Hall C Polarimetry at 12 GeV

Dave Gaskell

Hall C Users Meeting

January 14, 2012

1. Møller Polarimeter
2. Compton Polarimeter

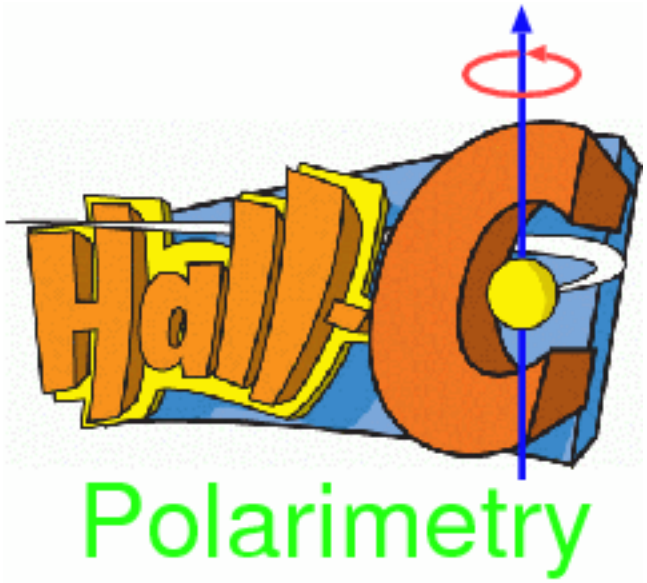

Hall C 12 GeV Polarimetry

Møller Polarimeter

→ 6 GeV operation: uses 2 quads to focus Møller events on detector plane, systematic error dP/P < 1% at low currents

→ 11 GeV operation requires additional quad, modified optics, systematic error may be slightly larger (still under evaluation)

→ Møller polarimeter will be ready from day 1 (October 2014)

Compton Polarimeter

→ Newly installed for Q_{Weak} – similar to Hall A system (Fabry Perot cavity, diamond strip electron detector, photon detector) – electron detector analysis should yield dP/P<1%

→ 11 GeV operation requires changes to dipole chicane

57 cm deflection → 13 cm

→ Assuming same laser system (1700 W green) and similar backgrounds in electron detector, 1% measurement in <30 minutes at 11 GeV (10 μA)

→ Design work just began for upgrade – Compton may not be ready for first beam – depends on scope of work, etc.

Basel-Hall C Møller Polarimeter

- 2 quadrupole optics maintains constant tune at detector plane, independent of beam energy
- "Moderate" (compared to Hall A) acceptance mitigates Levchuk effect → still a non-trivial source of uncertainty
- Target = pure Fe foil, brute-force polarized out of plane with 3-4 T superconducting magnet
- Total systematic uncertainty = ***0.47%*** *[NIM A 462 (2001) 382]*

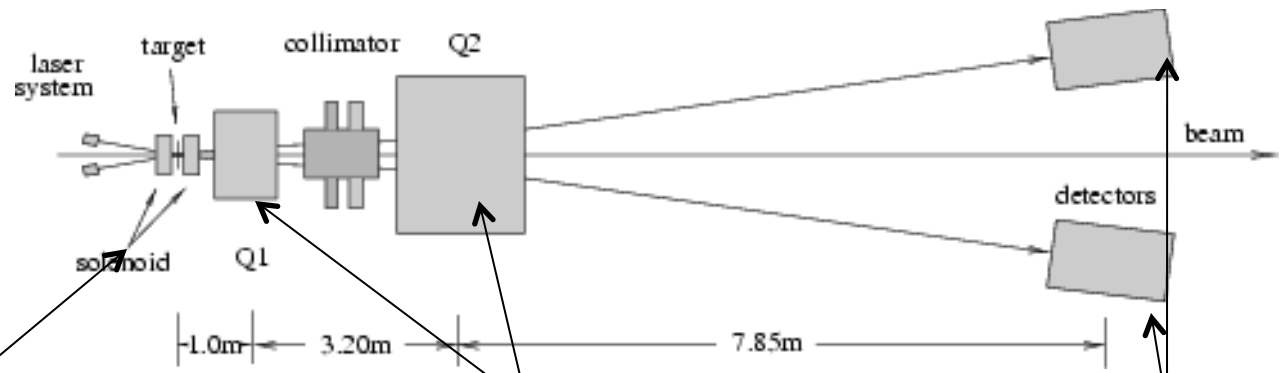

Superconducting solenoid

Quads for steering Møller events to detectors

Lead-glass electron detectors

Møller Optics

Q1 – horizontally focusing
vertically defocusing

Q2 – horizontally defocusing
vertically focusing

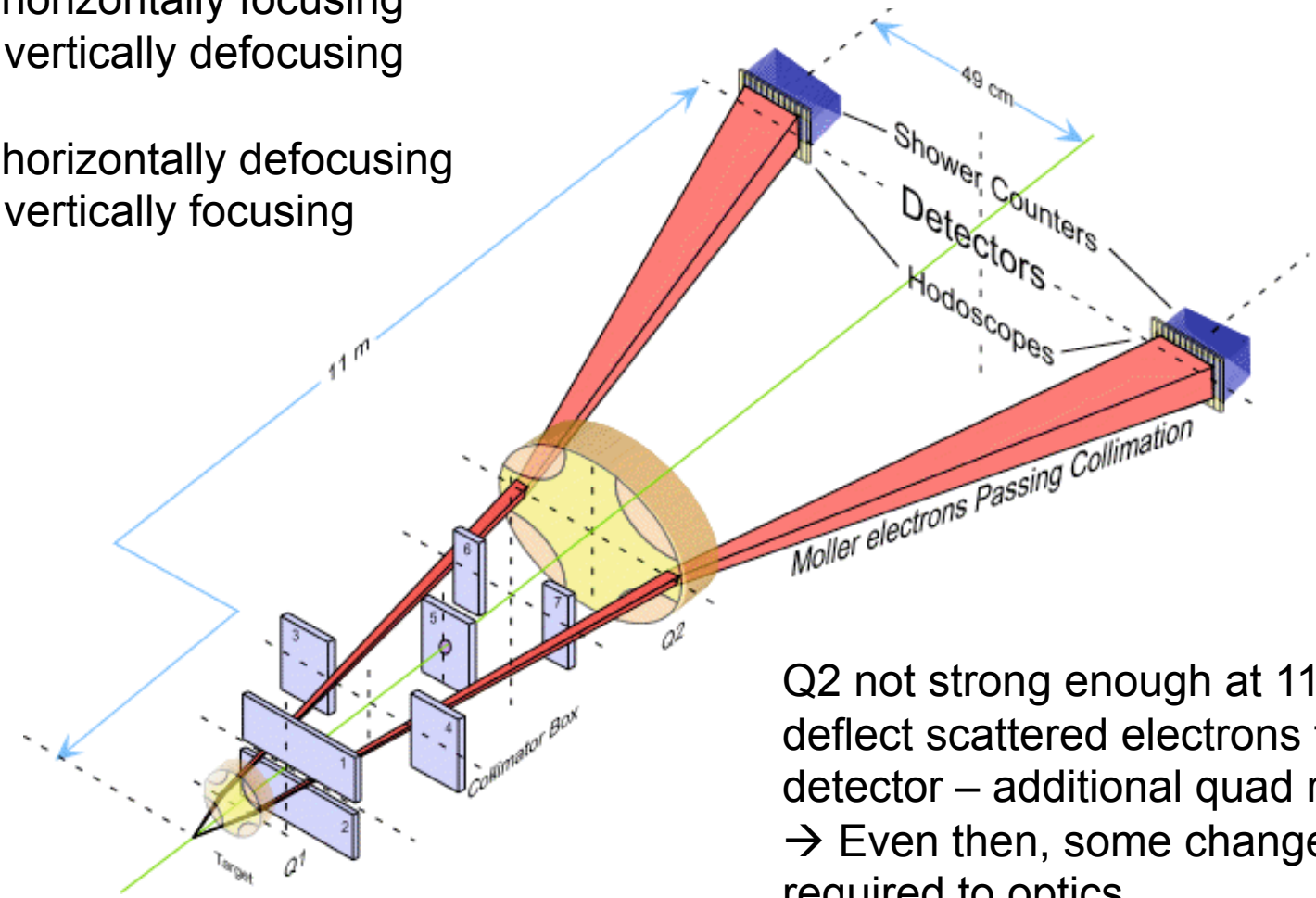

Q2 not strong enough at 11 GeV to deflect scattered electrons to detector – additional quad required → Even then, some changes required to optics

Fig. courtesy H. Fenker

Møller Tune at 6 GeV

Quads focus Møller events in an ellipse at detector plane

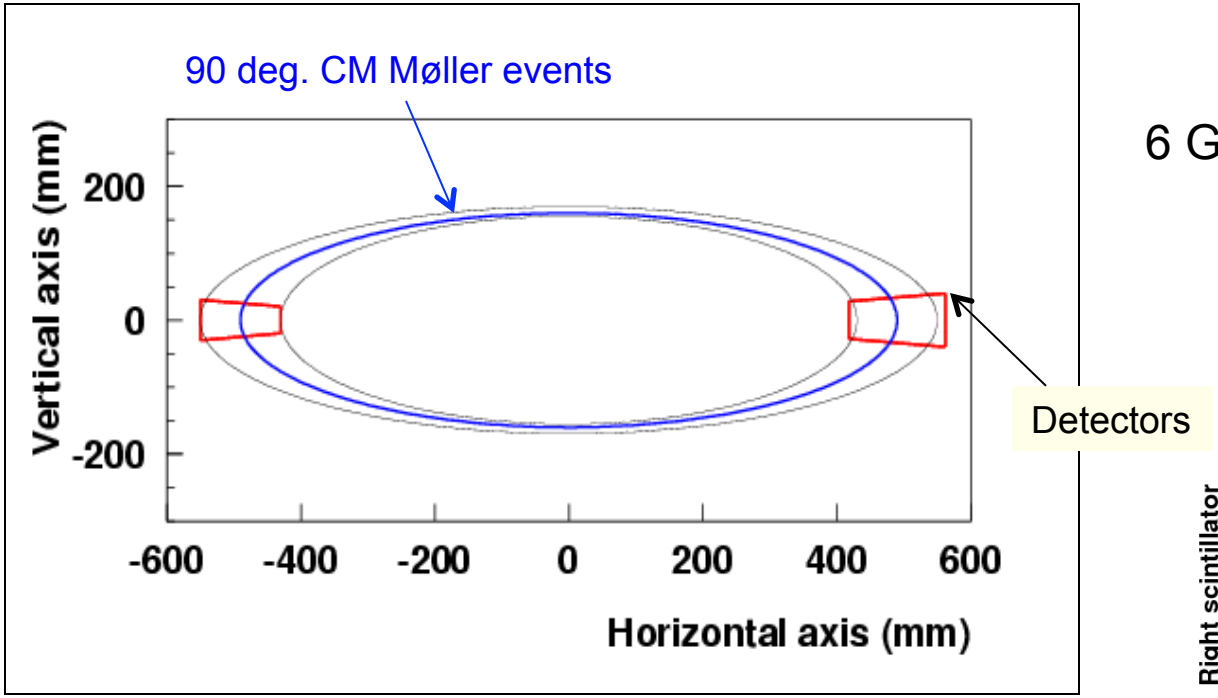

6 GeV: Δx=49 cm Δy=16 cm

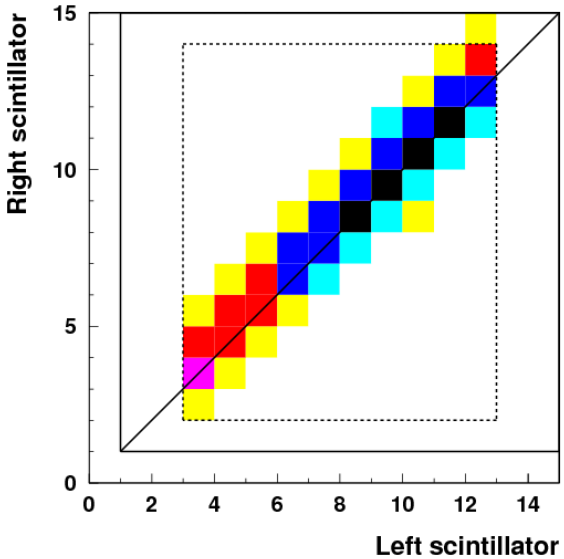

Quad settings verified by plotting x-coordinate at right detector vs. x-coordinate at left detector for coincidences

Møller Tune at 11 GeV

11 GeV tune requires a “squashed” ellipse

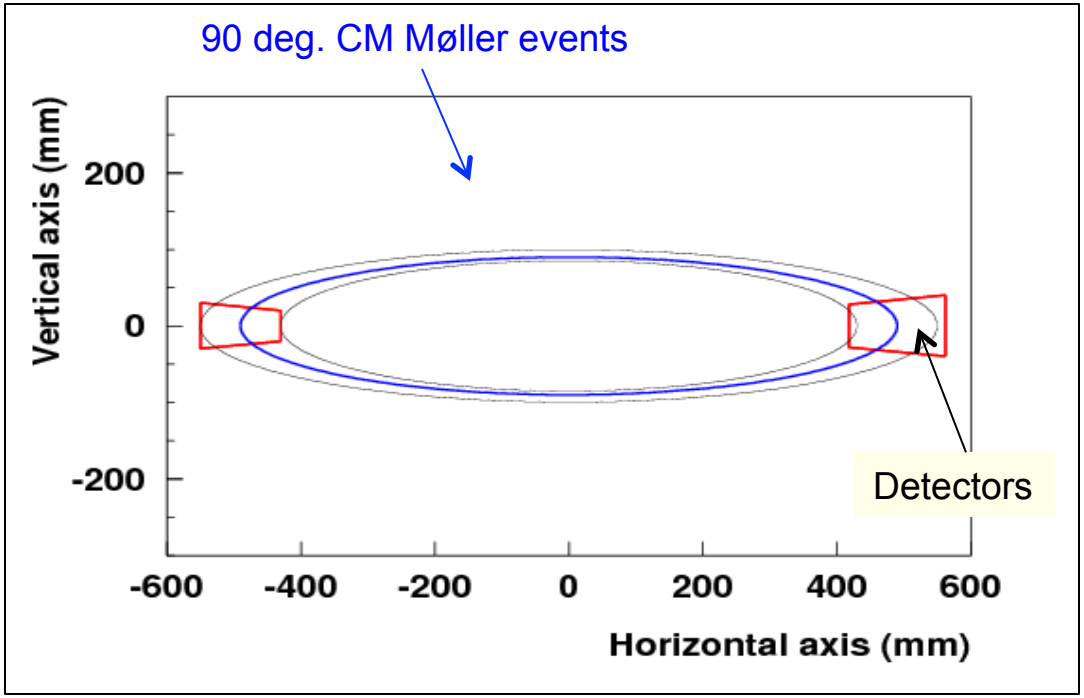

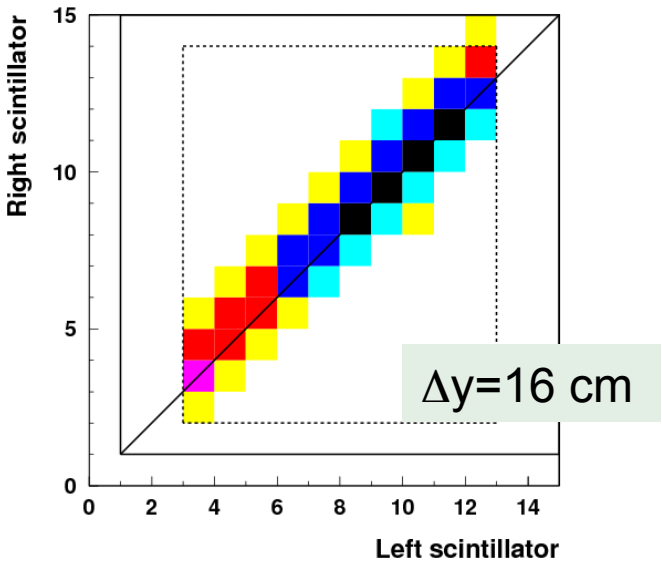

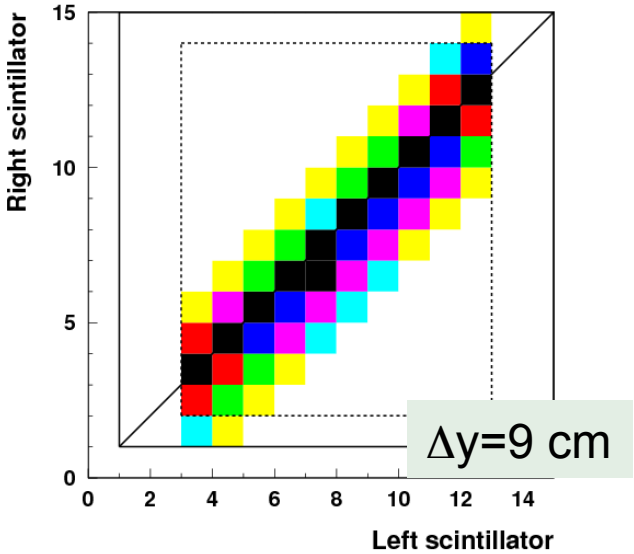

6 GeV: Δx=49 cm Δy=9 cm

Reducing vertical size of ellipse yields reduced precision in empirical determination/verification of quad optics

Møller Reconfiguration

Re-design of the Møller required to make it "12 GeV" ready

→ 2nd quad does not have sufficient strength to bend electrons onto detector plane at 11 GeV

→ Inserted additional large quad to reach Δx=49 cm

→Region between first and second quads about 30 cm smaller

→Special pipe required so Møller events do not scrape exiting 3rd quad

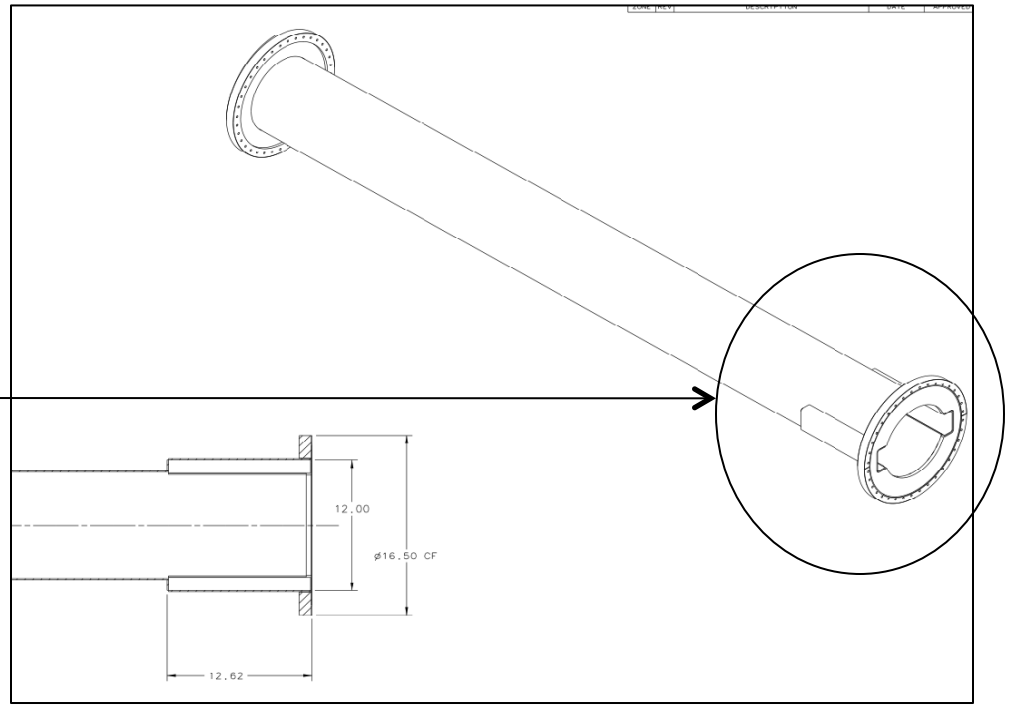

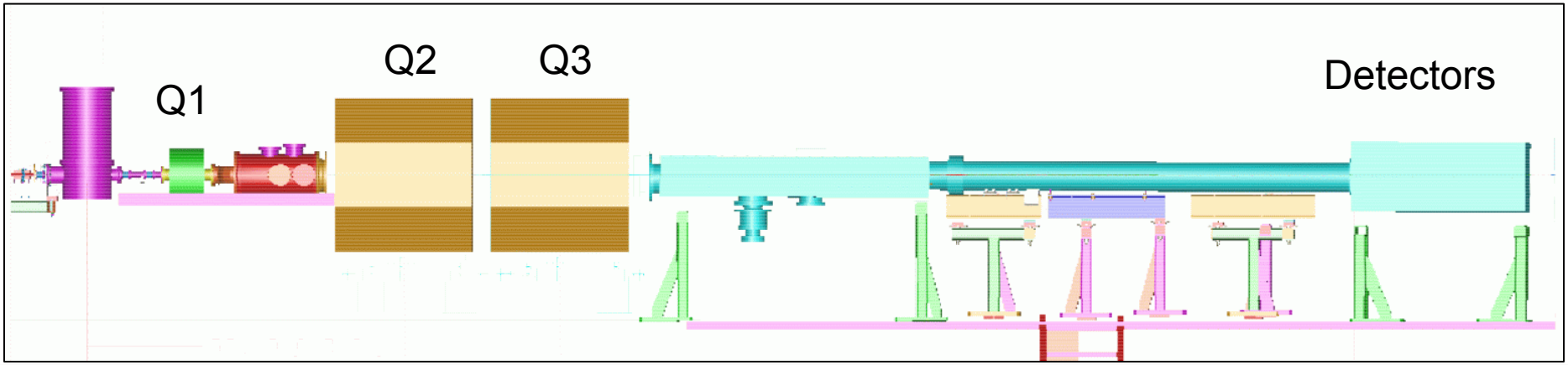

Movable Collimators

Movable collimators require some modification for 11 GeV operation
→ Minimum width of collimator 5, collimators 6-7 is +/- 25 mm
→ At 11 GeV, this will block otherwise good coincidence events
→ May not bother to modify collimator 5 – recent experience suggests it only increases backgrounds

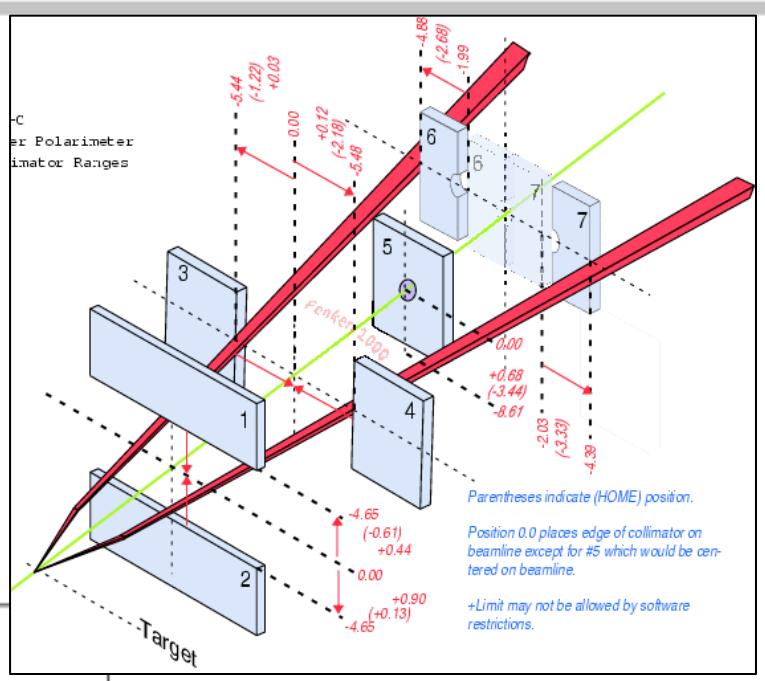

Movable collimators for reduction of backgrounds

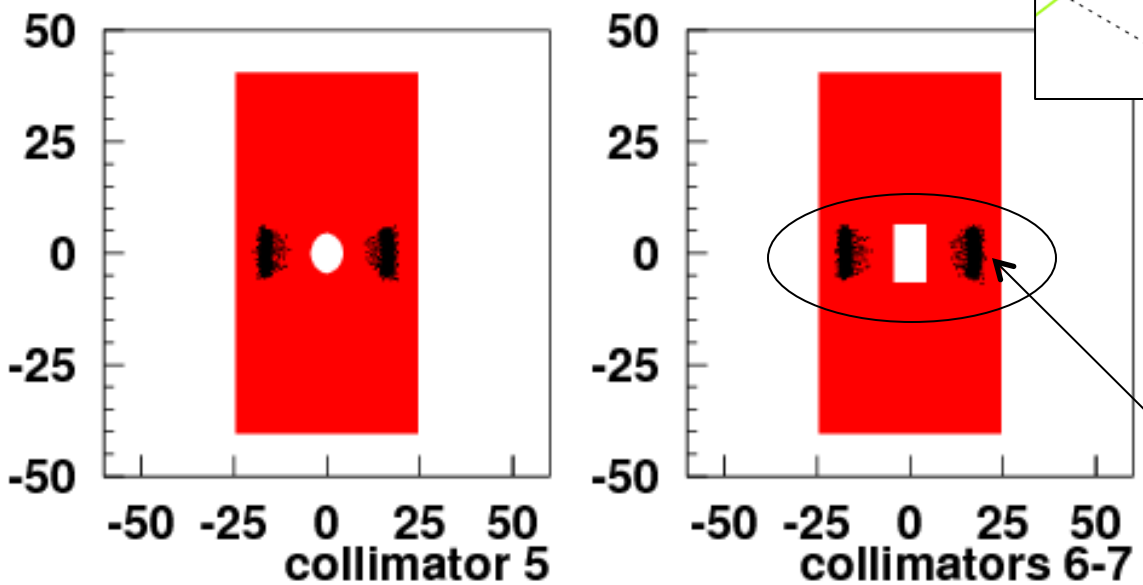

Accepted Møller coincidences at movable collimator location

Møller Q3 Problems

In spring, noticed Møller tune not always reproducible → cycling the quad did not help

→Rates also somewhat erratic
Nominal = 16 kHz/μA, sometimes as low as 12 kHz/μA

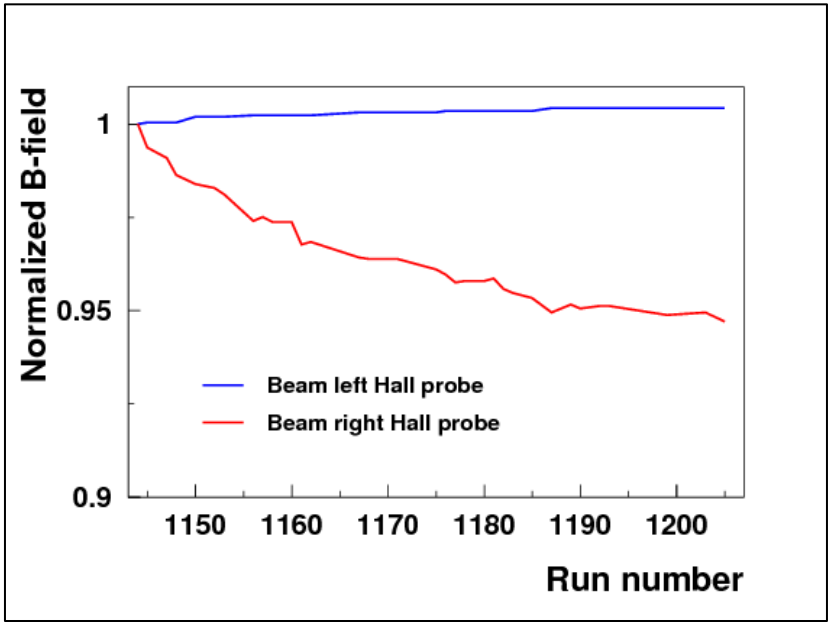

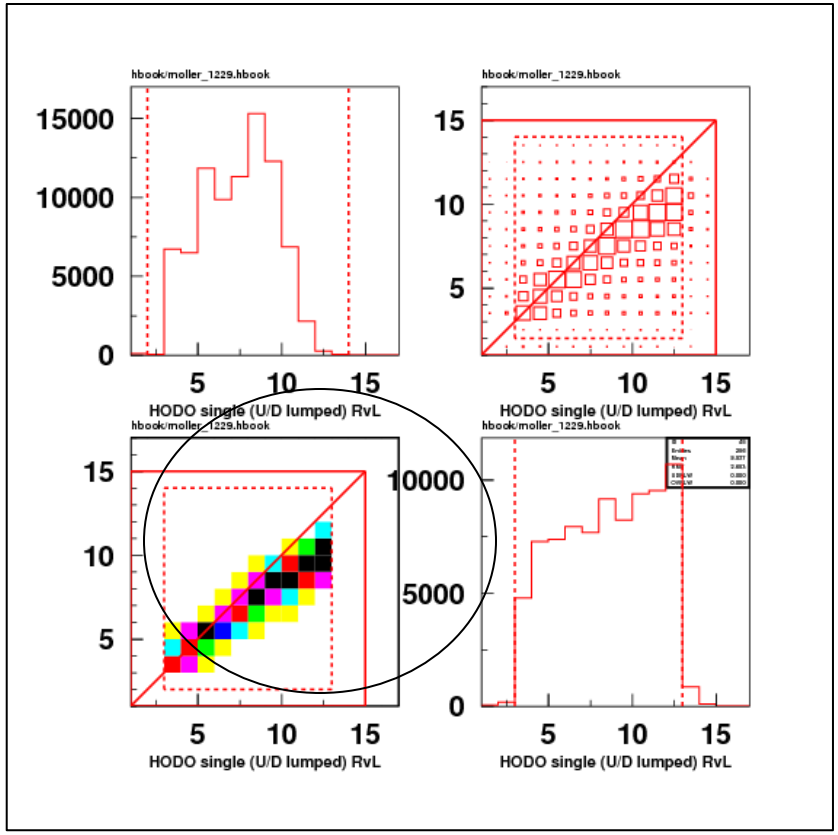

Installed Hall probes in Q3 → found field on beam right side unstable

Møller Q3 Problems

Diagnosis during 6 MSD revealed short in one set of coils

→ Almost all coils "sick" – not surprising since they are about 40 (?) years old

→ 11GeV will require running quads at nearly absolute maximum current

→ New coils will be fabricated before start of 12 GeV running

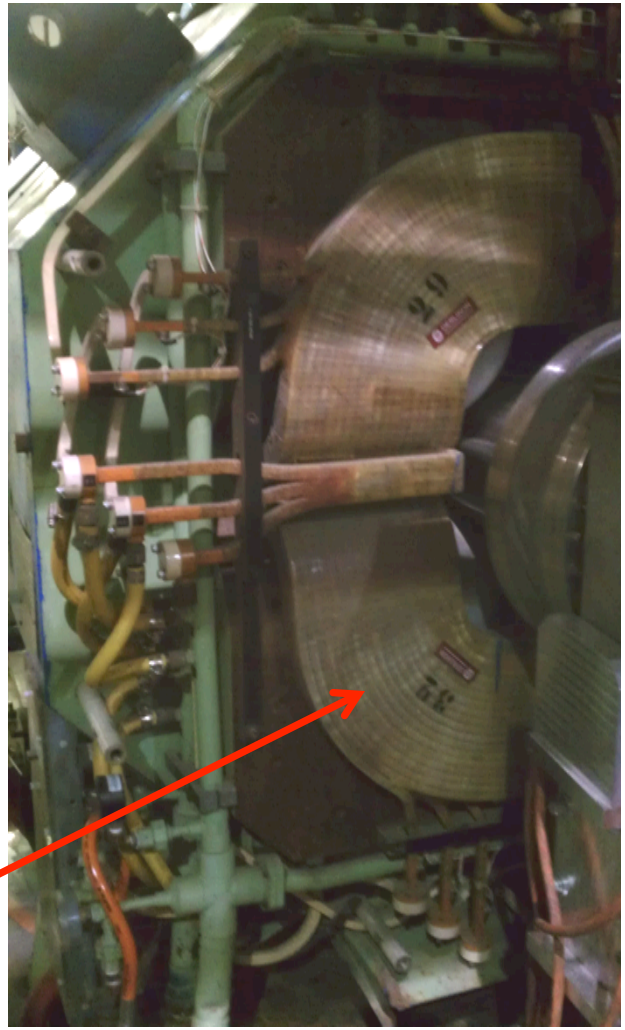

Hall C Møller Systematics - Q_{Weak}

Predicted systematic error budget for Q_{Weak} with new Møller configuration

→low current running only

→applies to a particular measurement, not polarization for the experiment

dP/P = 0.57%

Source	Uncertainty	dAsy./Asy. (%)
Beam position x	0.5 mm	**0.32**
Beam position y	0.5 mm	0.02
Beam direction x	0.15 mr	0.02
Beam direction y	0.15 mr	0.01
Q1 current	2%	0.10
Q2 current	1%	0.17
Q2 position	1 mm	0.18
Multiple Scattering	10%	0.01
Levchuk effect	10%	**0.20**
Collimator positions	0.5 mm	0.06
Target temperature	50%	0.05
B-field direction	2°	**0.14**
B-field strength	5%	0.03
Spin polarization in Fe		**0.25**
Elec. D.T.	100%	0.04
Solenoid focusing	100%	0.10
Total		***0.57***

Hall C Møller Systematics - 11 GeV

Nearly all systematic errors will remain the same with the exception of the uncertainty due to the quad currents

→ Requires more MC study to determine how well we can determine the correct quad currents empirically

→ Alternately, we can try to get better field map data

→ Uncertainties are likely overestimated anyway – ignores correlations in setting of Q1 vs. Q2

Source	Uncertainty	dAsy./Asy. (%)
Beam position x	0.5 mm	**0.32**
Beam position y	0.5 mm	0.02
Beam direction x	0.15 mr	0.02
Beam direction y	0.15 mr	0.01
Q1 current	2% (?)	0.10
Q2 + Q3 current	1% (?)	0.17
Q2 position	1 mm	0.18
Multiple Scattering	10%	0.01
Levchuk effect	10%	**0.20**
Collimator positions	0.5 mm	0.06
Target temperature	50%	0.05
B-field direction	2°	**0.14**
B-field strength	5%	0.03
Spin polarization in Fe		**0.25**
Elec. D.T.	100%	0.04
Solenoid focusing	100%	0.10
Total		***0.57 (?)***

Møller Upgrade Summary

- Additional quad to achieve 11 GeV
  - Can use “2 quad” system up to 6.5 GeV
  - 3 quads required for E>6.5 GeV → optics also slightly different
  - New coils will be fabricated
- Modified beam pipe with “wings” to avoid scraping at Q3 exit
- Moveable collimators must be modified (collimator 5, and 6&7)
- Final systematic error still under evaluation – I do not expect it to be much worse

Hall C Compton Polarimeter

Compton polarimeter provides:

→Continuous, non-destructive measurement of polarization under experiment running conditions

→ Independent cross-check of Møller polarimeter

Components

1. Laser: Low gain (~100-200) cavity pumped with 10 W green laser
2. Photon Detector: Lead-tungstate detector operated in integrating mode
3. Electron Detector: Diamond strip detector
4. Dipole chicane and beamline modifications

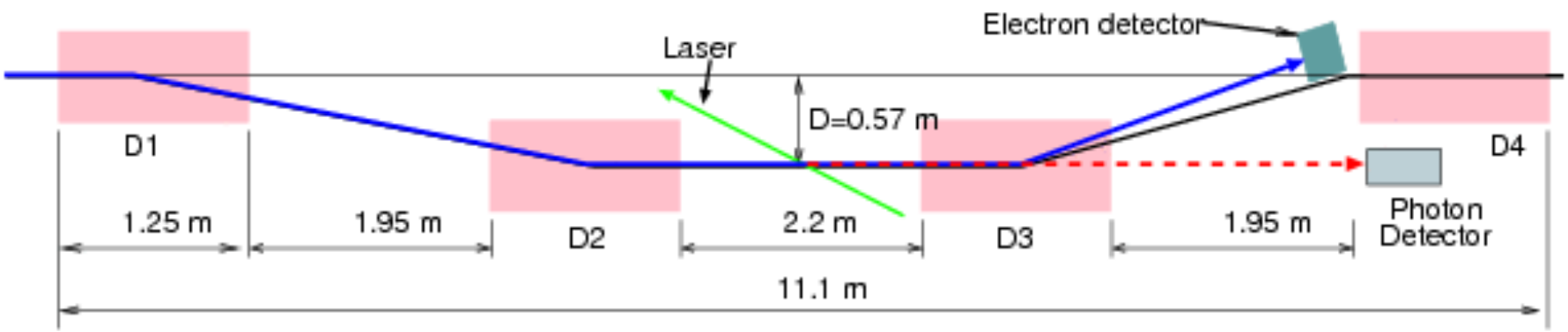

Compton Polarimeter - 11 GeV

1. Laser: new laser system with larger apertures in interaction region desirable, but existing laser system should be “ok”
2. Photon Detector: new geometry may pose challenges for photon detector
3. Electron Detector: Diamond strip detector (no major changes)
4. Dipole chicane: this will require significant modifications

   → New poles for dipoles (exist)

   → Vertical deflection will be reduced from 57 cm to 13 cm

   → New chamber for electron detector (modify old chamber?)

Design work started December 2011

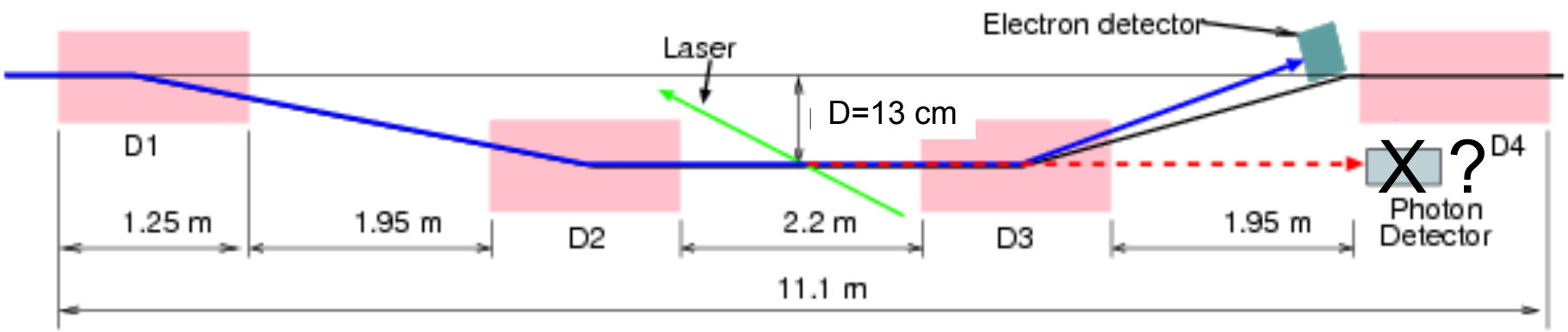

12 GeV Compton: Schedule (?)

	Name	Start	Finish
1	Compton Upgrade	12/1/11 8:00 AM	12/31/14 5:00 PM
2	Chicane Design	1/4/12 8:00 AM	9/28/12 5:00 PM
3	Procurement and Fab...	10/1/12 7:00 AM	10/1/13 5:00 PM
4	Installation	10/2/13 7:00 AM	3/31/14 5:00 PM
5	Accelerator Run IV	5/1/14 7:00 AM	10/31/14 5:00 PM
6	SHMS Commissioning...	9/2/14 7:00 AM	9/8/14 5:00 PM

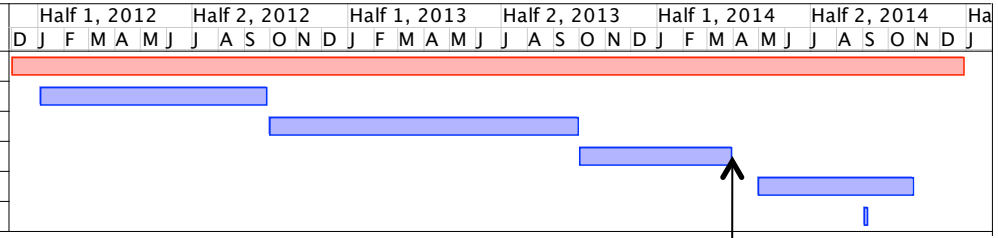

Slightly outdated – see Arne's talk yesterday: Accelerator Run IV is now later b/c 12 month down is assumed to be 16 months

March 31, 2014

Working Compton by start of Hall C 12 GeV program seems feasible assuming:

1. Minimum scope: no modifications to laser system or interaction region
2. Availability of funding for needed procurements starting October 2013
3. Installation manpower available → other beamline work also required. Can Compton + beamline get done all at once?

Compton Polarimeter at 12 GeV

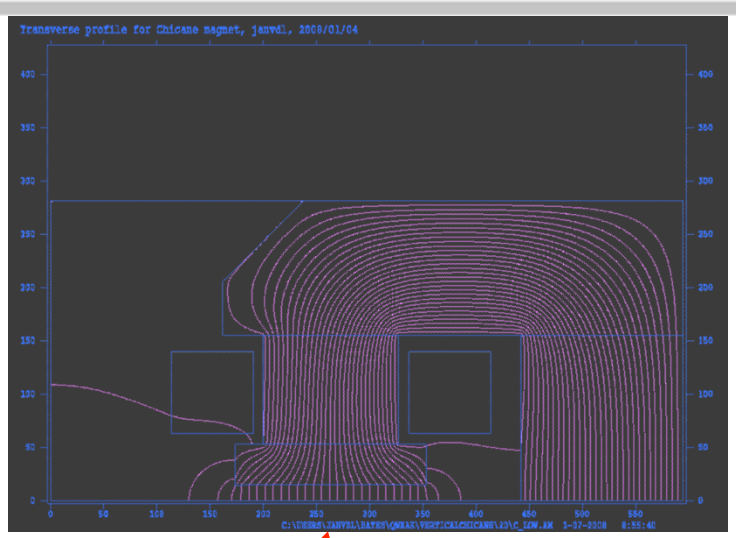

Operation at 11 GeV requires:

1. Changing chicane geometry
   → 57 cm drop becomes 13 cm
2. New poles for dipole (already exist)

Low energy poles: nominal field = 5.5 kG

High energy poles: field=12 kG

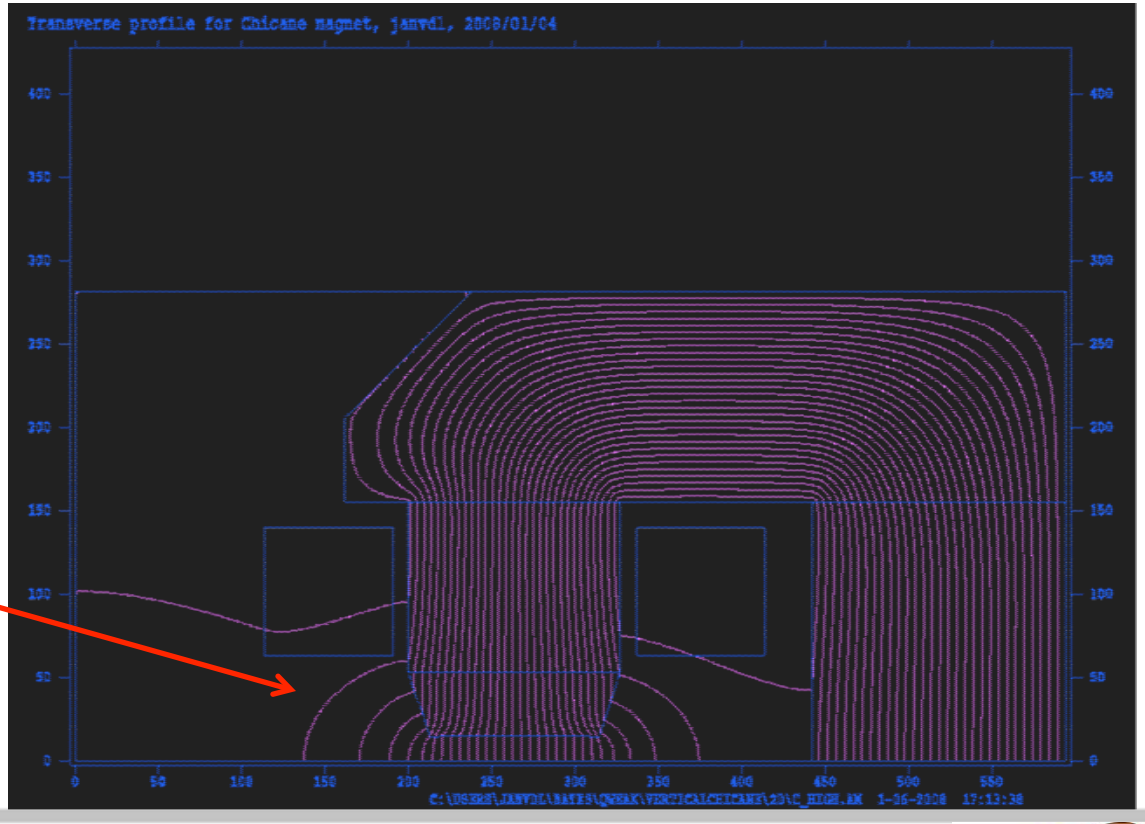

Compton Electron Detector

Beam polarization extracted by fitting shape of measured Compton spectrum to theoretical spectrum

→ Requires clean identification of end-point strip
→Fit has 2 free parameters:
- -Electron polarization
- -Geometrical factor → effective strip pitch

→ This technique works best when the asymmetry "zero-crossing" is in the detector acceptance

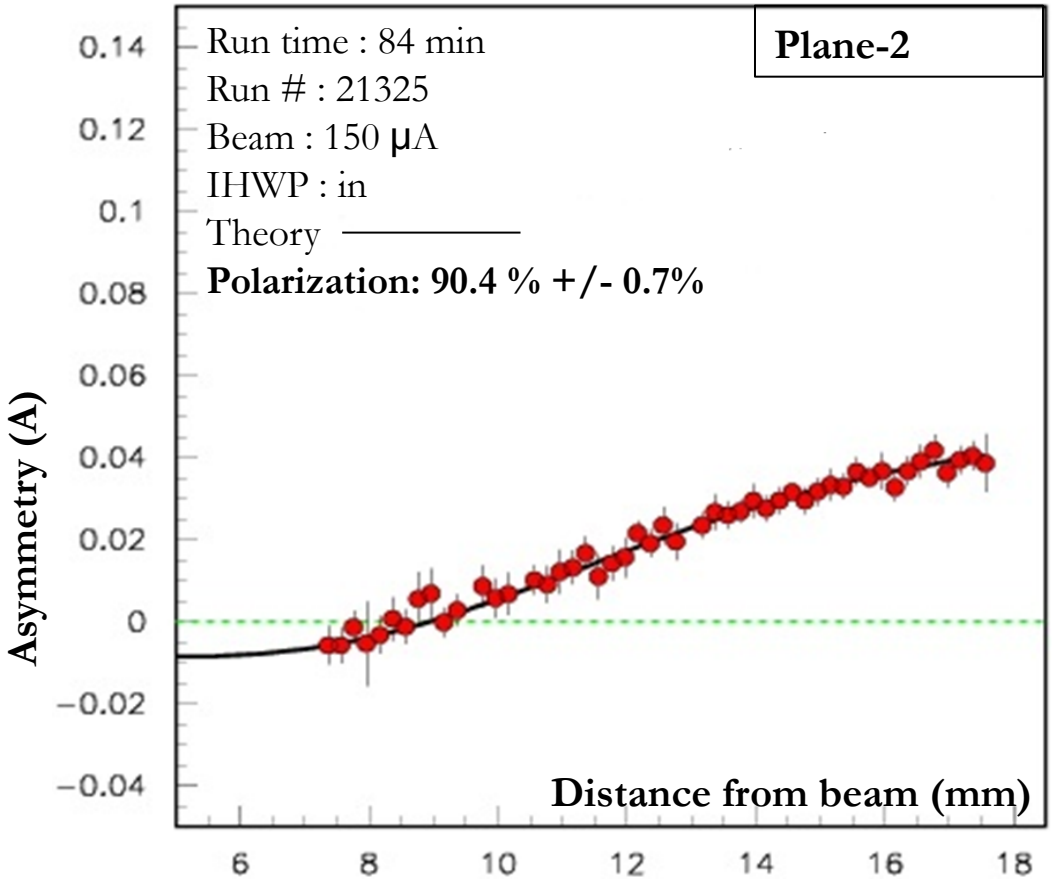

Assuming backgrounds comparable to Qweak (??) – zero-crossing should be measureable down to ~ 3 GeV

Compton Electron Detector

- Asymmetry zero-crossing at ~ 2 cm at 11 GeV
- Zero-crossing ~ 5.5 mm at 3 GeV (Q-Weak = 7 mm)
  - This is likely the absolute limit
- Alternatively, fit 2nd geometrical factor at high energy, apply at low energy → only works if we can constrain the dipole field independently

Scattered electron deflections for 12 GeV configuration

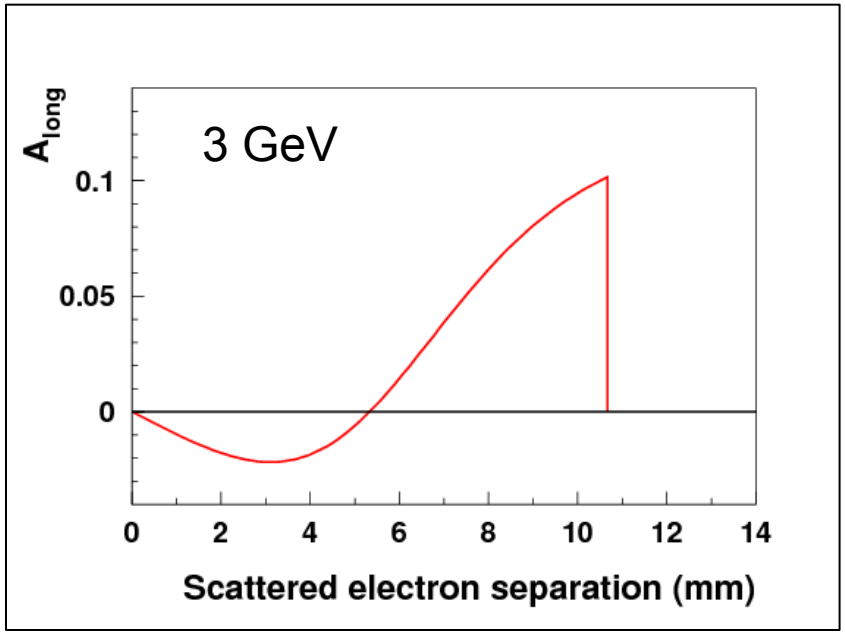

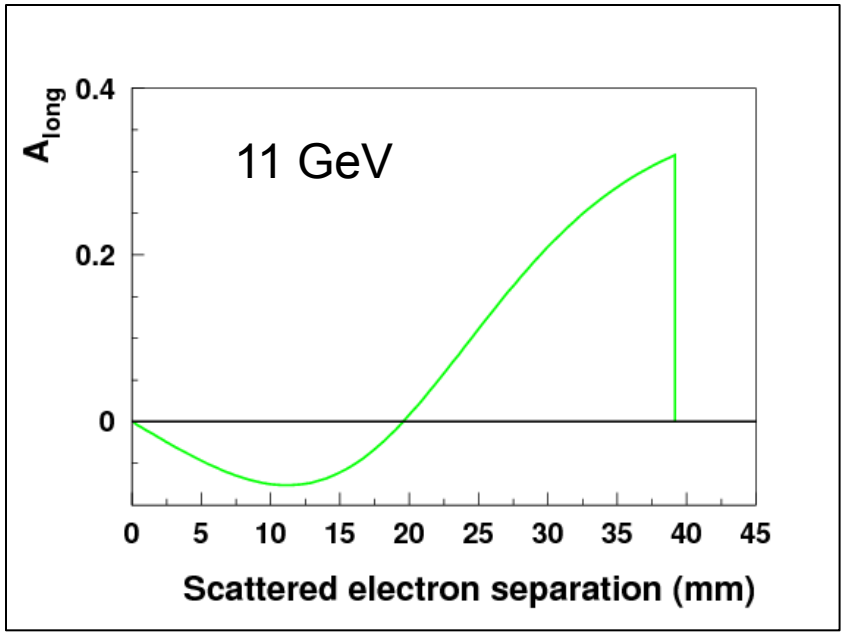

Compton Upgrade Summary

- Operation of Compton at 11 GeV requires smaller electron beam deflection: 57 cm → 13 cm
- Significant design and installation effort required to accommodate smaller deflection
  - New stands for dipoles 2 and 3
  - New vacuum pipes between dipoles, new electron detector chamber (?)
- Electron detector should have full functionality down to 3 GeV
  - Systematic errors in 11 GeV configuration should be similar to whatever we end up achieving for Q_{Weak}
- Minimal space for photon detector – may need new, more compact option

Additional upgrades to Compton?

- Changes to Compton described in previous slides are the "minimum" required for 11 GeV functionality
- If you desire further changes, fell free to offer suggestions
- Laser is one obvious sub-system that likely could benefit from further upgrades
- Possible laser system upgrades
  - RF pulsed one pass system → improved knowledge of P_{laser} via in-situ measurement?
  - Higher gain CW cavity
  - RF pulsed cavity
- Laser options above would offer good luminosity at larger crossing angle → smaller backgrounds due to larger apertures in interaction region

Extra

Halo, small apertures and backgrounds

Existing system uses narrow apertures to help protect cavity mirrors from
→Large beam related backgrounds
→Direct beam strikes

Large beam size, halo will result huge backgrounds from scraping on narrow apertures → ion chambers, machine protection system shuts off beam

This system has drawbacks → very small halos can still result in significant backgrounds

→ Halo may be small enough to run, but there still may be a lot of junk in your detectors

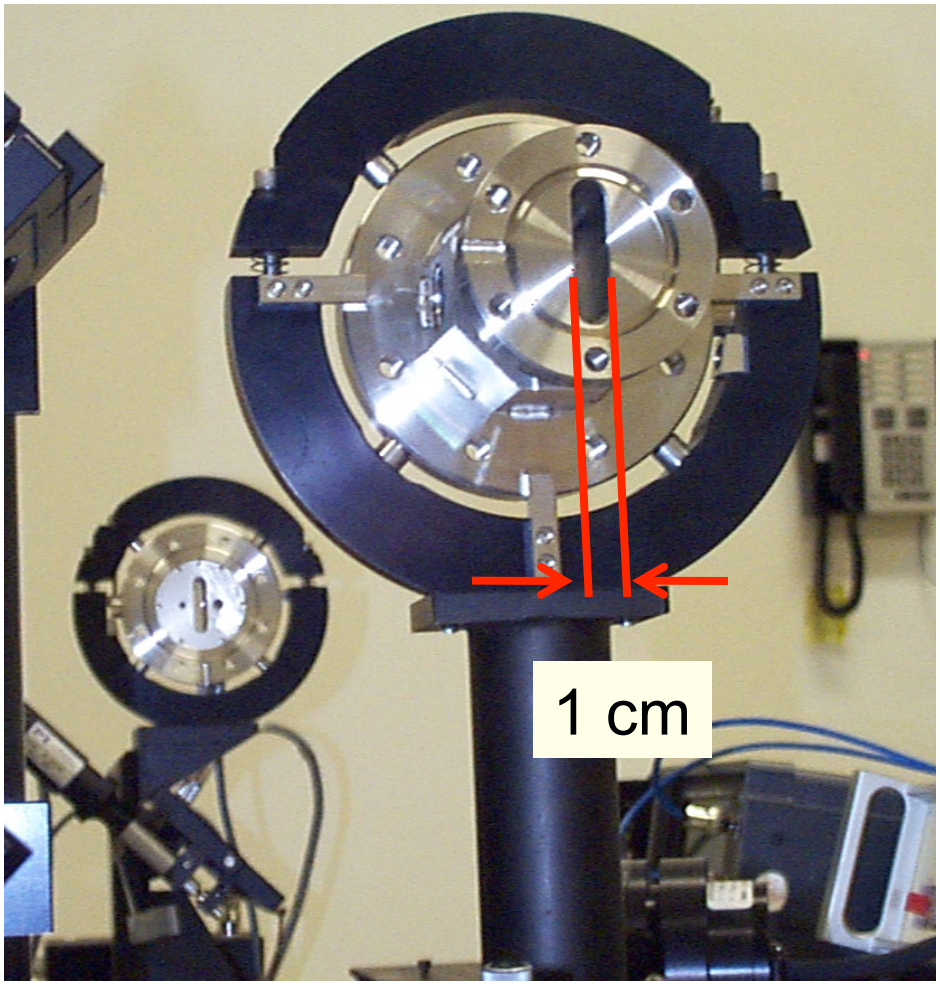

RF pulsed FP Cavity

JLab 12 GeV:

Control of beam halo, spot size likely worse

At 6 GeV, it already takes considerable effort to tune the beam for the Compton

Highly desirable to get mirrors further from beamline without reducing luminosity unduly

→This could be accomplished by switching from CW cavity, to RF pulsed cavity

→At non-zero crossing angle, luminosity larger, drops more slowly with crossing angle

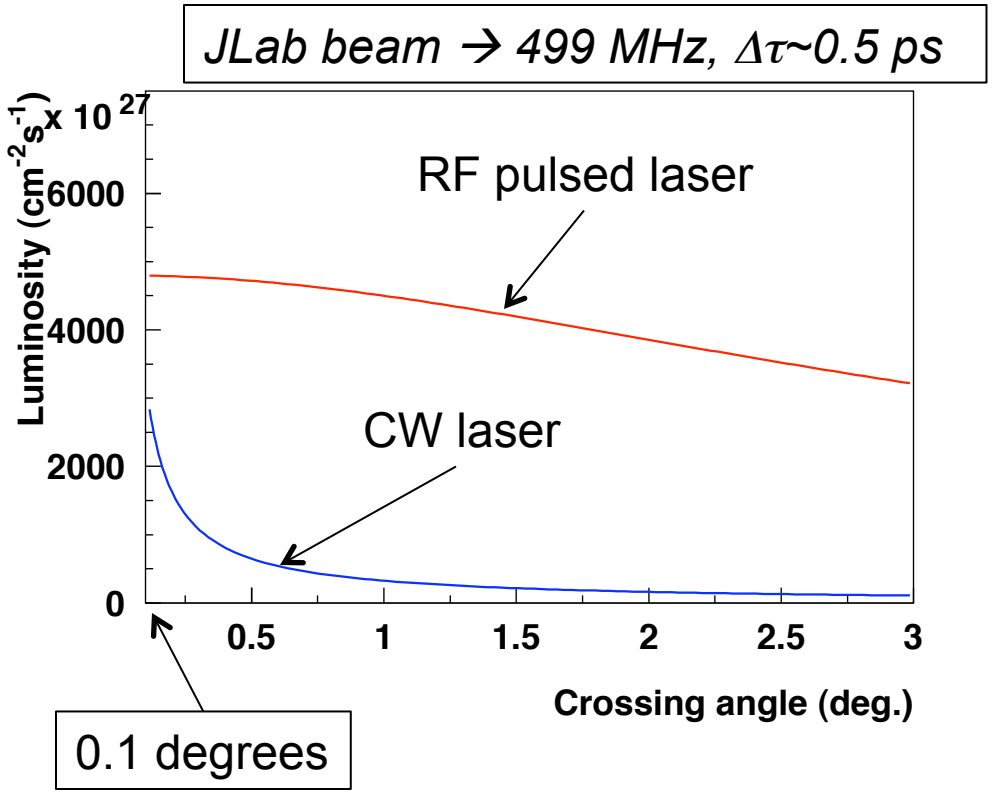

RF pulsed cavities have been built – this is a technology under development for ILC among other applications

Pulsed vs. CW FP Cavity

CW cavity resonance condition: $2L_{cavity} = n\,\lambda$

Additional condition for pulsed laser: $2L_{cavity} = n\,c/f_{RF}$

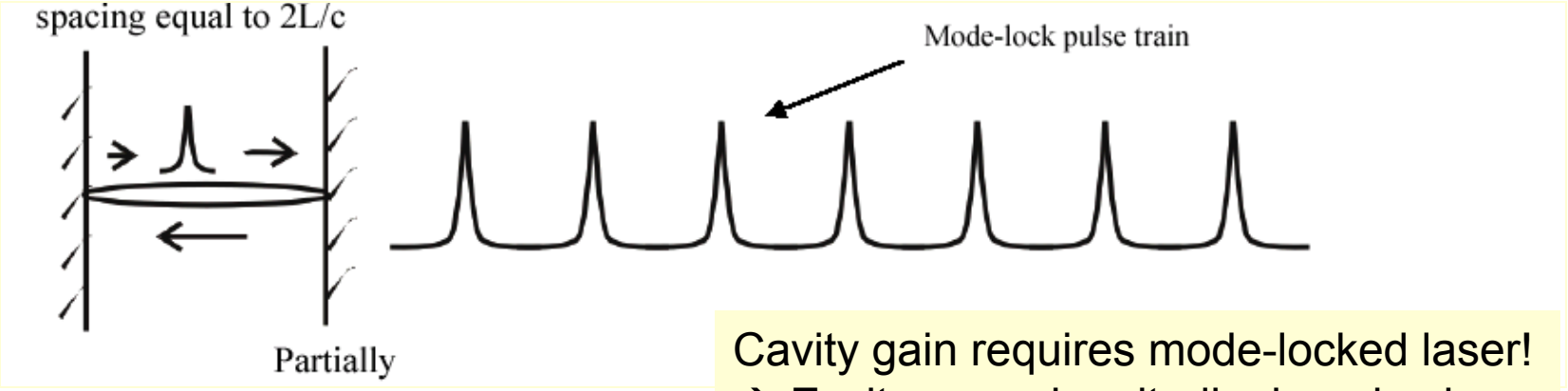

Cavity gain requires mode-locked laser!
→ Excite same longitudinal modes in FP cavity

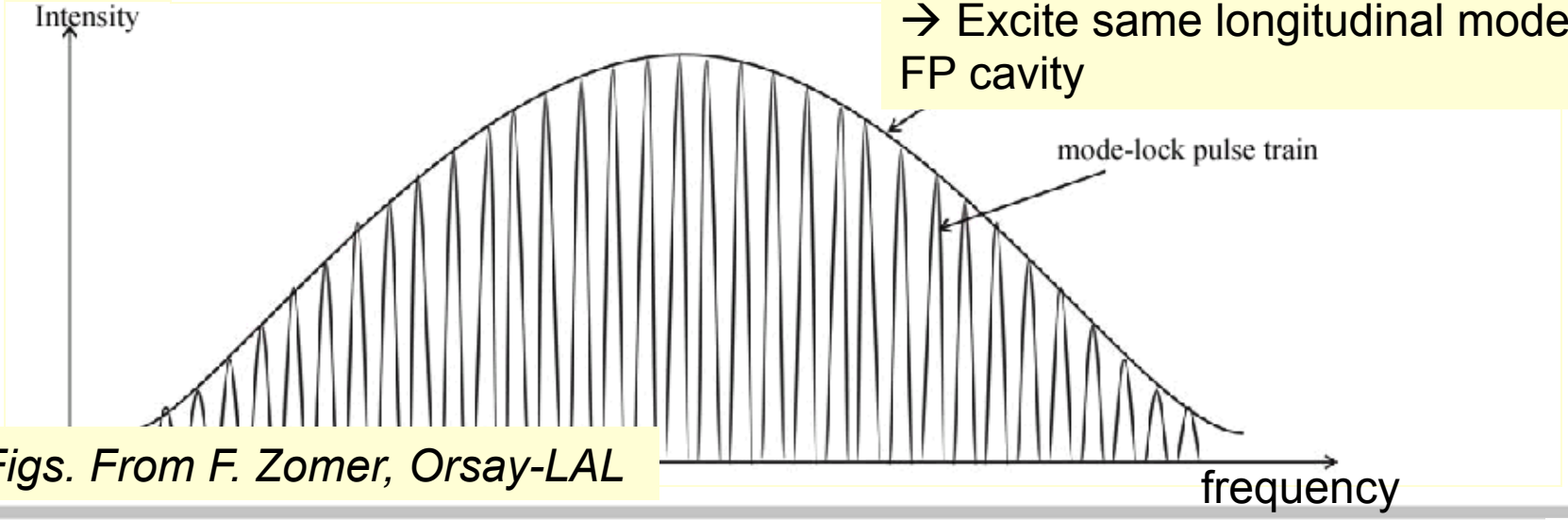

Figs. From F. Zomer, Orsay-LAL

Cavity Design Considerations

- In general – “low-finesse” (gain) cavities are easier than high-finesse
  - Better off if you can start with higher power laser (1 W better than 100 mW)
- Keep mirrors far from beamline
  - Naively, you can just make the cavity longer → same crossing angle, but mirrors further away
  - But, longer cavity results in smaller linewidth at fixed finesse → this may make locking more challenging
- RF pulsed system an intriguing solution
  - Extra degree of freedom in feedback, but has been demonstrated to work
  - Greater sensitivity to helicity correlated pathlength changes in the machine?

Electron Detector

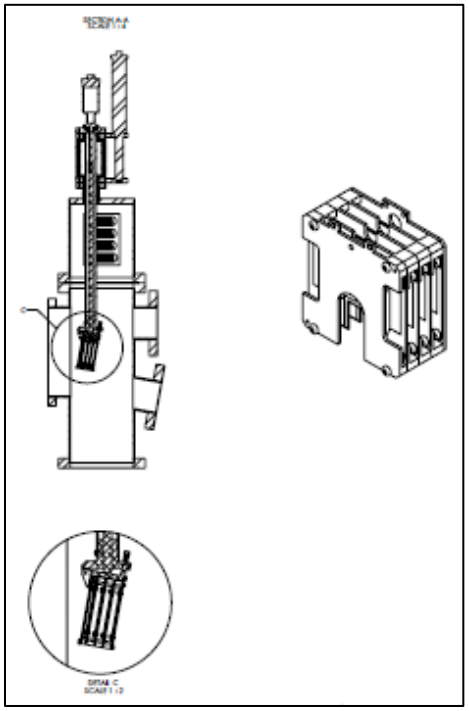

Diamond strip detector built by Miss. State, U. Winnipeg

→4 planes of 96 strips

→200 μm pitch

Key component (not shown): amplifier-discriminator electronics

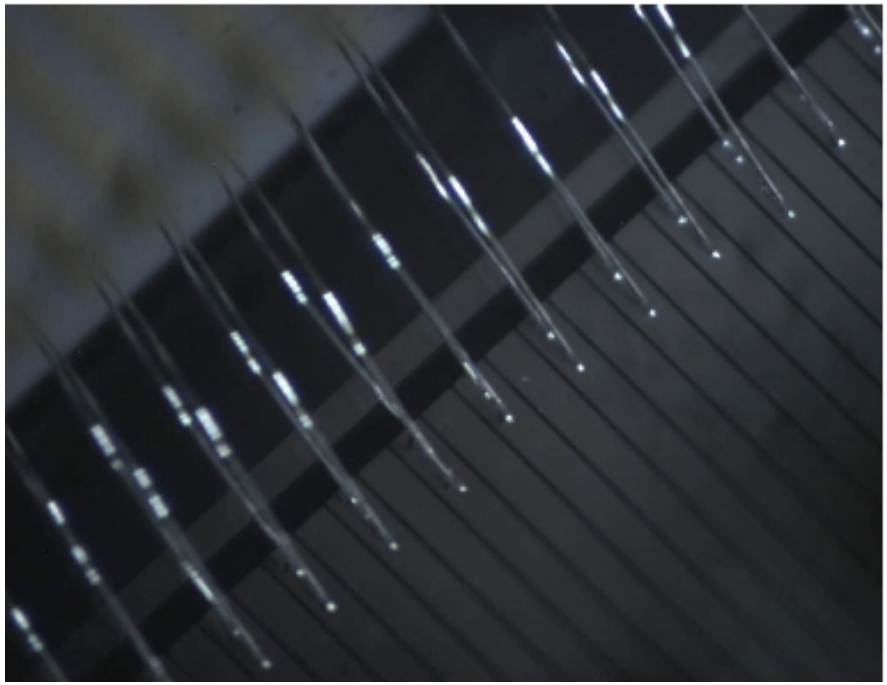

Readout using CAEN v1495 boards

→Should be able to read out either in event mode or in "scaler" mode

Laser and Low Gain Cavity

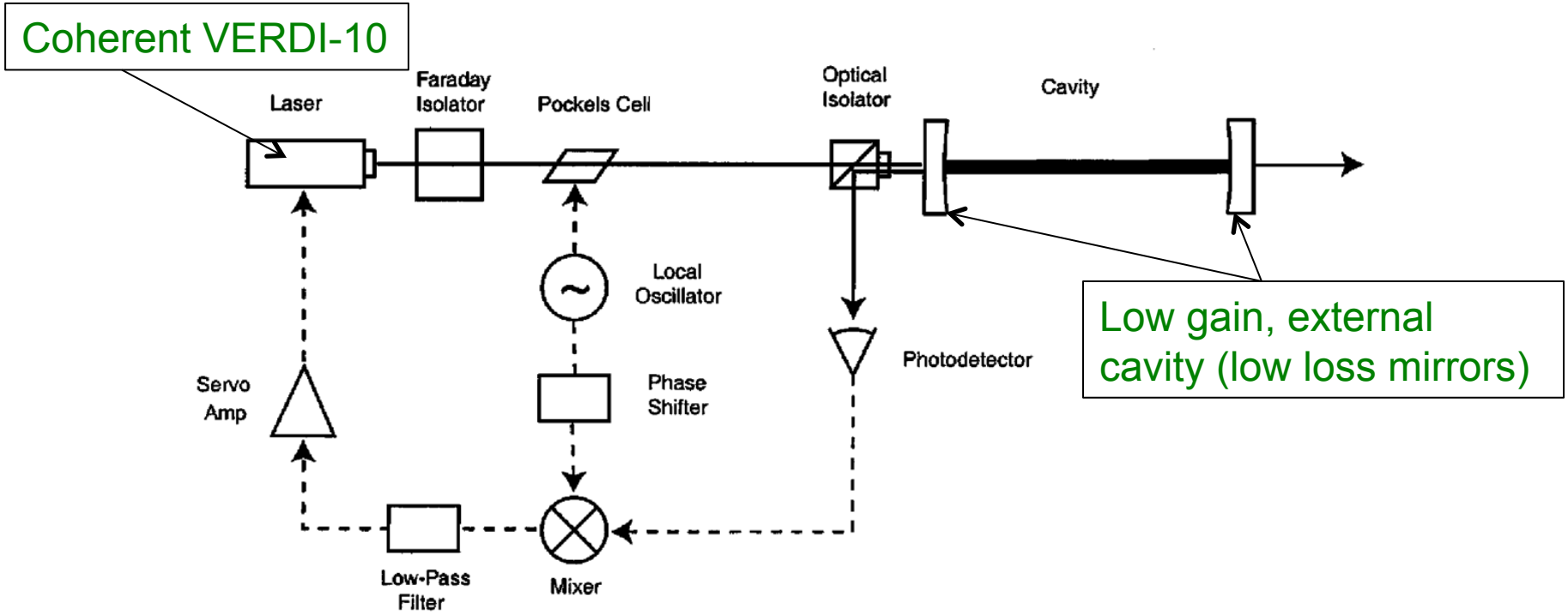

Hall C uses high power CW laser (10 W) @ 532 nm coupled to a low gain, external cavity → 1-2 kW of stored power

Laser locked to cavity using Pound-Drever-Hall (PDH) technique