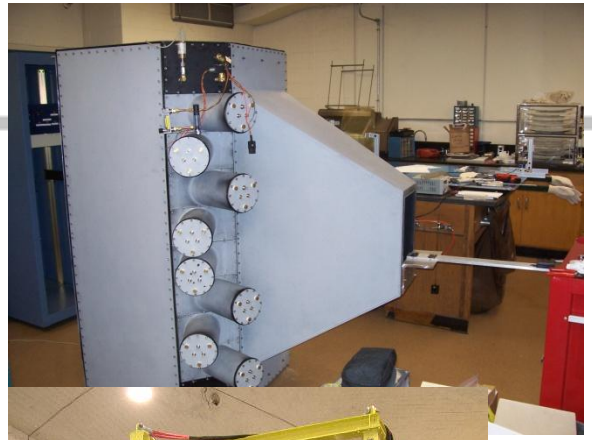

Users Meeting
January 24/25, 2013

Stephen Wood

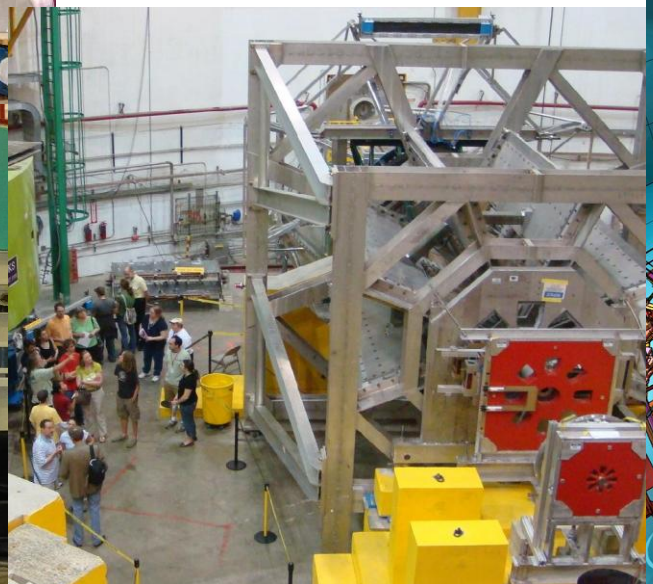

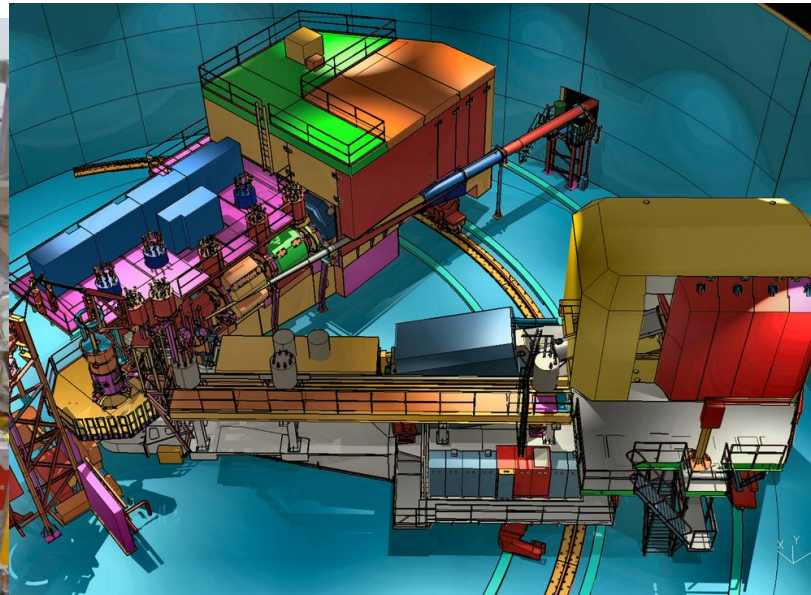

Changes in Hall

June 19, 2012

Changes in Hall

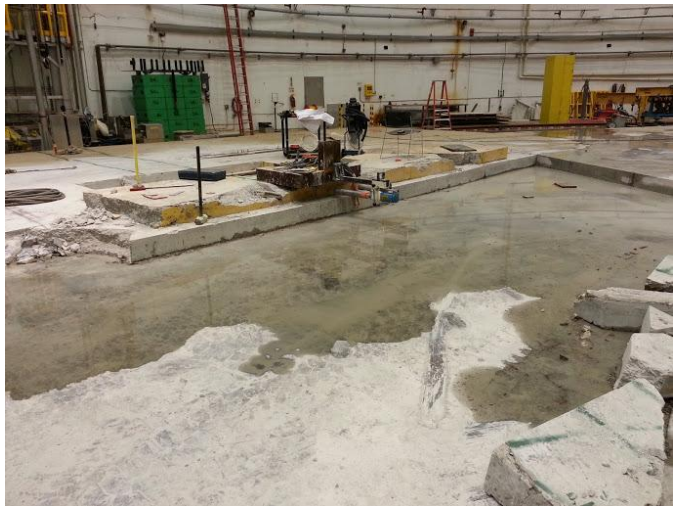

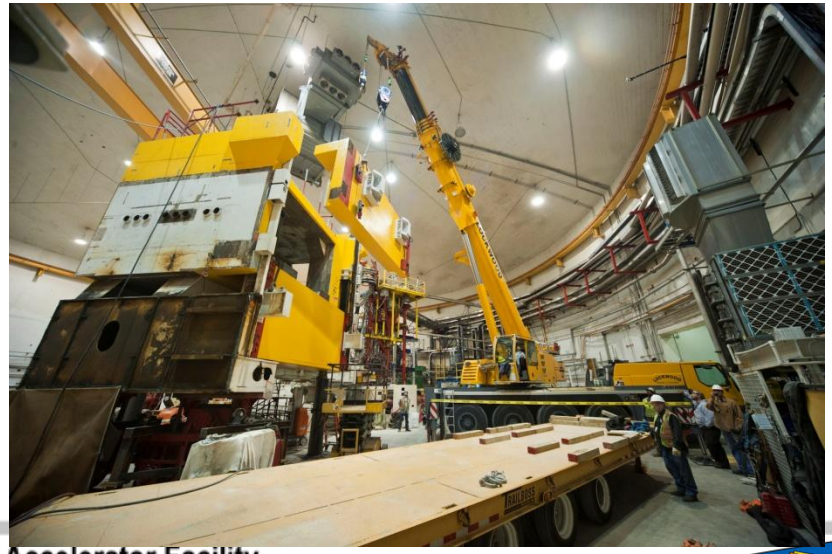

SOS Dipole removal

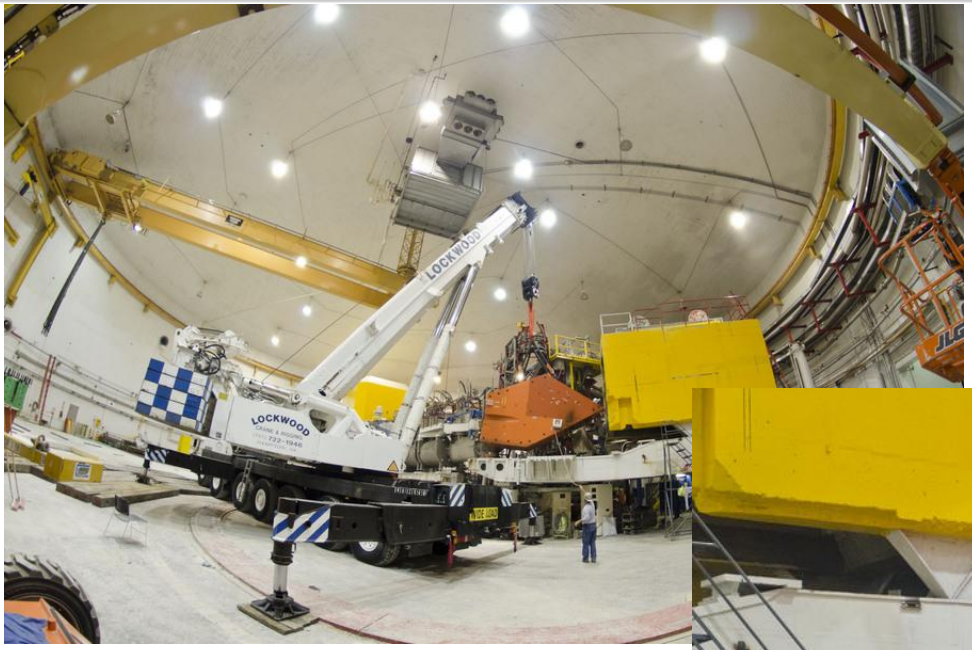

SOS Dipole removal

SHMS Rails

August 25, 2012 – Flash Flood

- Heavy rains fill hall to depth of 28”, ½ Olympic swimming pool
- Adequate truck ramp gates now exist
- Response:
  - Hall cleaned up
  - Material handling equipment repaired/replaced
  - Breakers/wall receptacles repaired
  - HMS signal cables being N2 flushed
  - 2 Danfisik supplies repaired (Compton + general purpose)
  - Repairs in racks remain
    - PSS/ODH system – (will start soon to support HMS cooldown)
    - Beamline controls
    - Target instrumentation
    - Some Compton/Moller instrumentation

Videos →

https://docs.google.com/open?id=0B6j-UjijD80OeDk2NW5nTVpYaGs
https://docs.google.com/open?id=0B6j-UjijD80ONjVremxydGFBLU0
https://docs.google.com/open?id=0B6j-UjijD80Ocms1NThGNHZFODg

Moller/Compton/Beamline Upgrade

- Detailed design work to prepare beamline for 12 GeV starting
  - Restore beamline between alcove and target
  - Modify Compton to accommodate 11 GeV beam
    - 57cm -> 13cm displacement
  - Acquire new coils for 2 large Moller quadrupoles, buy power supply
  - New Moller collimators, detector shielding
- See D. Gaskell slides in Jan 14 Hall C Meeting minutes

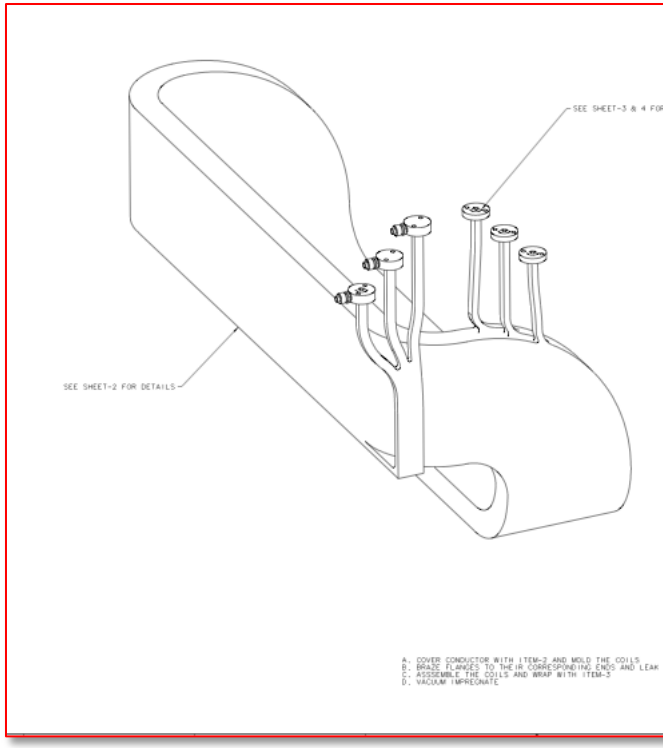

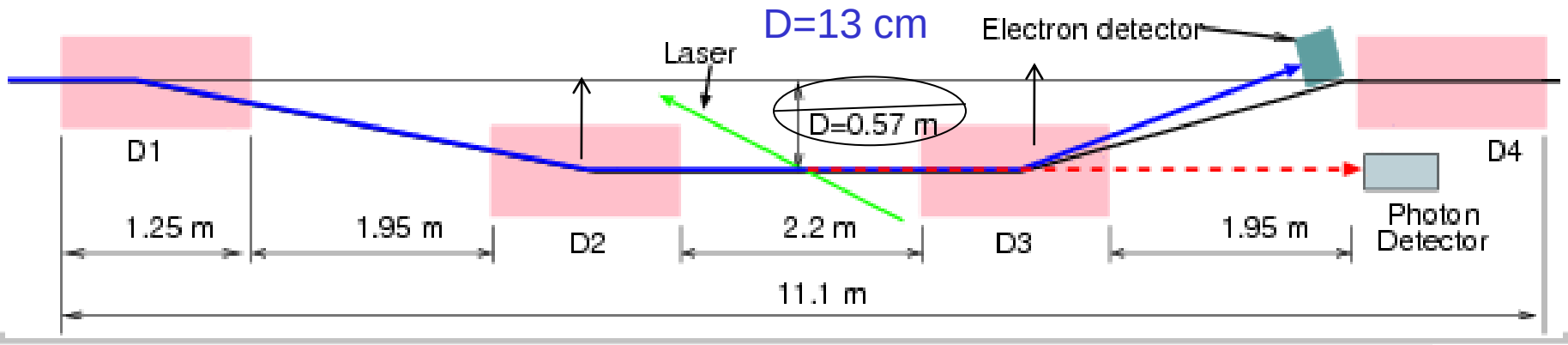

Publications in last year

E01-011	Observation of the $^{7}_{\Lambda}$He hyper nucleus by the (e,e'K+) reaction	PRL 110, 012502
E04-108 (GeP)	Polarization components in π^0 photoproduction at photon energies up to 5.6 GeV	PRL 108, 222004
G0	Measurement of the parity-violating asymmetry in inclusive electroproduction of π^- near the Δ^0 resonance	PRL 108, 122002
E02-019	New measurements of high-momentum nucleons and short-range structures in nuclei	PRL 108, 092502
E00-108	Semi-Inclusive Charged-Pion Electroproduction off Protons and Deuterons: Cross Sections, Ratios and Access to the Quark-Parton Model at Low Energies	PRC 85, 015202

Spinoffs

Impact of nuclear dependence of R=sL/ST on antishadowing in nuclear structure functions	PRC 86, 045201
A detailed study of the nuclear dependence of the EMC effect and short-range correlations	PRC 86, 065204

6 GeV Publication Status - I

Exp #	Topic	Done	Papers	Extra Papers	Notes
E94-110	(e,e') R	10/1999		P Elastic, spin offs	New Draft on Arxiv
E91-016	(e,e'K)	12/1999	PRL 12/2004 PRC 11/2007	Omega production	
E89-009	HNSS	5/2000	PRL 6/2003 PRC 4/2006		
E99-118	Nuclear R	7/2000		Proton and Deuteron	Needs radiative corrections work
E93-038	GeN (Madey)	4/2001	PRL 9/2003 PRC 2/2006	GeP/GmP	
E93-026B	GeN Poltar	12/2001	PRL 1/2004		
E01-006	RSS	3/2002	PRL 3/2007 PRL 9/2010		Possible Neutron SF
E00-002	F2N low Q2	5/2003	Draft		
E01-002	Baryon	6/2003	PRC 6/2009 PRC 9/2009		

6 GeV Publication Status - II

Exp #	Topic	Done	Papers	Extra Papers	Notes
E00-116	Intermediate Q2 duality	7/2003	PRC 9/2009	Neutron Duality spin off	
E01-004	Fpi – II	8/2003	PRL 10/2006 PRCx2 10/2008		
E00-108	Meson Duality	8/2003	PRL 1/2007 PRB 7/2008	PRC 1/12	
E00-006	G0 Forward	5/2004	PRL 8/2005 PRL 8/2007	Target NIM Global Analysis	
E02-019	X>1	11/2004	PRL 11/2010 PRL X/2012		
E03-103	EMC Effect	11/2004	PRL 11/2009	Drafting Heavy Target	
E93-008	J/Psi	12/2004	PRL 1/2009		
E01-107	Pi Transpareny	12/2004	PRL 9/2007 PRC 5/2010	Scaling study K Transp 7/11	
E01-011	HKS	11/2005	PRL 1/2013		More to come
E02-017	Photofission	12/2005	P of Atom 10/2010		

6 GeV Publication Status - III

Exp #	Topic	Done	Papers	Extra Papers	Notes
E02-017	Photofission	12/2005	P of Atom 10/2010		
	G0 Backward	3/2007	PRL 1/2010	NIM F+B 8/11 Trans Asy 7/11	Pi Asy Draft
E04-001	F2/R Nuclei	7/2007			Drafting
E05-017	2gamma	7/2007			
E06-009	F2/R Deut.	7/2007			Drafting
E04-019	GeP–2gamma	1/2008	PRL 3/11		
E07-002	RCS	1/2008			Student assigned
E04-108	GeP-III	6/2008	PRL 6/2010	PRL 5/2012 (π^0)	
E07-003	SANE	3/2009			
E05-115	HES/HKS	11/2009			
E08-016	Qweak	5/2012			

Approved and CA 12 GeV Hall C Experiments

Number	Experiment	Grade	Approved	Conditional	Equipment		
E12-06-101	Pion Form Factor	A	52				
E12-06-104	SIDIS R	A-	40				
E12-06-105	x>1	A-	32				
E12-06-121	He3 g_2	A-	29		Polarized He3 target		
E12-07-105	(e,e'pi)Exclusive Factoriza	A-	36				
E12-09-011	(e,e'K) Exclusive Factoriza	B+	40				
E12-09-017	SIDIS P_t	A-	32				
E12-09-002	Charge Symmetry Violatio	A-	22				
E12-10-002	F2 @ large x	B+	13				
E12-10-003	d(e,e'p)	B+	21				
E12-10-008	EMC	A-	23				
E12-06-107	Color Transparency	B+	26				
E12-06-110	He3 A1n	A	36		Polarized He3 target		
E12-11-002	He4(e,e'pol(p))	B+	37		Polarimeter in HMS		
E12-11-009	Neutron Form Factor	B+	50		Neutron polarimeter		
E12-11-107	EMC d(e,e' backward p)	B+	40		LAD (Hall B TOF bars)		
			529	0			
Total	529	Days	6.0	Years @	25	Weeks/year	
					Schedule 2 days / PAC day		

Timeline for Hall C Upgrade

- May 2012 Q_{weak} ended and removal (Q_{weak}+SOS) started
- Early 2013 SHMS installation begins

Magnet	Delivery Date
Q1	Feb 2014
Dipole	July 2014
Q2,Q3	Oct, Dec 2014
3° Horizontal Bender	May 2014

- Early 2014 Shower counter and electronics/DAQ
- Late 2014-15 Detector installation
- 2015 SHMS commissioning

Commissioning Experiments in Hall C

Early running plans – Year 1

2015: ~25 PAC days – Commissioning "Experiment"

9 days of E12-06-107 search for color transparency

A(e,e'p) only – "easy" coincidence measurement

E12-10-002 $F_2^{p,d}$ structure functions at large x

Momentum scans help understand acceptance

2 days E12-10-108 EMC Effect

Integrate light nuclei with F_2 run,

Point target helps acceptance studies.

3 days of E12-10-003 d(e,e'p)

If time available

Push to lower cross sections

Early running plan – Years 2

2016:

E12-09-017 P_t dependence of basic SIDIS cross sections

Push particle ID capabilities of SHMS

E12-09-002 Precise $\pi^+\pi^-$ ratios in SIDIS – Charge Symmetry

Detector efficiencies

E12-09-011 L/T separated $p(e,e'K^+)$ factorization test

Easiest L/T separation

2017:

E12-06-121 g_2^n measurements at fixed Q^2

First polarized ^{3}He target experiment in Hall C

A_1^n, $F\pi$, GeN?

Notes

Minutes of weekly Hall C meetings now being posted in Hall C Wiki
https://hallcweb.jlab.org/wiki/index.php/Hall_C_Weekly_Meeting

Hall C Postdoc position posted, accepting applications

Current User Group Board – Eric Christy (9/14), Donal Day (9/13), Kawtar Hafidi (9/15), Mark Jones (9/13), Pete Markowitz (9/14), Gabriel Niculescu (9/15)

Proposed bylaw changes to “SHMS-HMS User’s Group”. Changes name to “Hall C User’s Group”. Vote will be conducted by email.

Slides from this meeting will be posted on agenda web page. Please email slides to saw@jlab.org

JSA Initiative funds available to sponsor informal grad student/postdoc luncheon connected with hall collaboration meetings. Plan to organize such a lunch for Hall C summer meeting.

Hall C Party Friday night, directions available 7PM

Backup slides

Hall C 12 GeV Era Summary

- Hall C will have two well shielded magnetic spectrometers able to exploit full beam energy, measure low cross sections with precision, L/T separations
- Approved program of structure functions, SIDIS, exclusive reactions and nuclear effects (EMC, X>1, Transparency) $\rightarrow$ ~2020
- Additions to base equipment:
  - Neutron and proton polarimeters
  - Backward nucleon detector
- π^0/γ detector a low cost natural addition to base equipment
  - Use “could” start 2019/2020
  - Would help assure healthy physics program to 2030
  - Hall C can support modest development/design/fabrication efforts. Parasite beam testing possible.

Hall C after 12 GeV Upgrade

- Beam Energy: 2 – 11 GeV/c
- Super High Momentum Spectrometer (SHMS)
  - Horizontal Bender, 3 Quads, Dipole
  - P $\rightarrow$ 11 GeV/c
  - dP/P 0.5 – 1.0x10^{-3}
  - Acceptance: 4msr, 30%
  - 5.5° < θ < 40°
  - Good e^-/π^- $e^+/\pi^+/K^+/p$ PID
- High Momentum Spectrometer (HMS)
  - P $\rightarrow$ 7.5 GeV/c
  - dP/P 0.5 - 1.0x10^{-3}
  - Acceptance: 6.5msr, 18%
  - 10.5° < θ < 90°
  - Good e^-/π^- $e^+/\pi^+/K^+/p$ PID
- Minimum opening angle: 17°

- Well shielded detector huts
- 2 beamline polarimeters
- Ideal facility for:
  - Rosenbluth (L/T) separations
  - Exclusive reactions
  - Low cross sections (neutrino level)

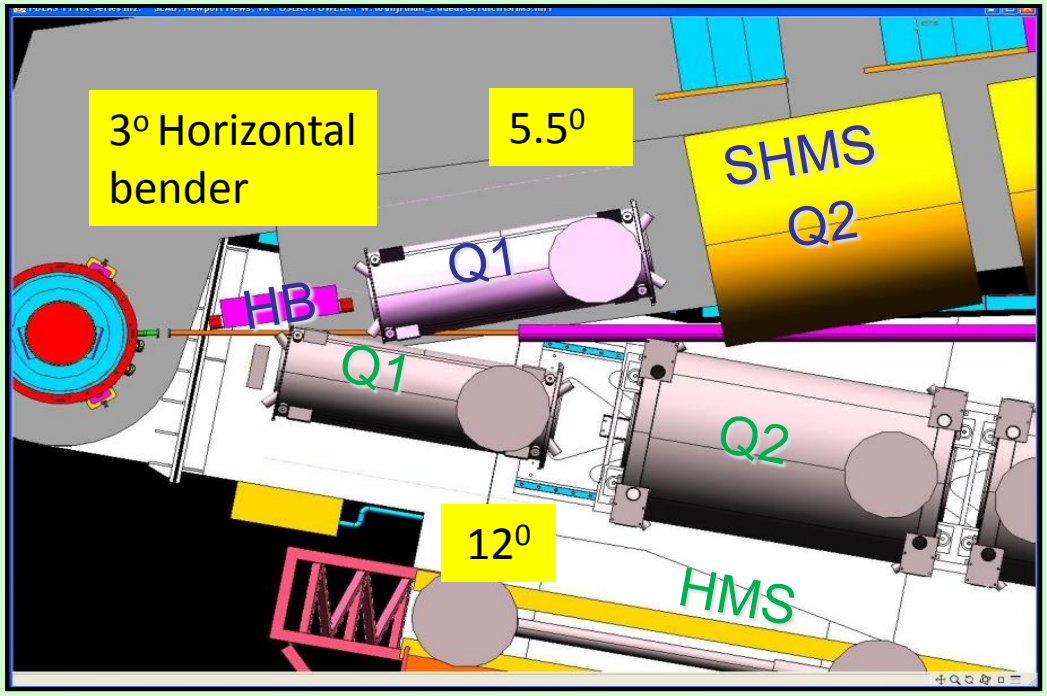

12 GeV Hall C Physics

- Exclusive reactions and form factors
  - Neutron Electric Form Factor
  - d(e,e′p)
  - Pion Form Factor
  - Factorization of exclusive p(e,e′π), p(e,e′K), Kaon FF?
- Semi-Inclusive Deep Inelastic Scattering p,d(e, e′$\pi^{\pm}$)
  - Quark transverse momentum distributions
  - Charge symmetry of parton distributions – $u^p(x) = d^n(x)$?
- Nucleon Structure Functions – Inclusive (e,e′)
  - Unpolarized structure functions, high *x*
  - Neutron spin-structure functions (polarized 3He)
- Nuclear Effects
  - Nuclear transparency, A(e,e′p), A(e,e′π)
  - EMC effect
  - *x*>1(Short Range Correlations, Superfast quarks)
  - ^{4}He(e,e’p)

Approved 12 GeV Hall C proposals 1

Title	Days	Grade
Measurement of the Charged Pion Form Factor to High Q^2 (E12-06-101) *Spokespersons: G.M. Huber (huberg@uregina.ca), D. Gaskell*	52	A
Measurement of the Ratio $R = \sigma_L/\sigma_T$ in Semi-Inclusive DIS (E12-06-104) *Spokespersons: R. Ent, (ent@jlab.org) ,H. Mkrtchyan*	40	A-
Inclusive Scattering from Nuclei at x > 1 in the quasielastic and deeply inelastic regimes. (E12-06-105) *Spokespersons: J. Arrington (johna@anl.gov), D. Day*	32	A-
The Search for Color Transparency at 12 GeV (E12-06-107) *Spokespersons: D. Dutta (ddutta@jlab.org) , R. Ent*	26	B+
Measurement of Neutron Spin Asymmetry A_{1n} in the Valence Quark Region Using an 11 GeV Beam and a Polarized ^{3}He Target in Hall C (E12-06-110) *Spokespersons: J.-P. Chen, X. Zheng (xiaochao@jlab.org), Z. E. Meziani, G. D. Cates*	36	A
Neutron g_2 and d_2 at High Q^2 in Hall C (E12-06-121) *Spokespersons: B. Sawatzky (brads@jlab.org) , W. Korsch , Z.-E. Meziani, T. Averett*	29	A-
Scaling Study of the L-T Separated Pion Electroproduction Cross Section at 11 GeV (E12-07-105) *Spokespersons:. T. Horn (hornt@jlab.org) , G .Huber*	36	A-
Charge Symmetry Violating Quark Distributions via Precise Measurement of pi+/pi- Ratios in Semi inclusive Deep Inelastic Scattering (E12-09-002) *Spokespersons:K. Hafidi (kawtar@anl.gov),D. Gaskell, D. Dutta*	22	A-

Approved 12 GeV Hall C proposals 2

Title	Days	Grade
Studies of the L-T separated kaon electroproduction cross sections from 5-11 GeV (E12-09-011) *Spokespersons:T. Horn (hornt@jlab.org) , G .Huber, P. Markowitz*	40	B+
Transverse Momentum Dependence of Semi-Inclusive Pion Production (E12-09-017) *Spokespersons:R. Ent (ent@jlab.org), H. Mkrtchyan,P. Bosted*	32	A-
Precision measurements of the F_2 structure function at large x in the resonance region and beyond (E12-10-002) *Spokespersons:S.P. Malace (simona@jlab.org) , I.M. Niculescu, C. Keppel*	13	B+
Deuteron Electro-Disintegration at Very High Missing Momenta (E12-10-003) *Spokespersons: W. Boeglin (boeglin@fiu.edu), M. Jones*	21	B^+
Detailed studies of the nuclear dependence of F_2 in light nuclei (E12-10-008) *Spokespersons: A. Daniel, J. Arrington, D. Gaskell (gaskelld@jlab.org)*	23	A-
Proton Recoil Polarization in the $^4He(e,e'p)^3H$, $^2H(e,e'p)n$, and $^1H(e,e'p)$ Reactions (E)12-11-102) *Spokespersons: E. Brash , R. Ransome, G. M. Huber, S. Strauch (strauch@jlab.org)*	37	B+
In Medium Nucleon Structure Functions, SRC, and the EMC effect (PR-12-11-107) *Spokespersons:O. Hen, L.B. Weinstein (weinstei@jlab.org), S. Gilad*	40	B+
The Neutron Electric Form Factor at Q^2 up to 7 $(GeV/c)^2$ from the Reaction $^2H(e, e n)^1H$ via Recoil Polarimetry (E12-11-009) *Spokespersons:B. D. Anderson J. Arrington (johna@anl.gov) ,S. Kowalski, R. Madey, B. Plaster, A.Yu. Semenov*	50	B+