GlueX Computing
GlueX Collaboration Meeting – JLab

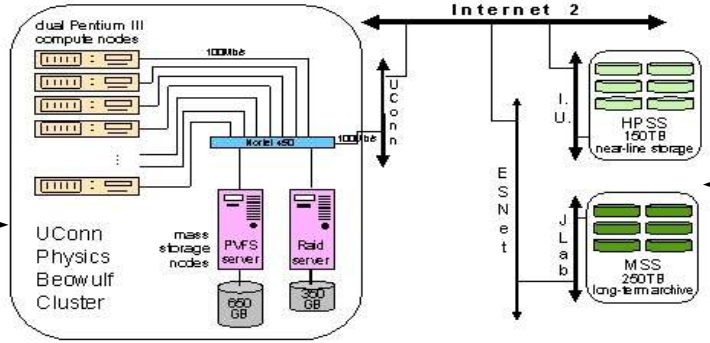

Edward Brash – University of Regina

December 11th-13th, 2003

VRVS Videoconferences

- www.vrvs.org -> web-based videoconferencing site – currently free

- audio/video/chat services, along with desktop sharing using VNC

- WXP and Linux compatibility -> might even work with a Mac !!

- series of videoconferences since the Glasgow meeting. We are getting fairly proficient at setting up and getting going quickly now.

- A large fraction of the work that has been done since the Glasgow has been motivated and directed via these meetings -> very useful motivator

- Polycom systems at FSU and Uconn – totally hands free -> plans to set another system up at Regina soon.

GlueX Computing Pre-History

The Uconn Workfest
Goals for the Computing Environment

1. The experiment must be easy to conduct.
2. Everyone can participate in solving experimental problems – no matter where they are located.
3. Offline analysis can more than keep up with the online acquisition.
4. Simulations can more than keep up with the online acquisition.
5. Production of tracks/clusters from raw data and simulations can be planned, conducted, monitored, validated and used by a group.
6. Production of tracks/clusters from raw data and simulations can be conducted automatically with group monitoring.
7. Subsequent analysis can be done automatically if individuals so choose.

Hall D Data Model

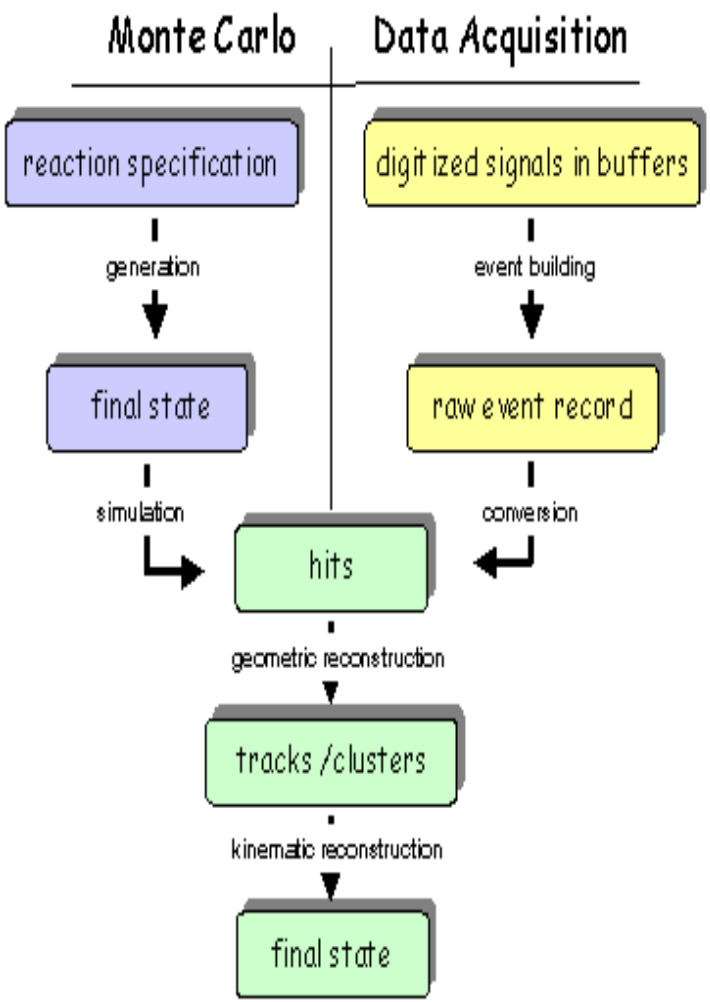

- The boxes represent well-defined stages in the analysis path where the data can be “viewed”.

- The lines represent specific computing tasks.

- At the time of the workfest, it was agreed upon by those present that it should be possible to easily create and XML description of the viewable data at all points in the analysis path.

- Note that in this schematic, there is a single geometric and kinematic reconstruction package.

Hall D Data Model

- Each data file or i/o port of a program is associated with an XML schema that defines the data structure that the program expects or produces. Any XML document that is valid according to the schema should be accepted by the program.

- The main purpose of the HDDM is to simpify the programmer's task by providing automatic ways to generating schemas, and to standardize the input and output of XML data.

- Programmers are NOT obligated to use the HDDM tools to work in the GlueX software framework. They can provide their own schemas for each file or i/o port used by the program, which must necessarily accept any XML that respects said schema.

- New Tools:

hddm-schema	->	extracts the XML metadata from a hddm file file header, and generates a schema
schema-hddm	->	reads a schema, and checks it for compliance with the hddm specification

http://zeus.phys.uconn.edu/halld/datamodel/doc/

Hall D Detector Specification

- XML-based geometry specification for the Hall D detector and beam line.

- In the near term, the need is to have a single reference for geometrical parameters used in Monte Carlo simulations. In the long term, most elements in the analysis path will have need for geometry information.

- The idea to use XML for the geometry specification was inspired by ATLAS. Also, ROOT is planning to develop XML geometry parsing tools in the near future (Presented at CHEP 2003)

- Immediate Problems to Solve:

1. How does one conveniently visualize the geometry?
2. How does one test new geometries?

Hdds-root

- ROOT provides a suite of tools for geometry visualization. There is a lot of development currently going on in this area – driven by ATLAS and other projects.

- ROOT includes with the normal distribution a utility, g2root, which translates a geant3 geometry description into a macro which recreates this geometry within ROOT.

- hdds-root generates this ROOT macro directly from the XML geometry description.

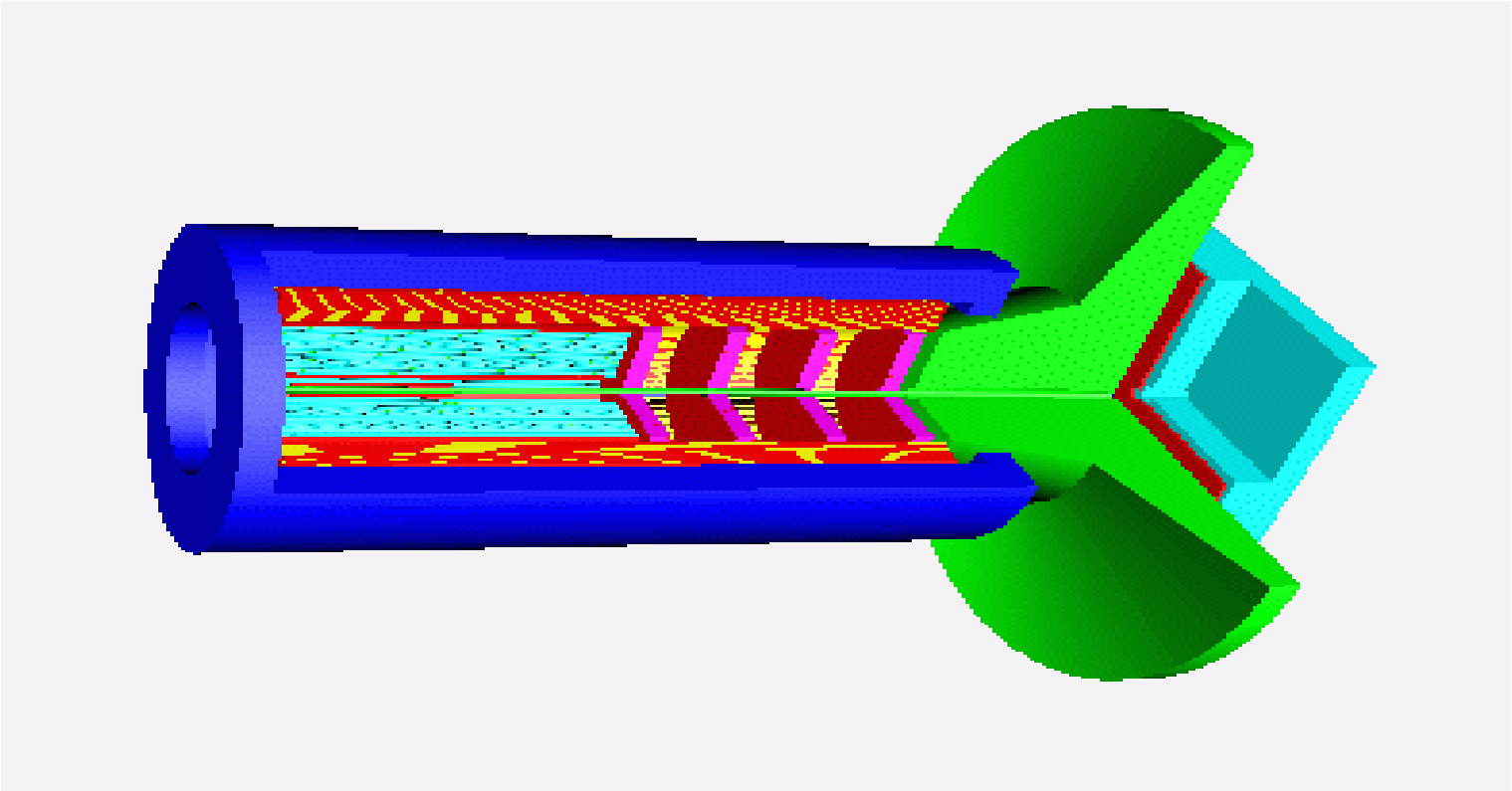

Future Developments

- The ROOT geometry browser is currently somewhat rudimentary. We plan to develop a new browser that has both more functionality, and as well is more tailored to our specific needs in GlueX.

  At the same time, we will closely monitor the ROOT XML development effort.

- Development of “hits” viewing within ROOT -

  HDGeant hddm output -> XML output -> ROOT visualization of hits

- Development of a geometrical reconstruction package – ROOT-based?

OpenShop cluster service: present architecture (2002)

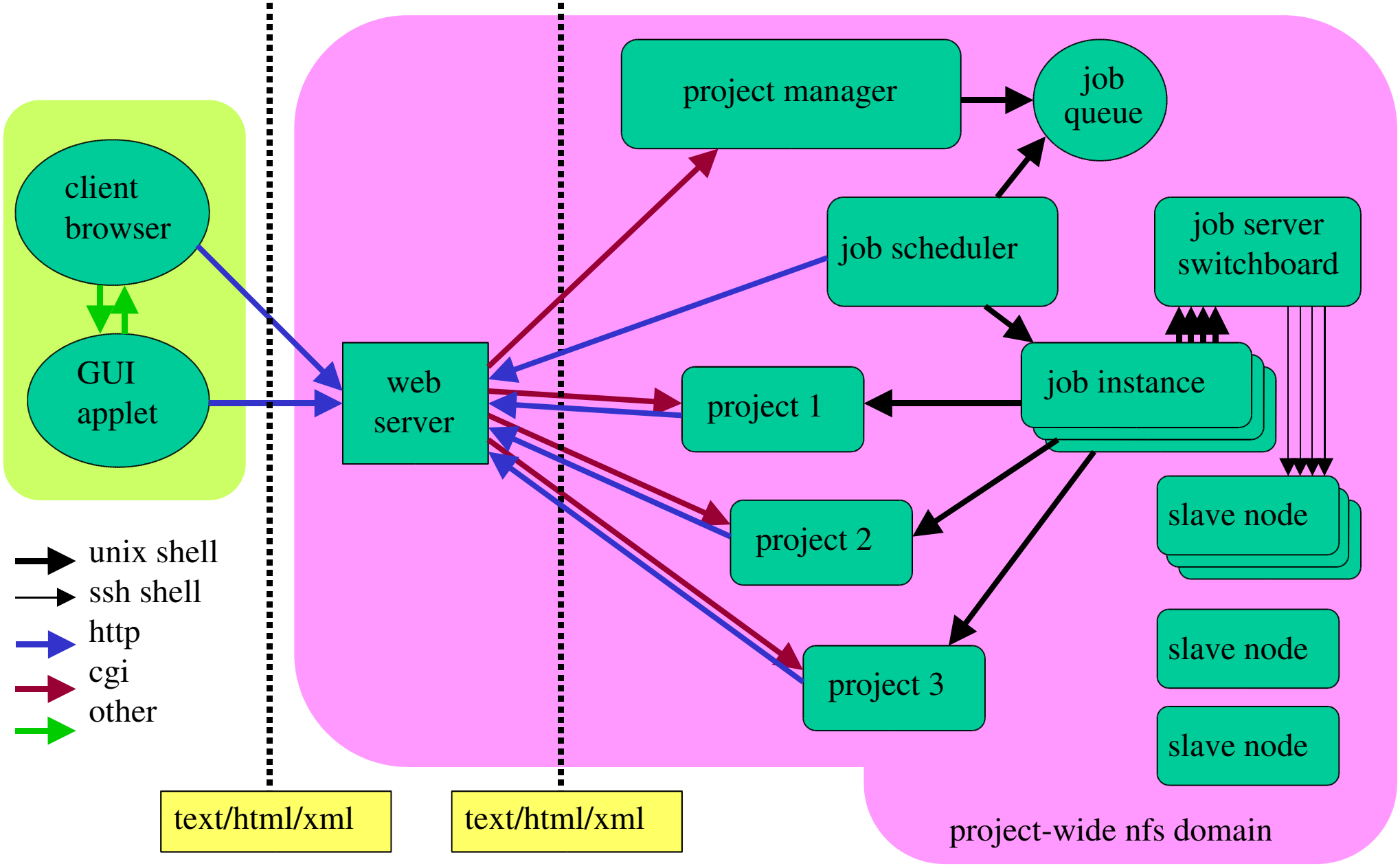

OpenShop cluster service: architechture rev. 1 (2003)

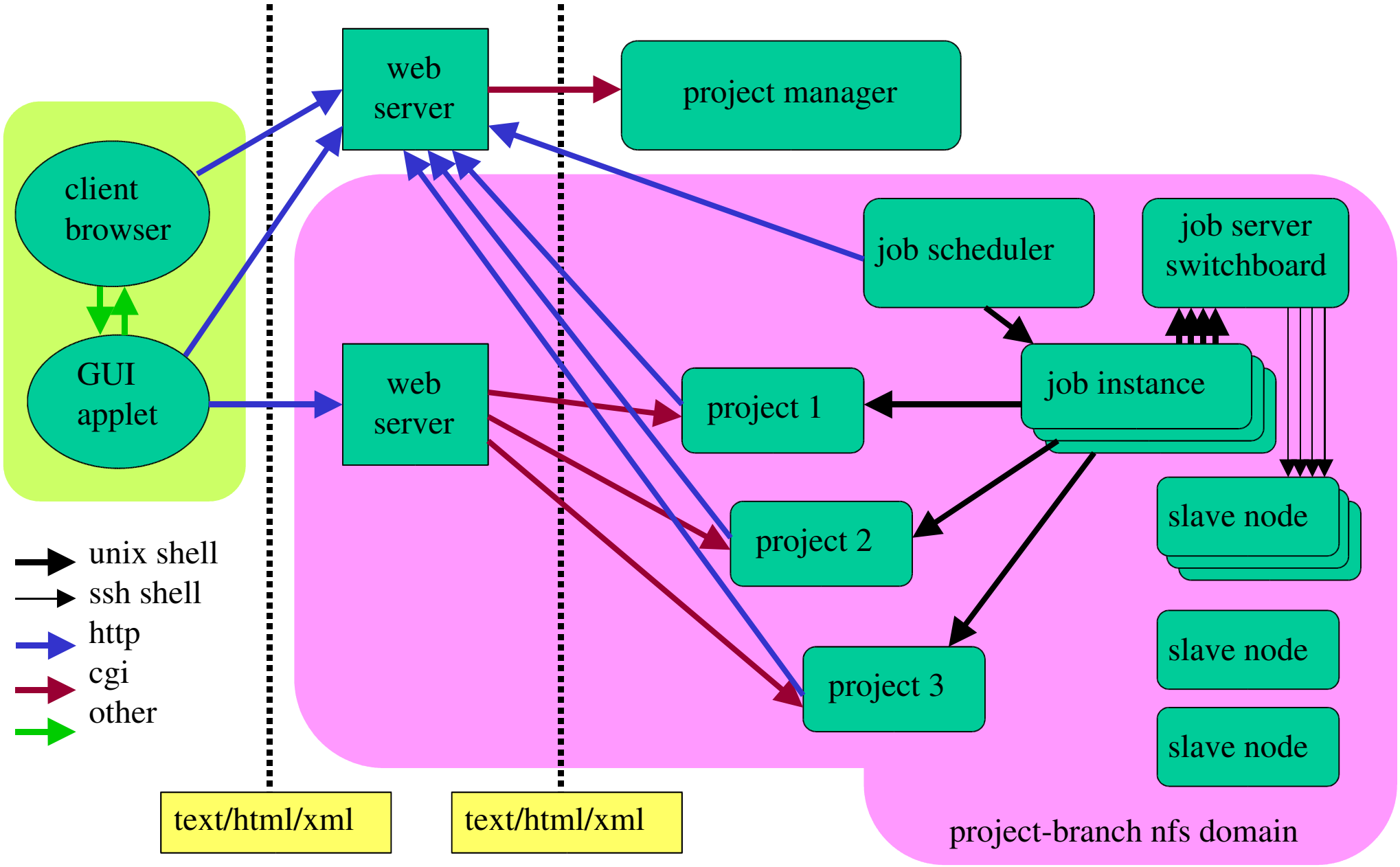

OpenShop cluster service: architechture rev. 2 (2004)

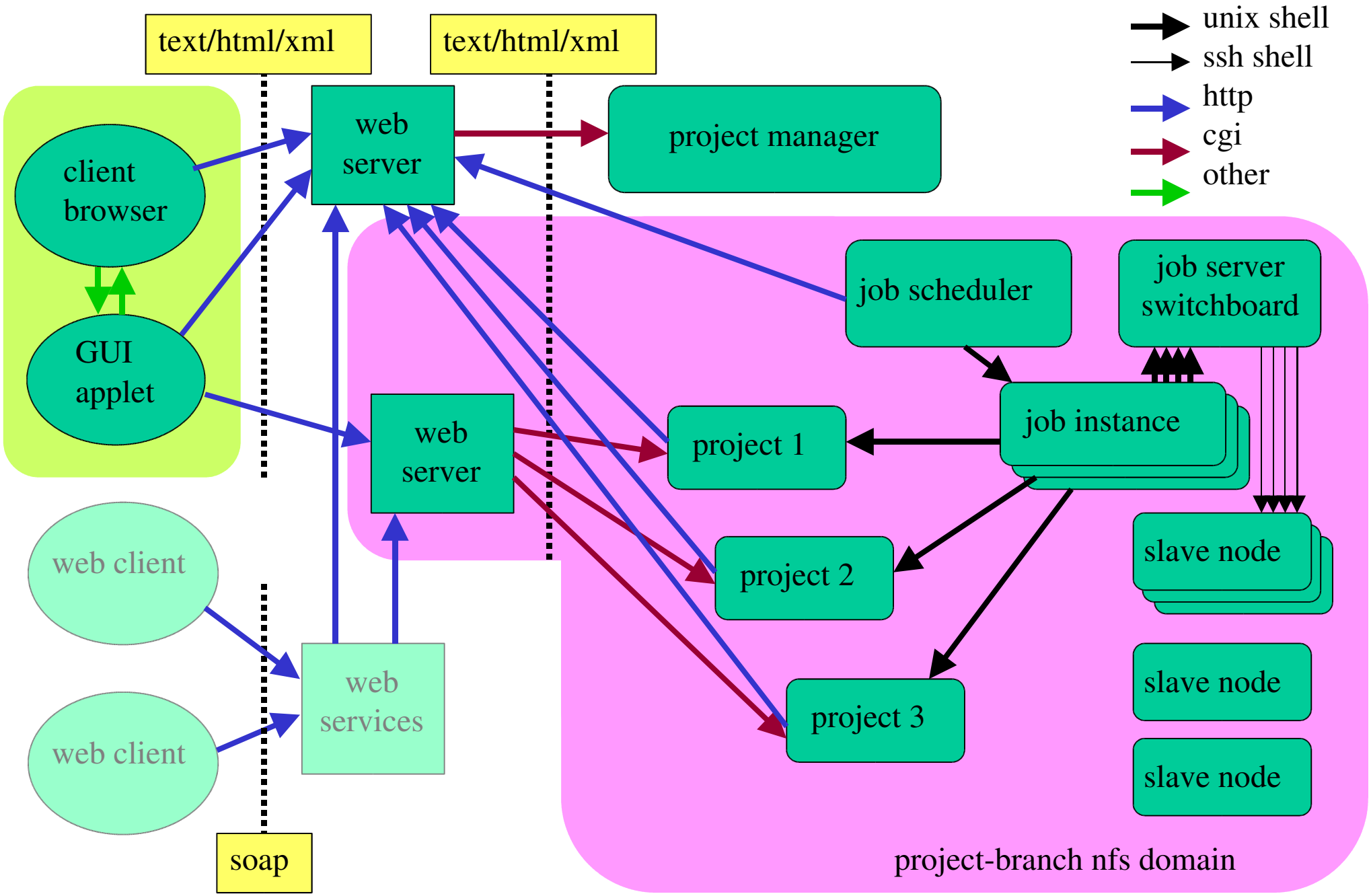

A FileSharing Service with GT3

- Version 3 of the Globus Toolkit includes a great many new developments:

  -> simple installation – much more “ready for prime time”

  -> easy to add new web services

  -> core release (at least) is entirely java-based – multiple architecture support

- FileSharing Service

  -> can be a very useful concept within the context of coordinating simulation efforts from multiple clusters and/or sites.