ILC Polarized e-Source

M. Poelker, P. Adderley, J. Clark, J. Grames, J. Hansknecht,
M. Stutzman, R. Suleiman, K. Surles-Law

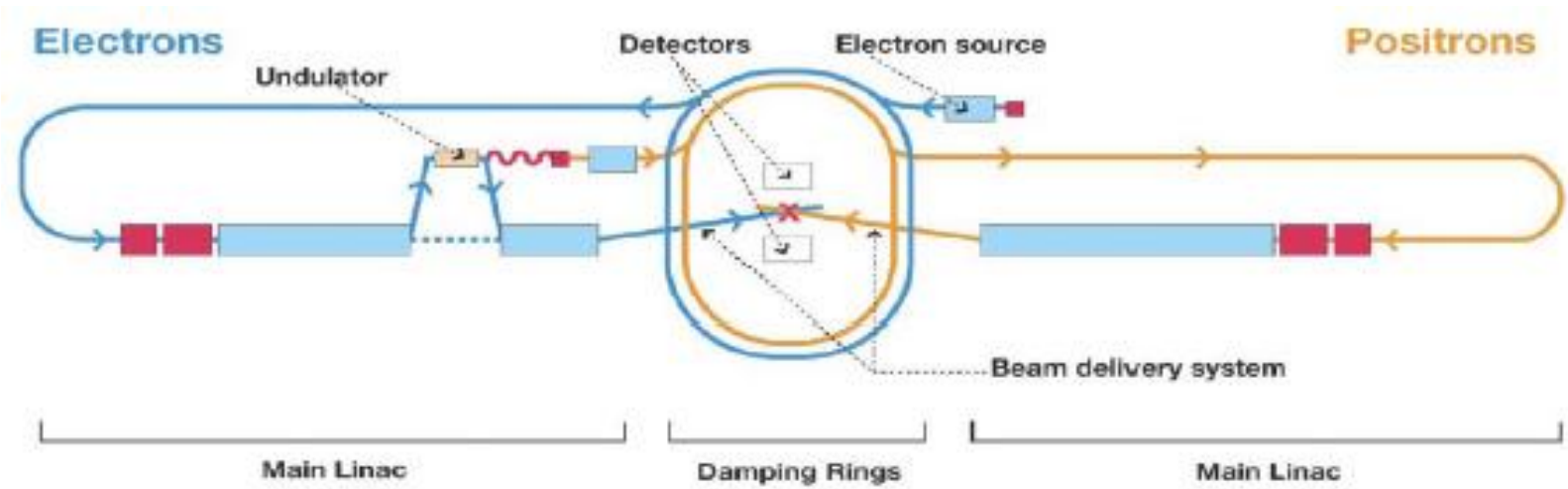

- Jefferson Lab building the gun….
- SLAC building the drive laser….

Jefferson Lab

ILC e- Beam Time Structure….

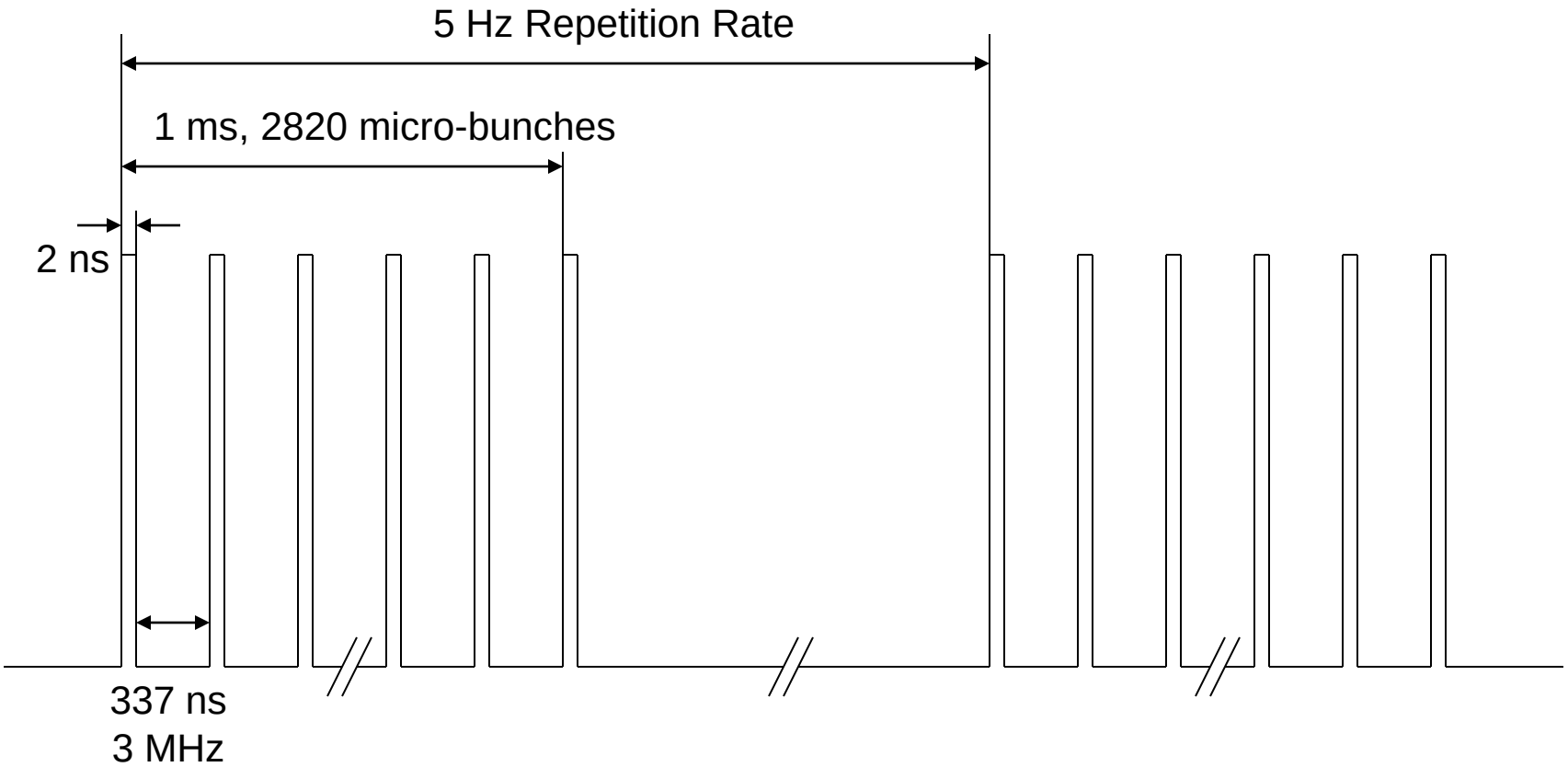

….challenging from a gun/photoinjector perspective

ILC e-Beam Source Parameters

Parameter	Symbol	Value
Number Electrons per microbunch	N_e	3×10^{10}
Number of microbunches	n_b	3000
Width of microbunch	t_b	~ 1 ns
Time between microbunches	Δt_b	337 ns
Microbunch rep rate	f_b	3 MHz
Width of macropulse	T_B	1 ms
Macropulse repetition rate	F_B	5 Hz
Charge per micropulse	C_b	4.8 nC
Charge per macropulse	C_B	14420 nC
Average current from gun (C_B x F_B)	I_{ave}	72 uA
Average current macropulse (C_B / T_B)	I_B	14.4 mA
Duty Factor within macropulse (1ns/337ns)	DF	3×10^{-3}
Peak current of micropulse (I_B / DF)	I_{peak}	4.8 A

laser

gun

vacuum

photo cathode

LL Gun#1 at CEBAF, Installed Summer 2007

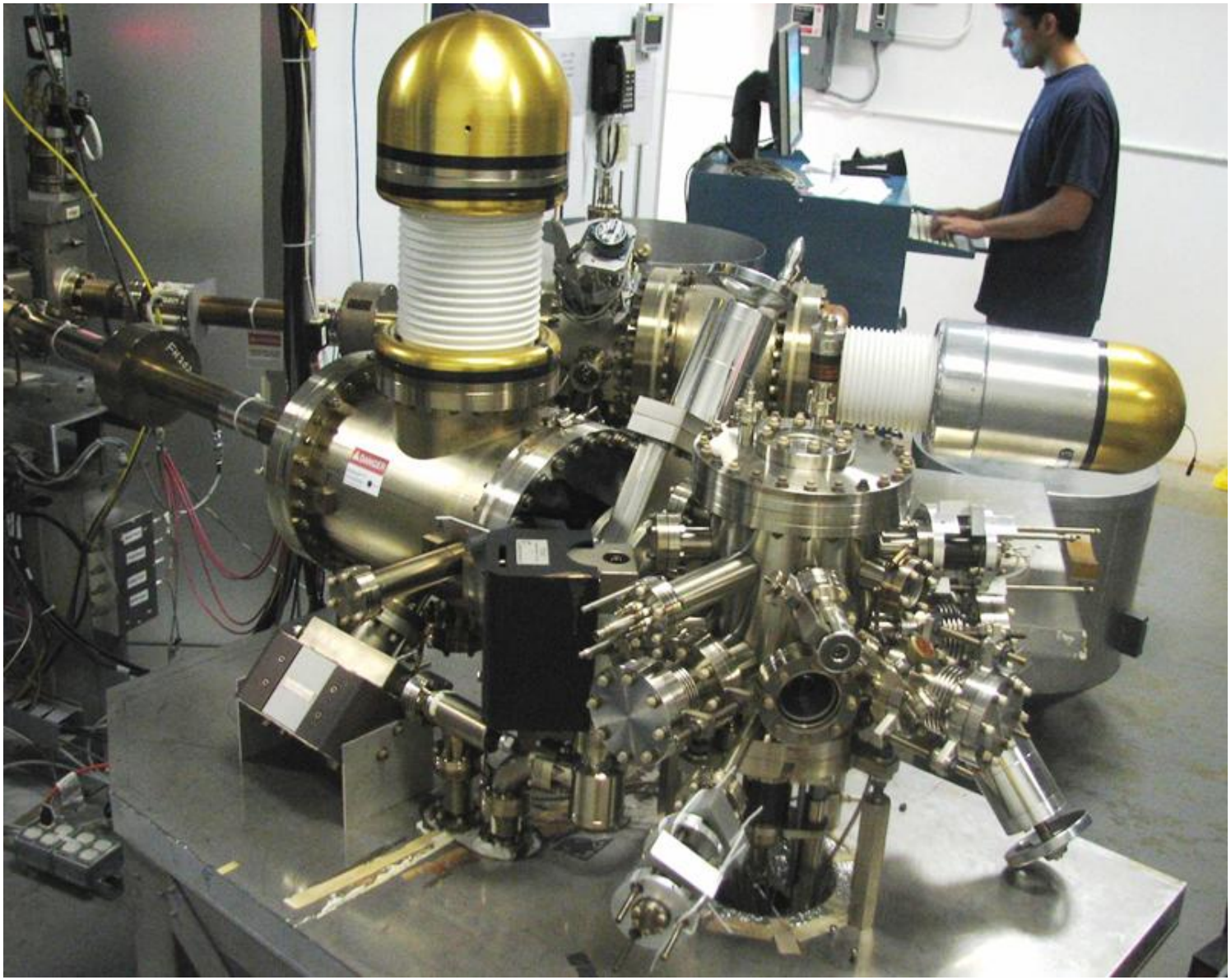

“Inverted” Gun

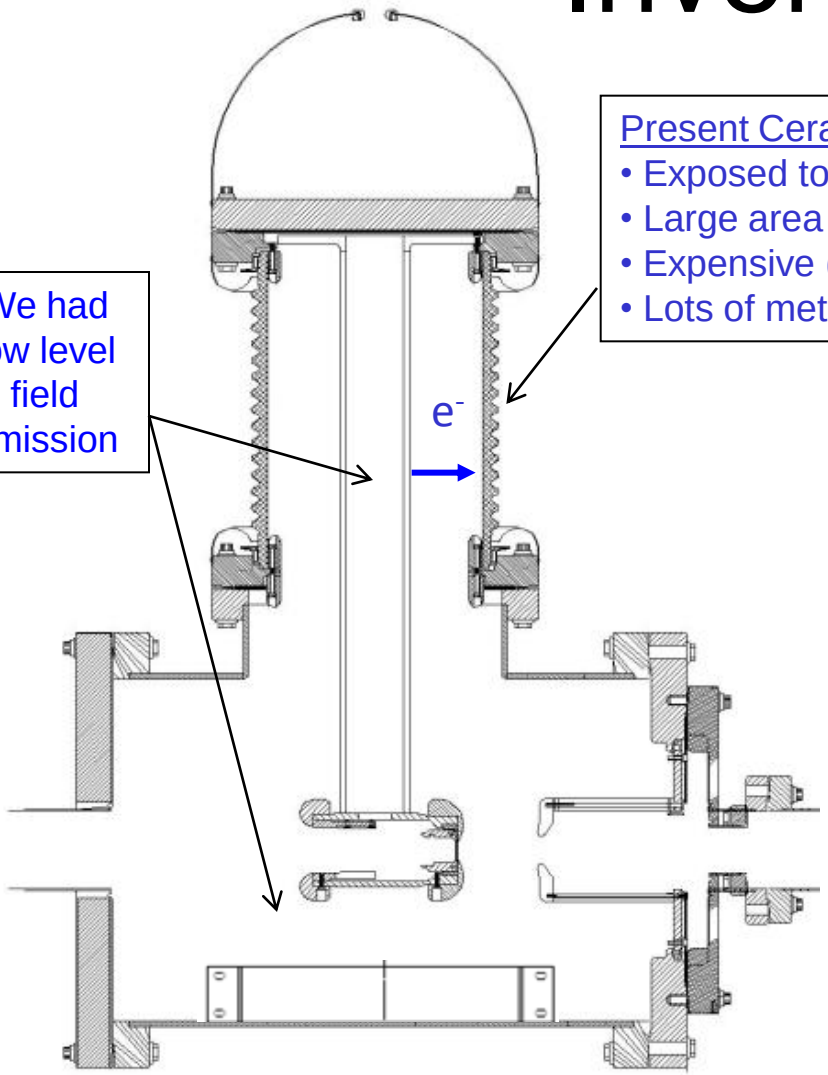

We had low level field emission

Present Ceramic
- Exposed to field emission
- Large area
- Expensive (~$50k)
- Lots of metal at HV

Medical x-ray technology

New Ceramic
- Compact
- ~$5k
- Less metal at HV
- No SF6 of N2

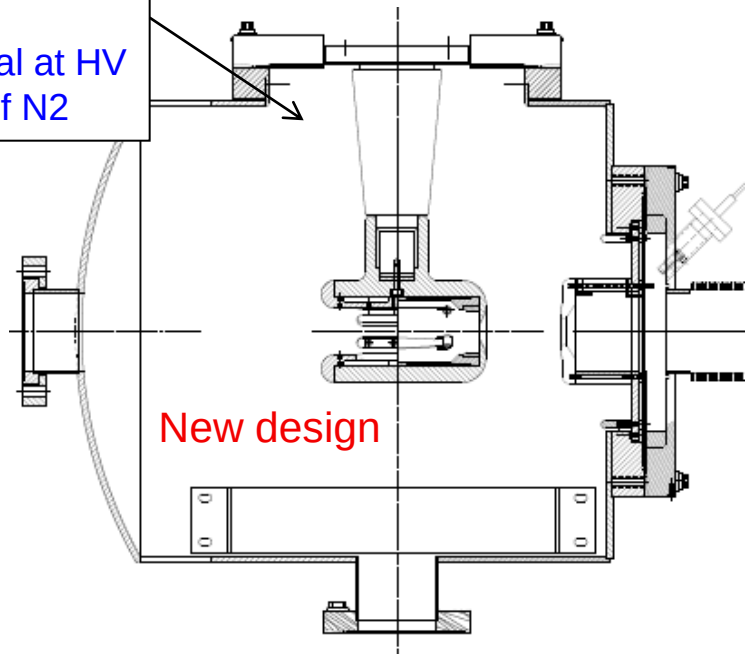

Move away from “conventional” insulator used on most GaAs photoguns today – expensive, months to build, prone to damage from field emission.
High gradient locations not related to beam optics, lots of metal to polish

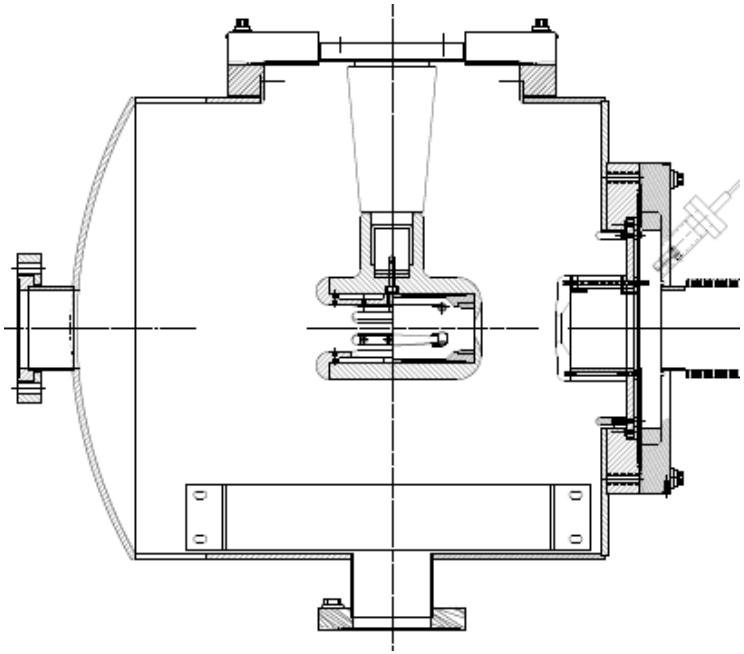

DuPont
Tyvek
DuPont
Tyvek

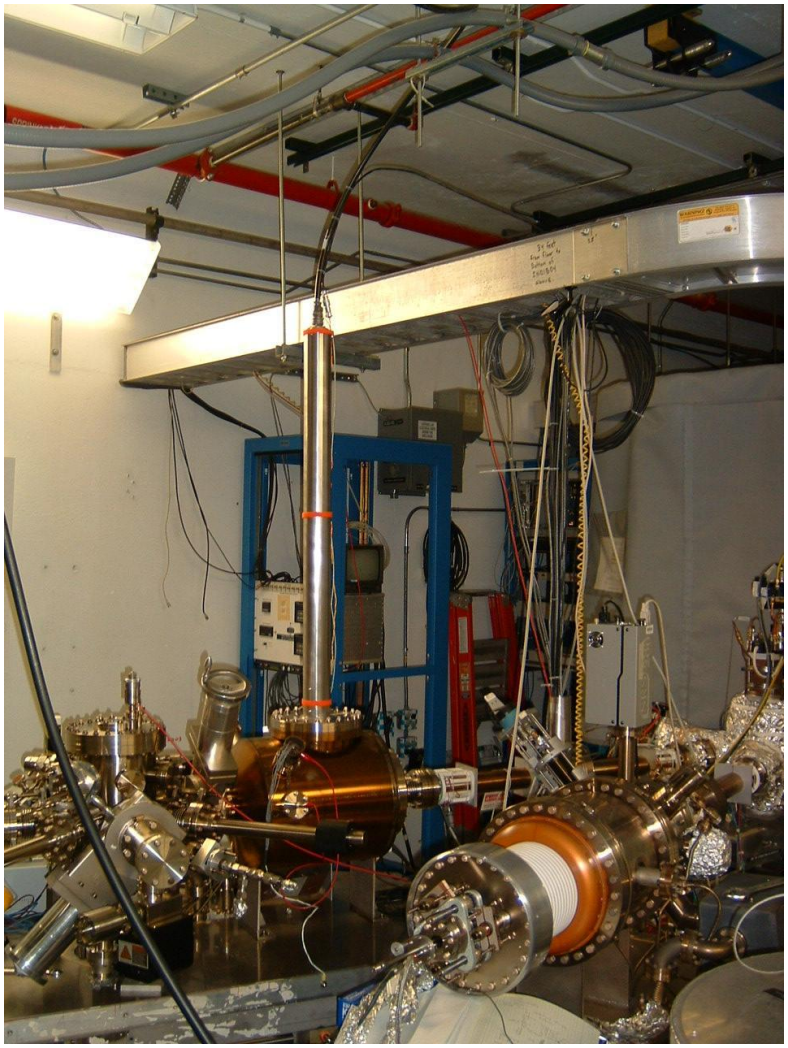

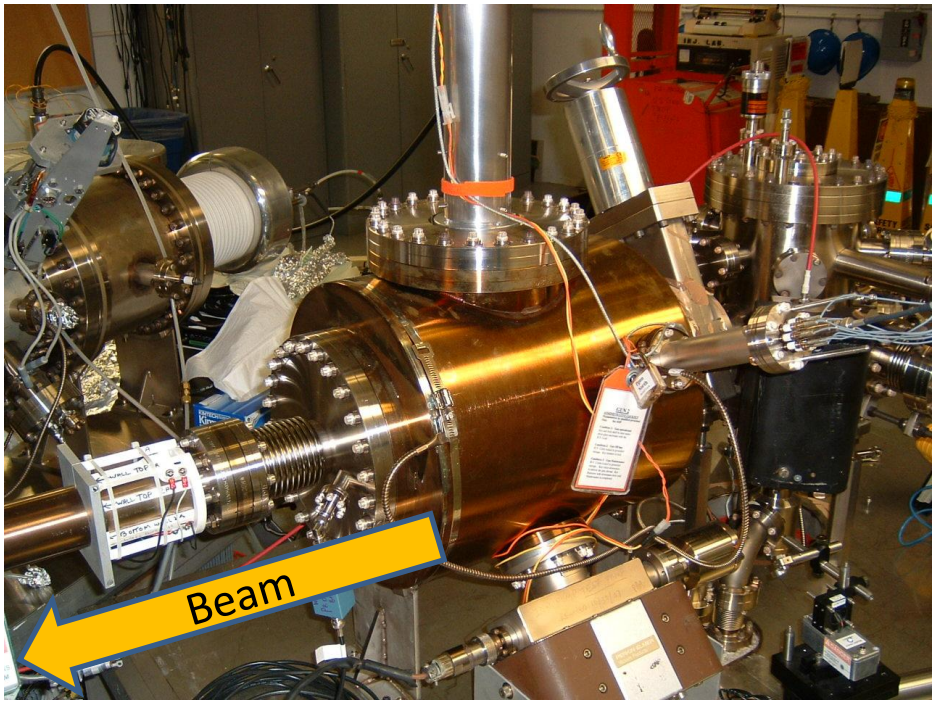

- Inverted Gun installed at CEBAF, operational since July 23, 2009
- Extractor gauge $2x10^{-12}$ Torr (raw value)
- Happy at 100kV, conditioned to 110kV, briefly went to 125kV
- Opportunity at CEBAF for operation > 100kV
- Lifetime ~ 70C at 150uA ave. current
- 2nd InvGun at Test Cave conditioned to 200kV, with large grain Nb electrode. Gun characterization at 100kV underway….

Increase Gun Voltage: Why?

- Reduce space-charge-induced emittance growth, maintain smaller transverse beam profile and short bunchlength
- Address current density limitation due to Child's Law (now I claim not much an issue for ILC, not an issue for CLIC)
- (Maybe?) Reduce problems associated with surface charge limit (i.e., QE reduction at high laser power)
- (Maybe?) Prolong Operating Lifetime

Benchmarking PARMELA Simulation Results Against Beam-Based Measurements at CEBAF/Jefferson Lab – work of Ashwini Jayaprakash, JLab

Measurements at CEBAF/JLab

PARMELA Simulation Results

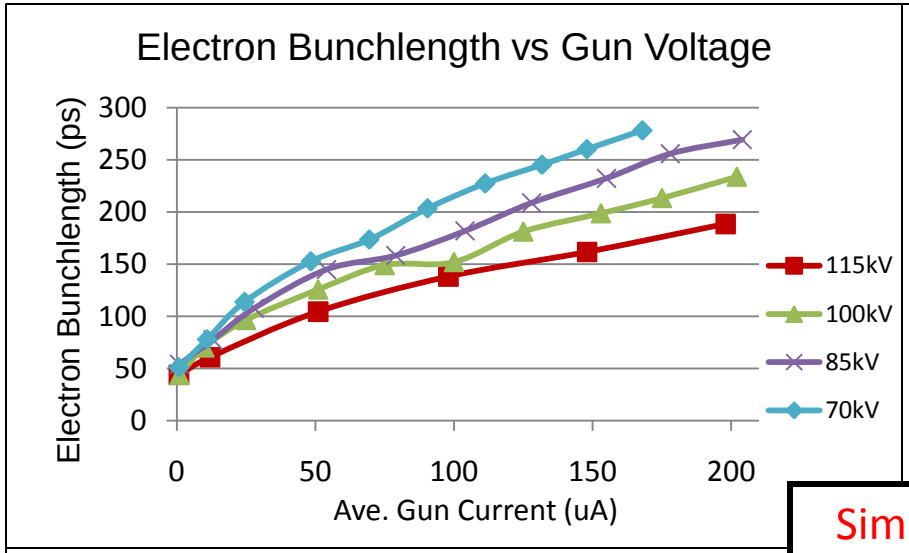

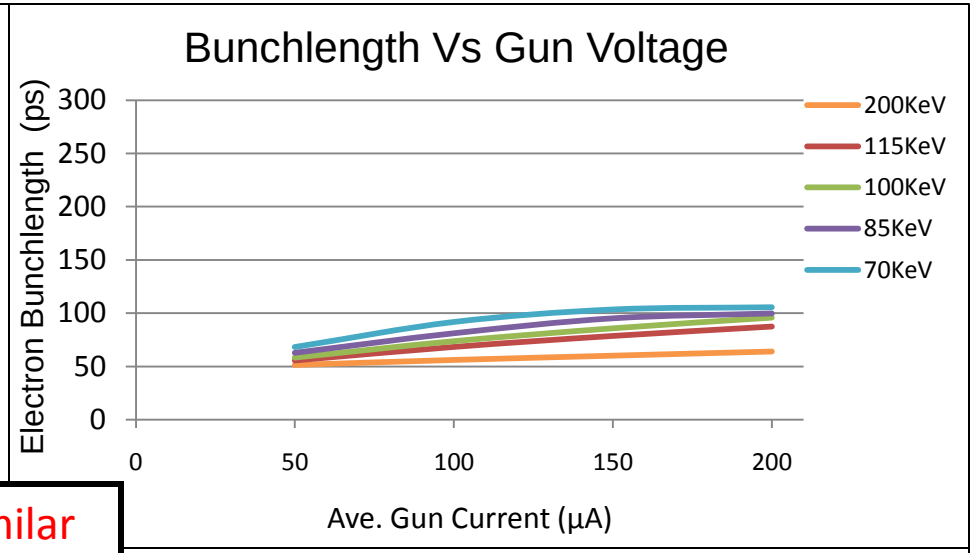

Similar Trends

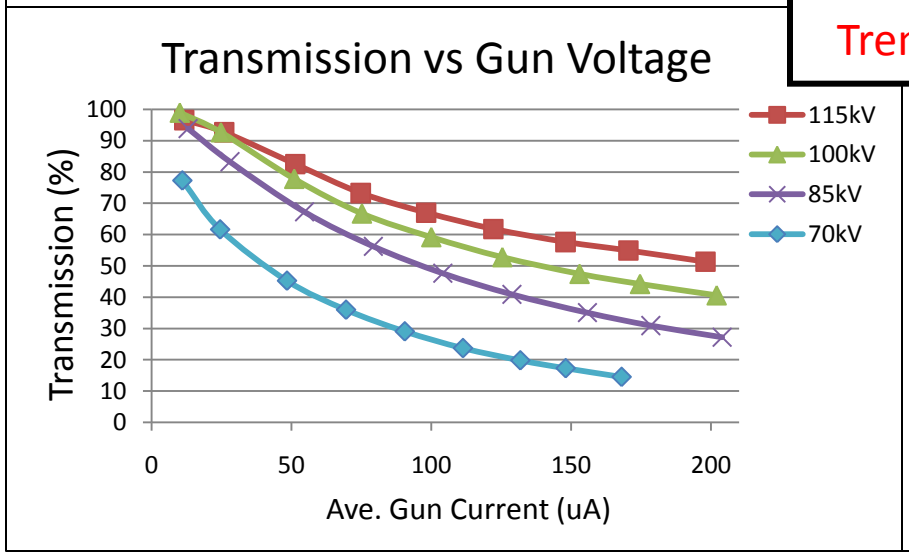

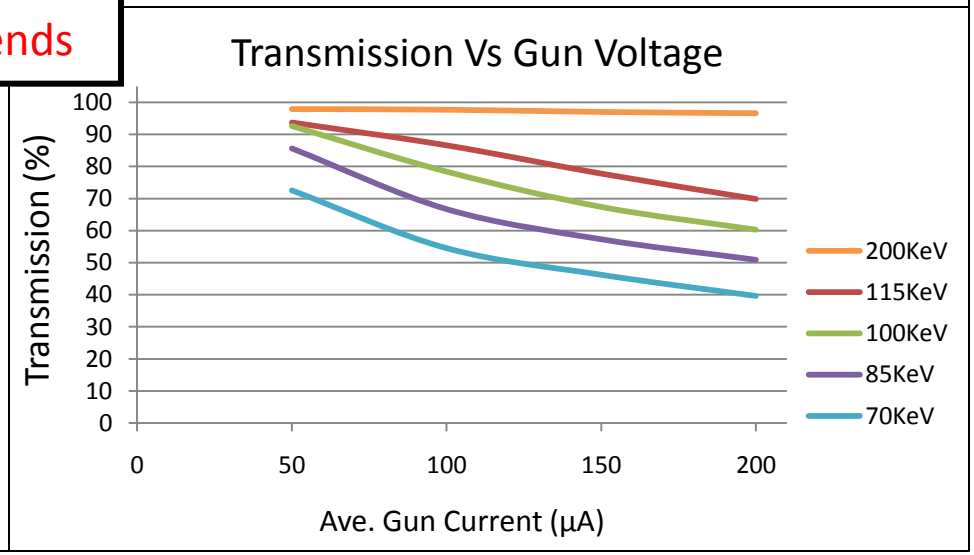

Message: Beam quality, including transmission, improves at higher gun voltage

Increase Gun Voltage Summary

- Reduce space-charge-induced emittance growth, maintain small transverse beam profile and short bunchlength
  - Make a "stiff" beam right from the gun. This helps us build a rugged and reliable photoinjector, and less complicated.
- ILC Baseline design calls for 140kV gun (beta = 0.62)
  - JLab goal 200kV (beta = 0.69)
- Identify what it takes to achieve 350kV bias voltage or higher (beta = 0.8+)

Biggest obstacle: Field emission, HV breakdown…

which lead to Photocathode Death

Historically, Labs have had difficulty operating DC high voltage guns above ~ 100kV and with field gradient > 5MV/m

Field Emission – Most Important Issue

Stainless Steel and Diamond-Paste Polishing
Good to ~ 5MV/m and 100kV.

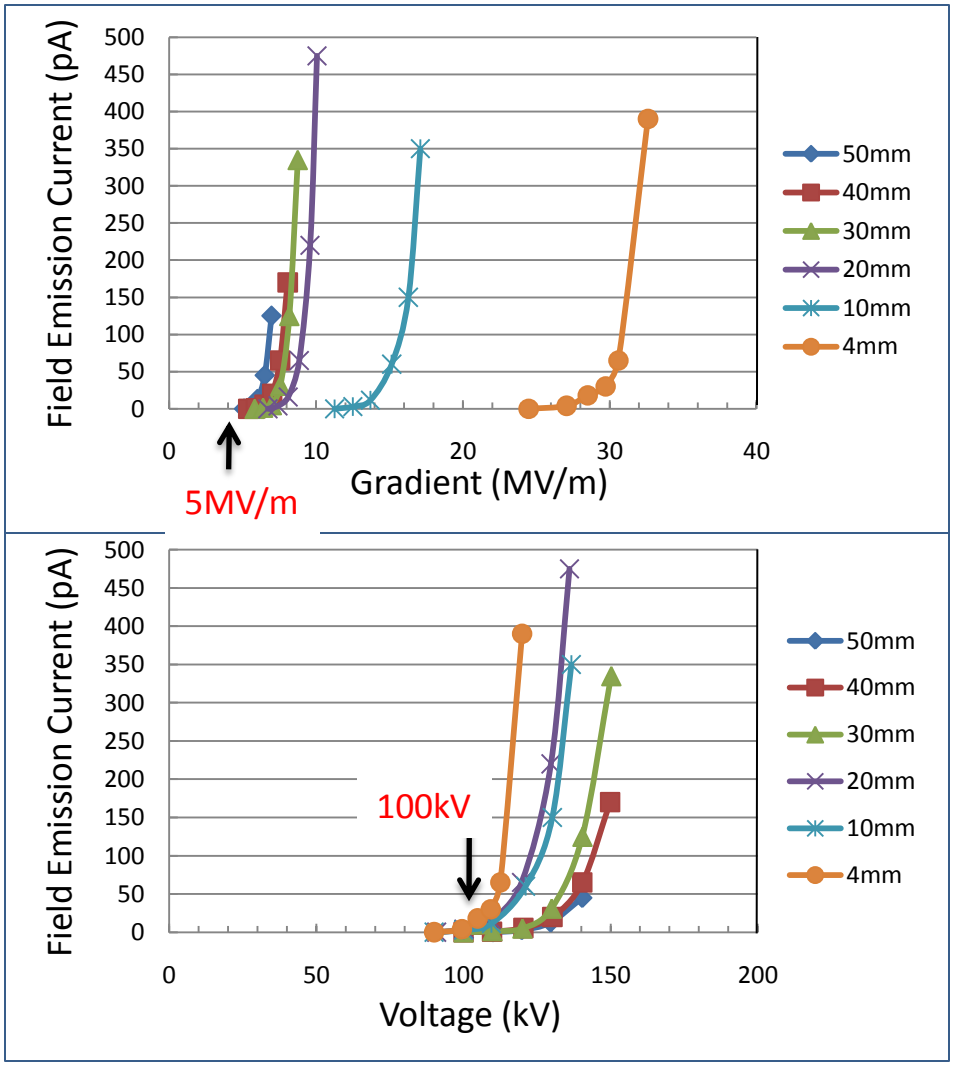

- Flat electrodes and small gaps not very useful
- Want to keep gun dimensions about the same – suggests our 200kV gun needs “quiet” electrodes to 10MV/m

Work of Ken Surles-Law, Jefferson Lab

Electropolished Stainless Steel

- Results similar to diamond-paste polishing: limiting gradient 5MV/m
- Considerable time saving
- Perhaps better results if we start with smoother surface

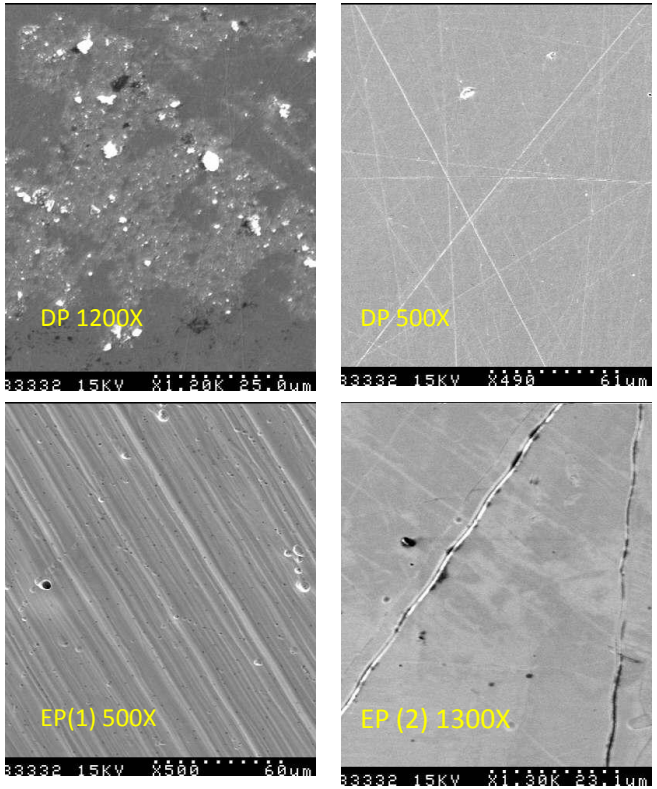

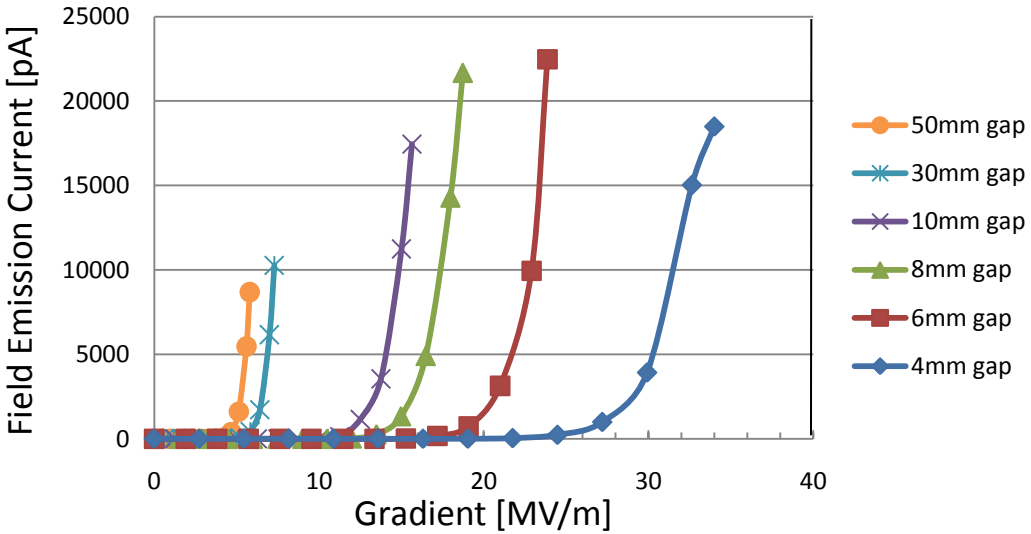

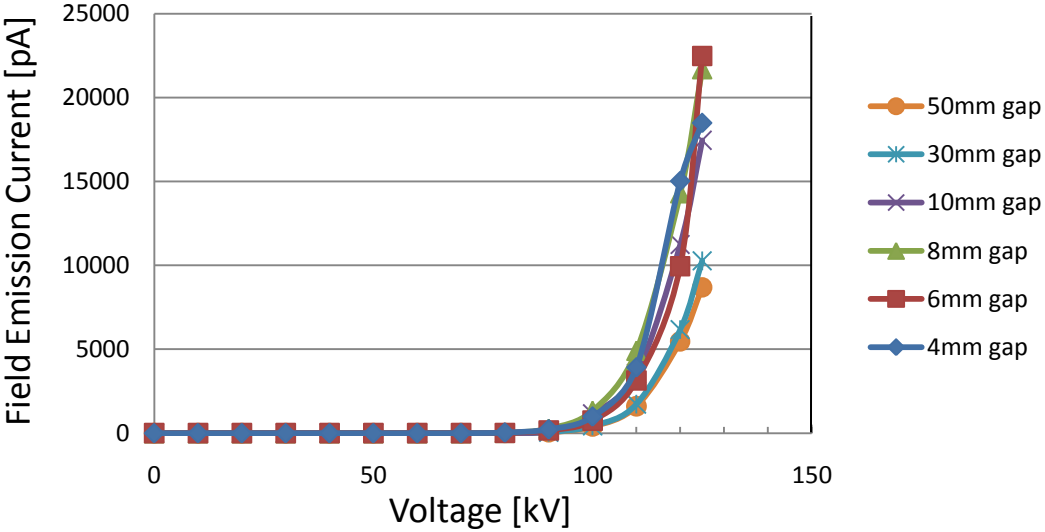

Work of Ken Surles-Law, Jefferson Lab

Single Crystal Niobium:

- Capable of operation at higher voltage and gradient
- Buffer chemical polish (BCP) much easier than diamond-paste-polish

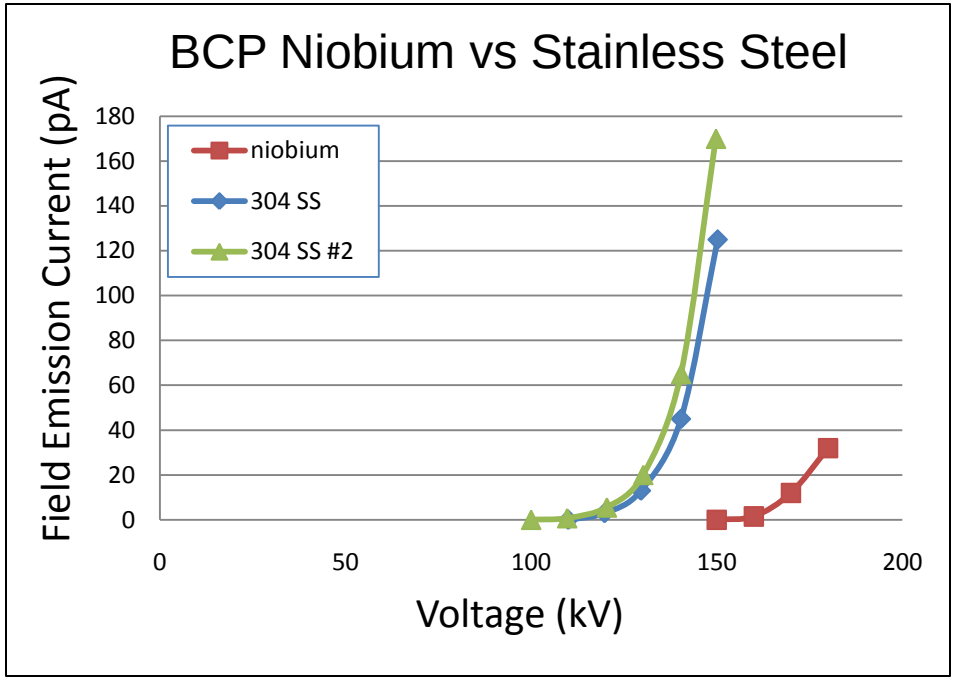

Conventional geometry: cathode electrode mounted on metal support structure

Replace conventional ceramic insulator with "Inverted" insulator: no SF6 and no HV breakdown outside chamber

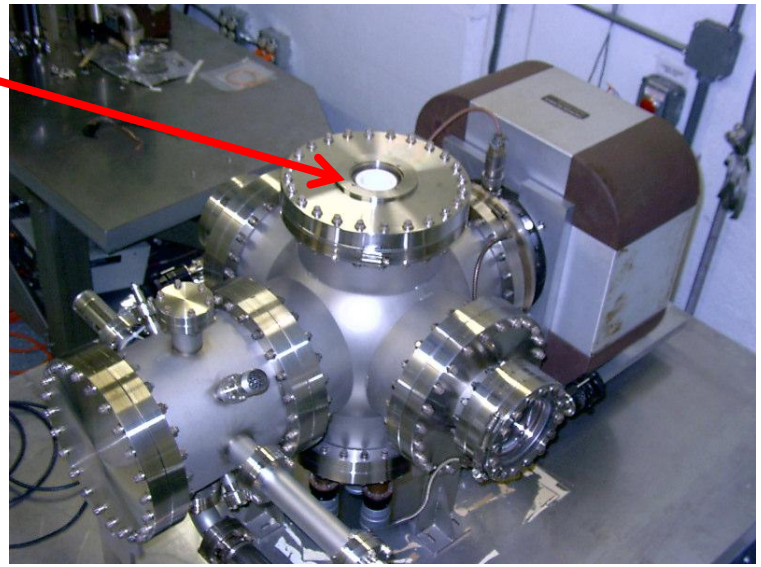

Work of Ken Surles-Law, Jefferson Lab

Single Crystal Niobium:

- Capable of operation at higher voltage and gradient
- Buffer chemical polish (BCP) much easier than diamond-paste-polish

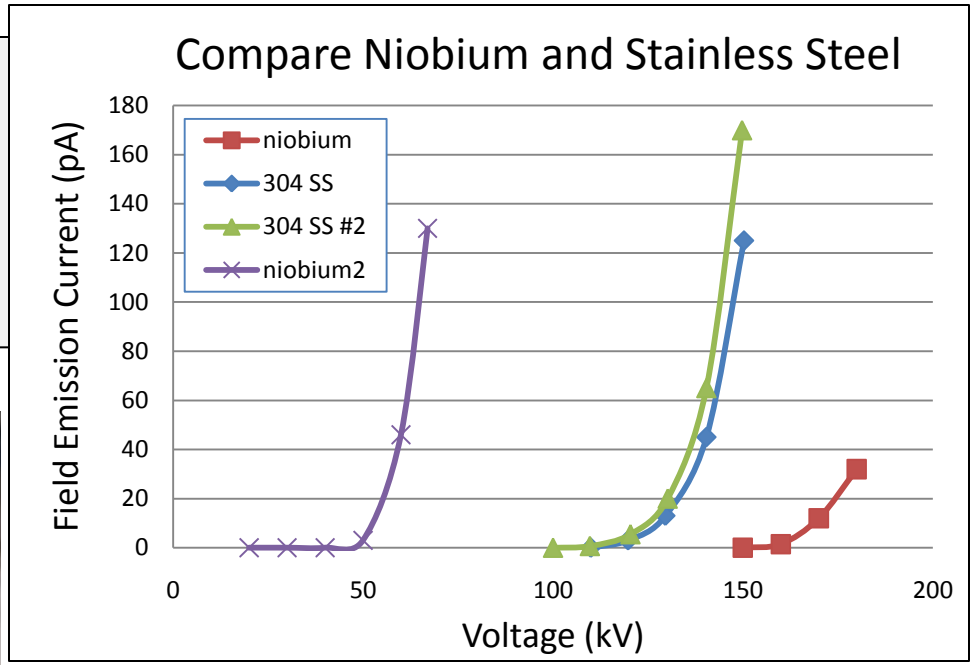

Conventional geometry: cathode electrode mounted on metal support structure

Replace conventional ceramic insulator with "Inverted" insulator: no SF6 and no HV breakdown outside chamber

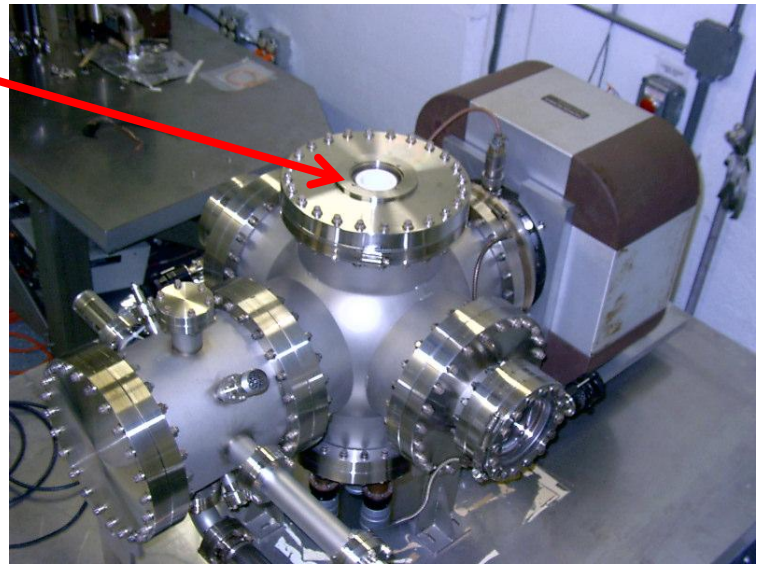

Work of Ken Surles-Law, Jefferson Lab

Krypton Processing to Eliminate FE

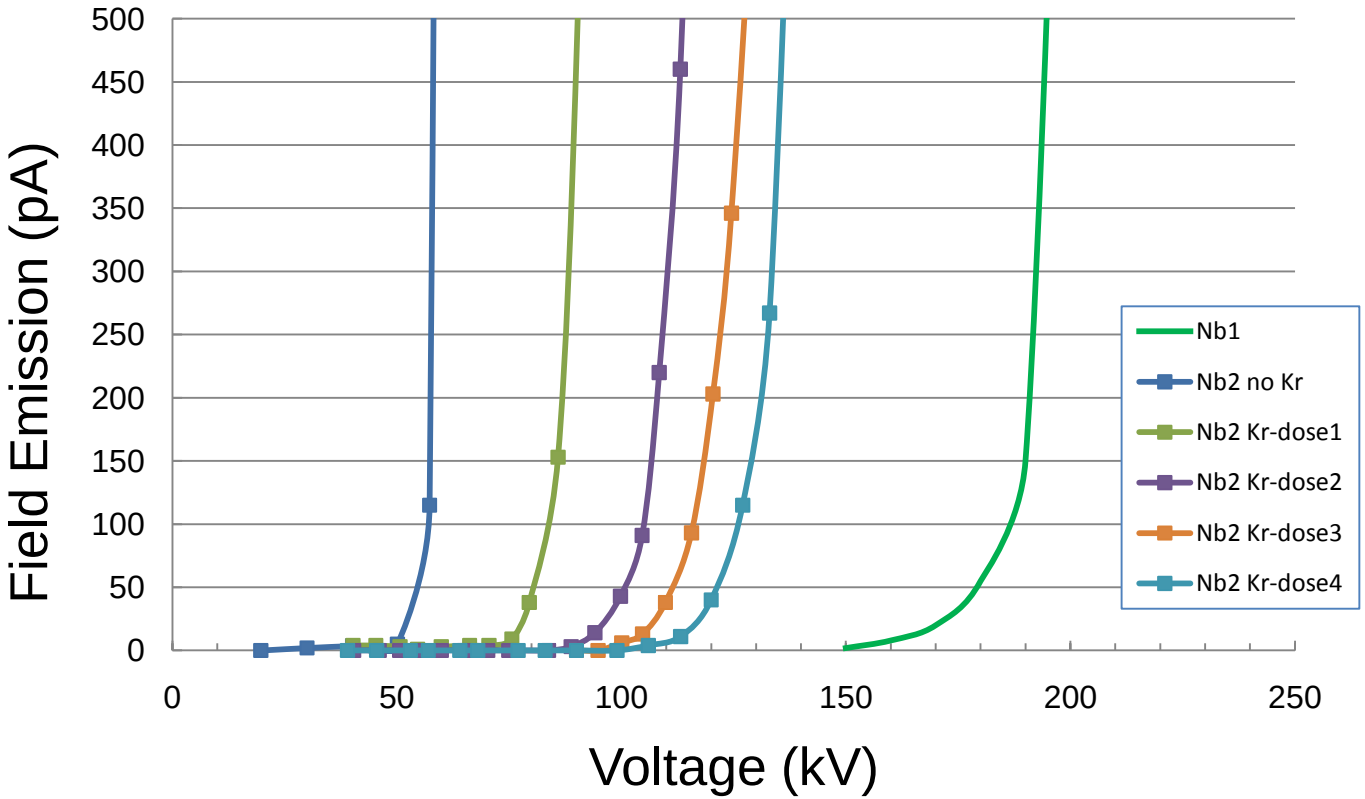

InvGun2 at 200kV Bias

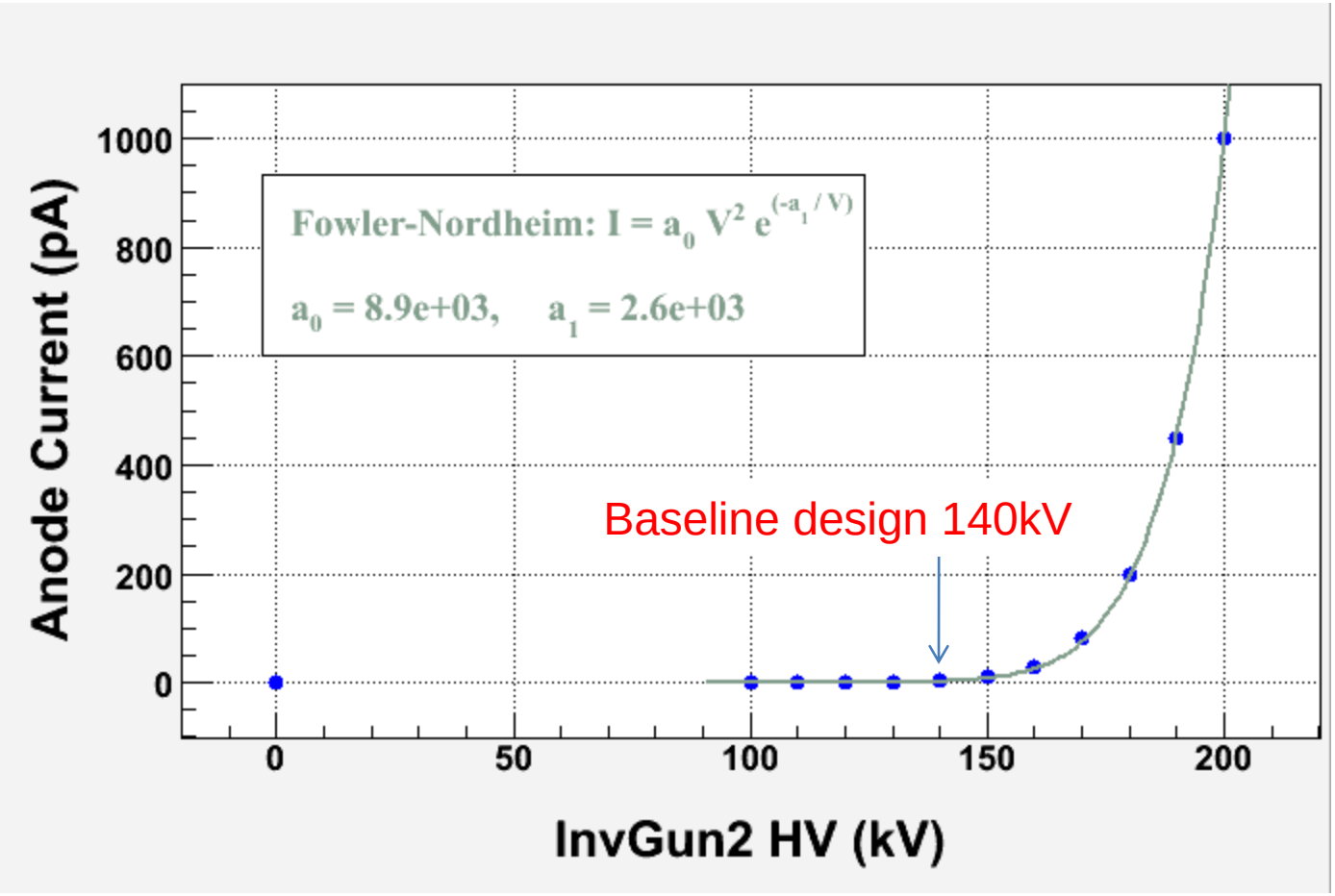

Note: We used large grain Niobium for InvGun2 cathode electrode

Work of Riad Suleiman

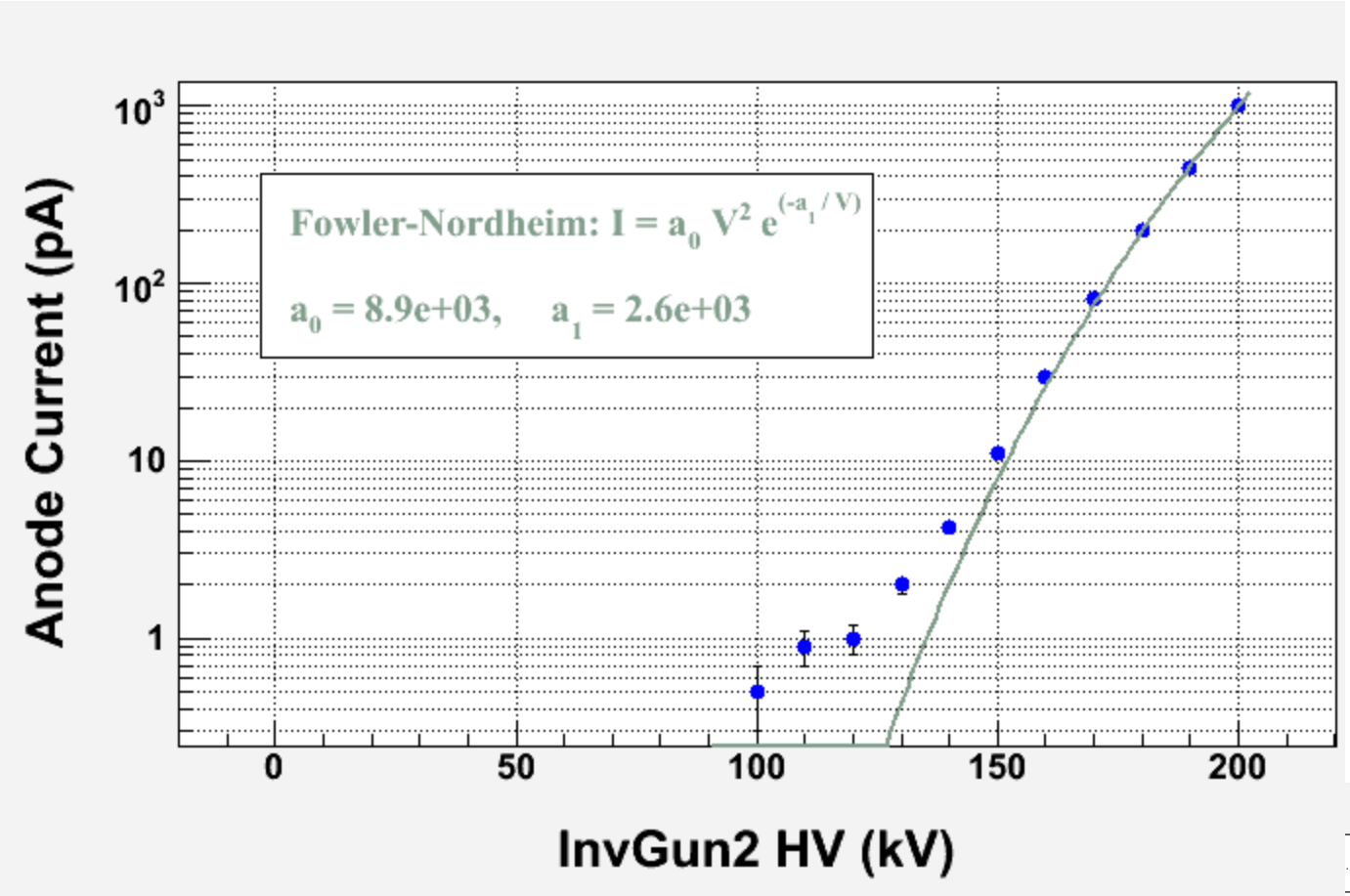

How much field emission is acceptable?
Lifetime studies will shed light……

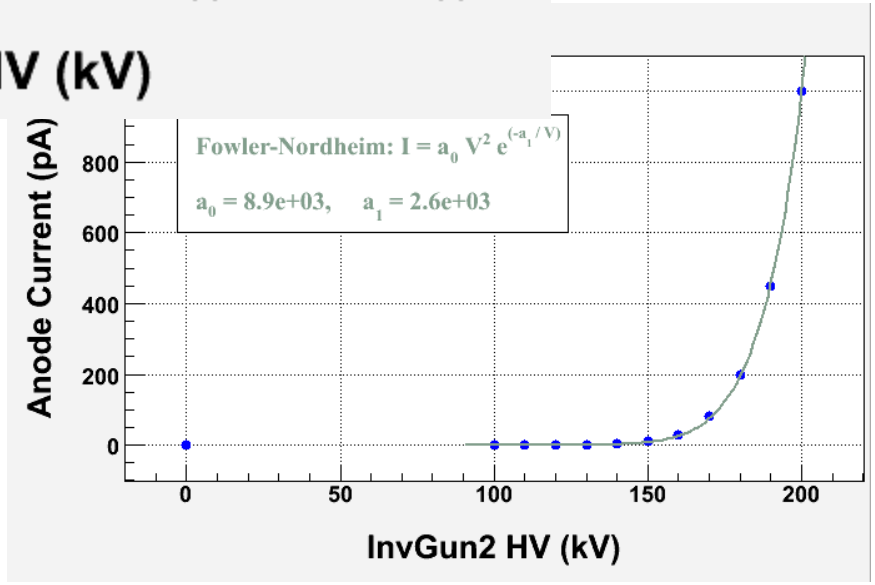

Work of Riad Suleiman

Figure 1: Highest Gradient Region

Our design has one region of "unintended" high gradient – could be problematic…..exploring new designs via electrostatic modeling

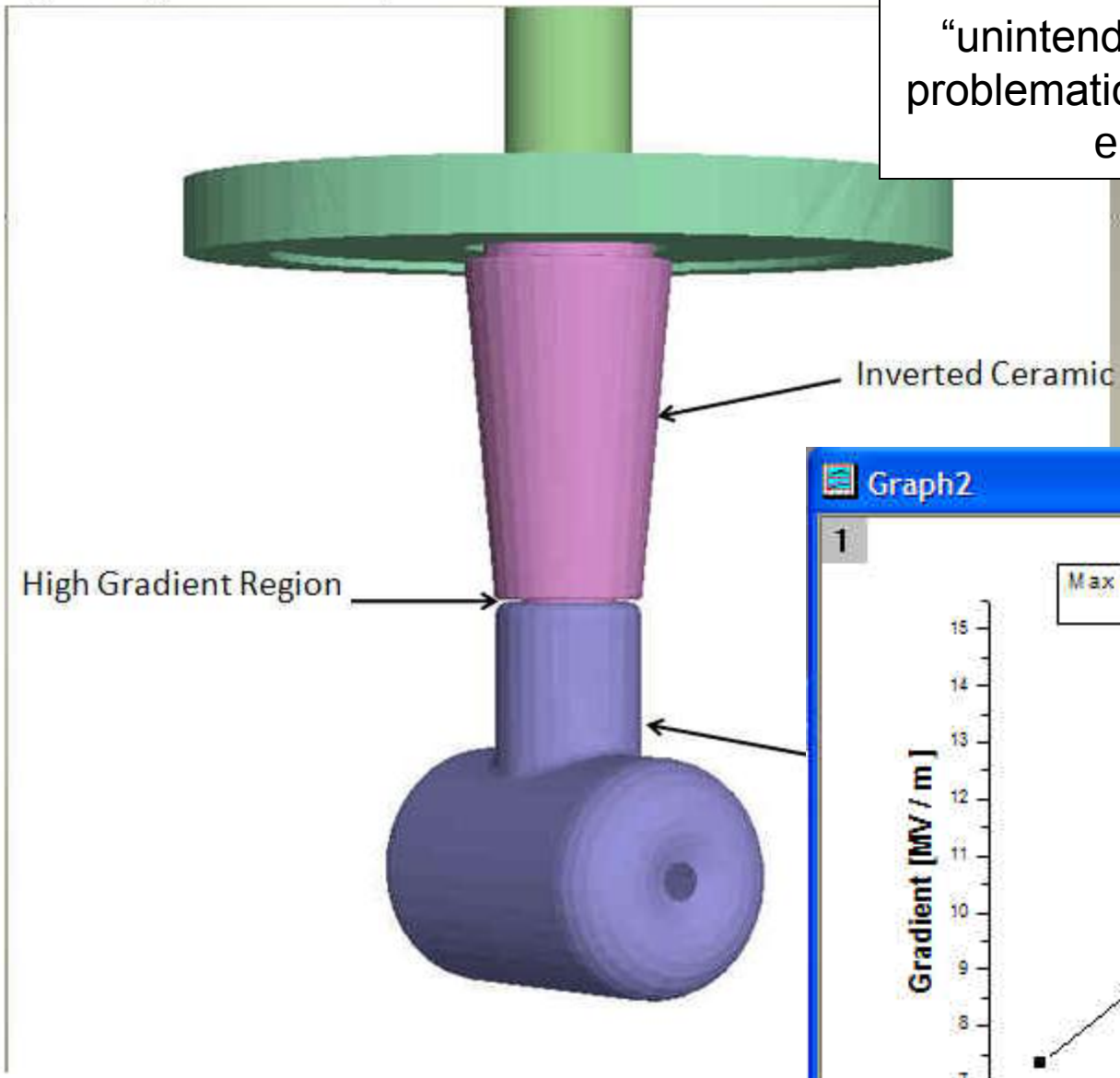

Data2 - InvCeramic Region Max ...

	A1(X)	A2(Y)
	HV [kV]	Gradient [MV/m]
1	100	7.35
2	125	9.18
3	150	11
4	175	12.9
5	200	14.7

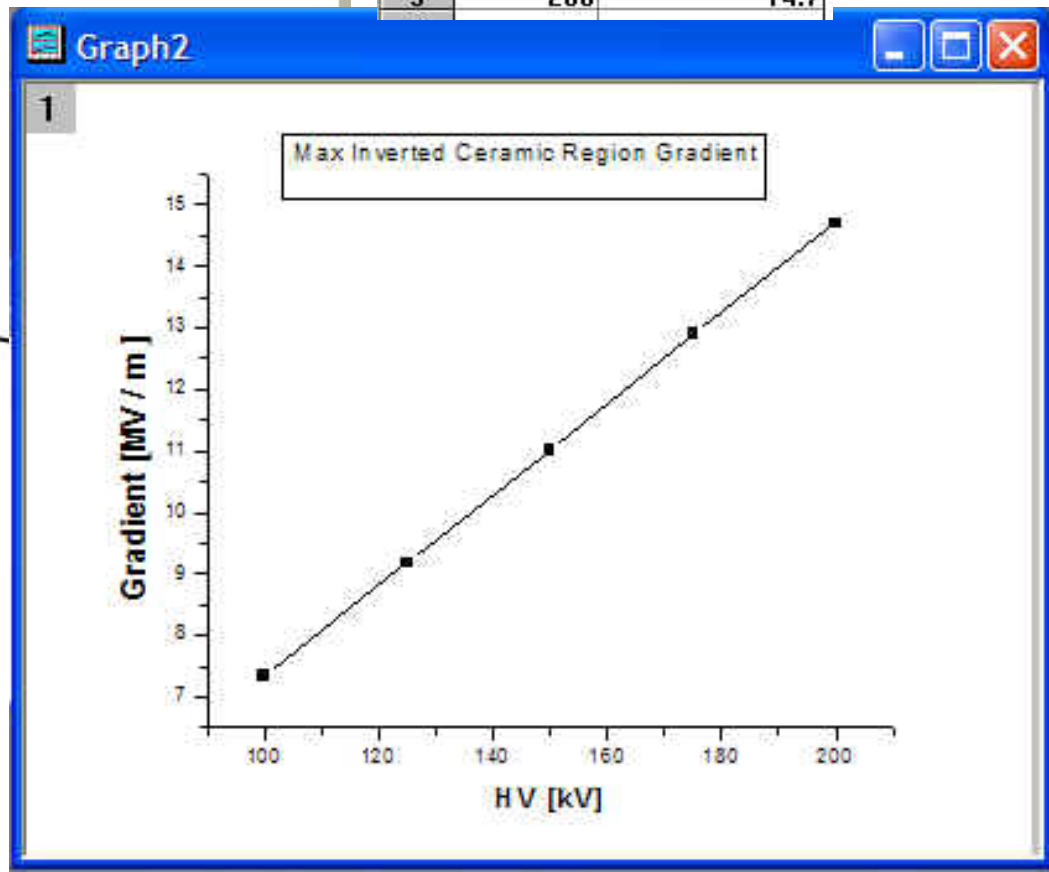

Work of Ken Surles-Law

From Al Dudas and Mike Neubauer, Muons Inc.

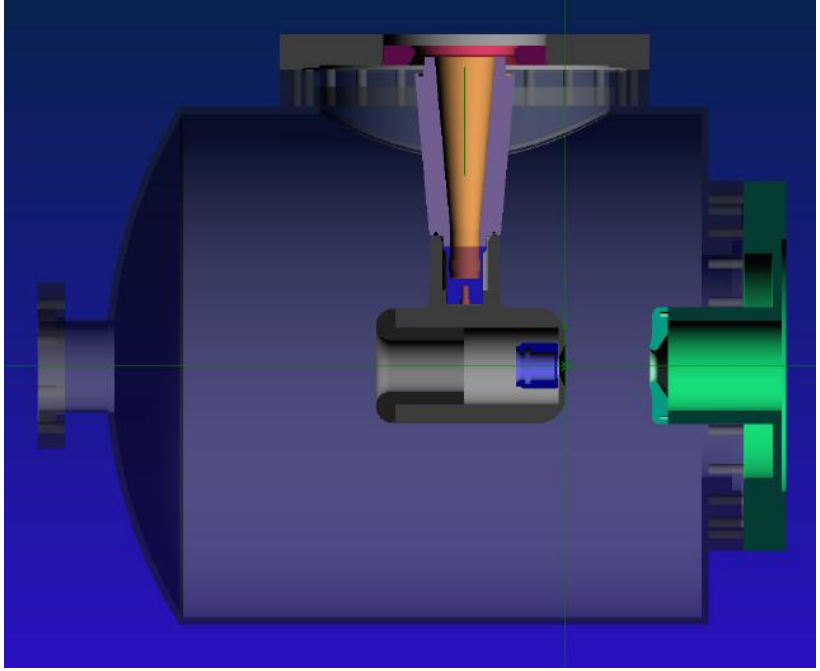

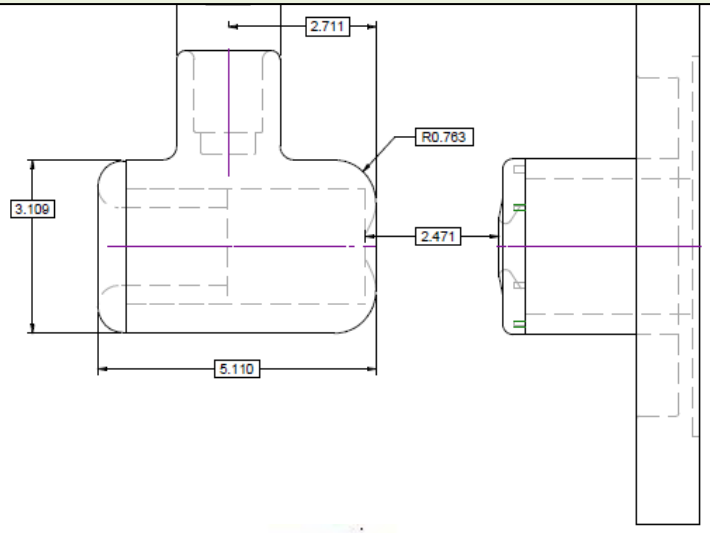

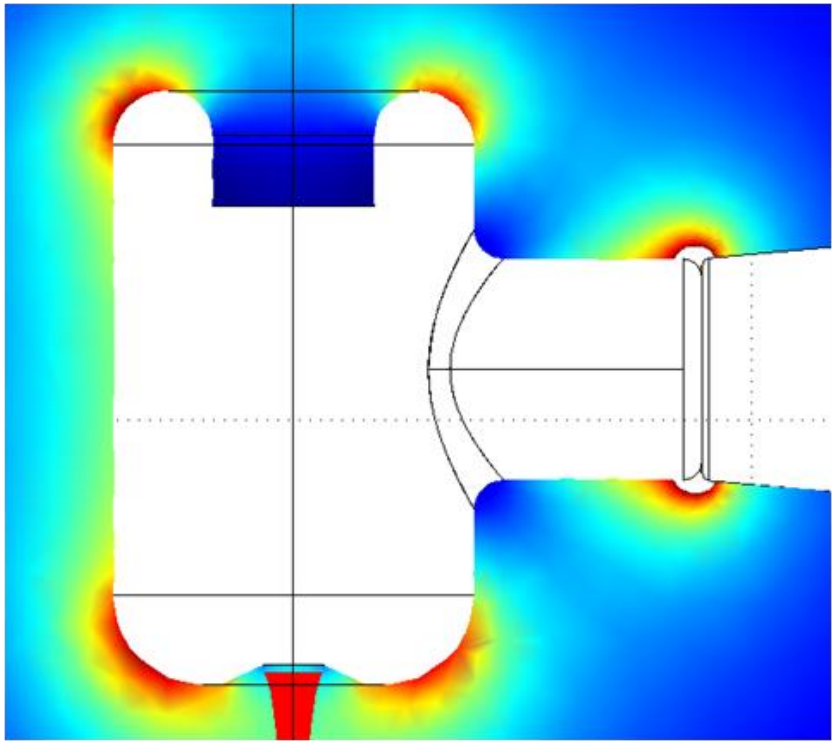

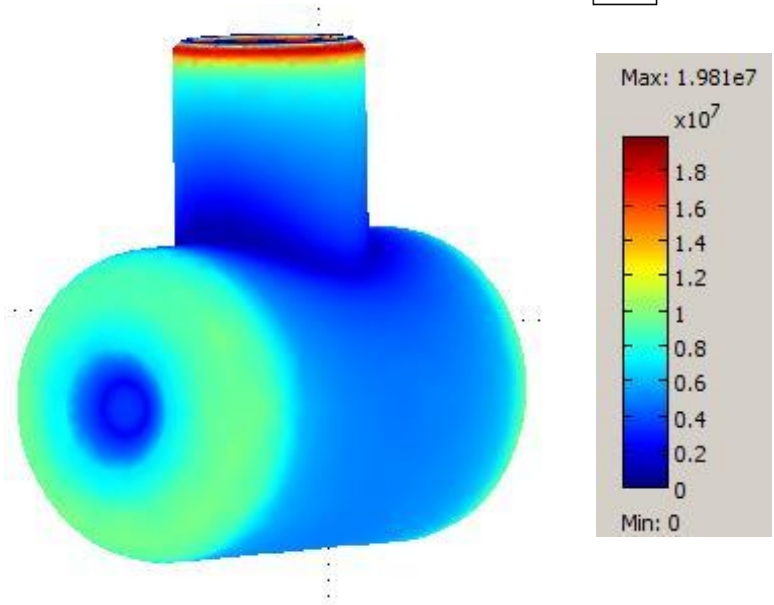

Figure 5. Calculations are from Comsol 3.4a. (a) Electrostatic calculations at 250 kV showing the regions where gradients are greater than 10 MV/m and (b) the electrode showing the maximum at about 20 Mv/m at 250 kV.

At 100kV

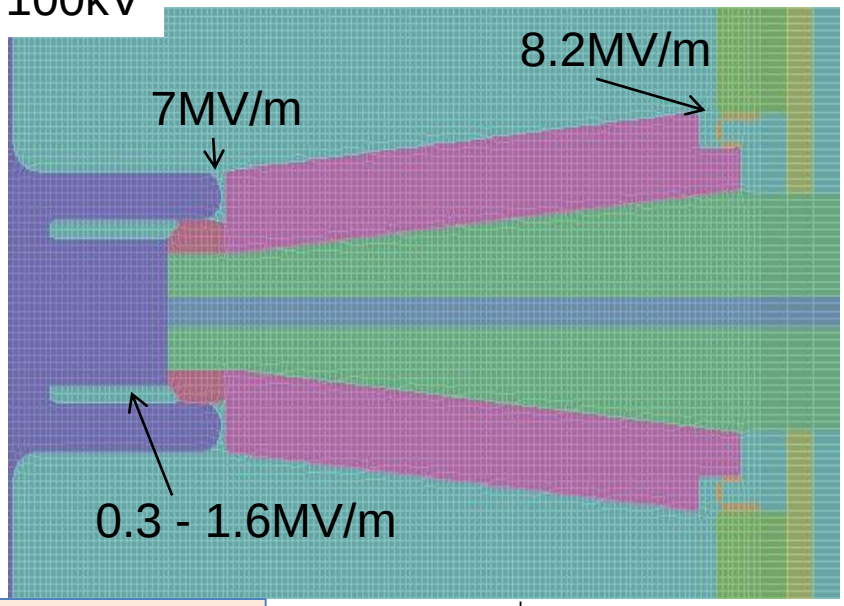

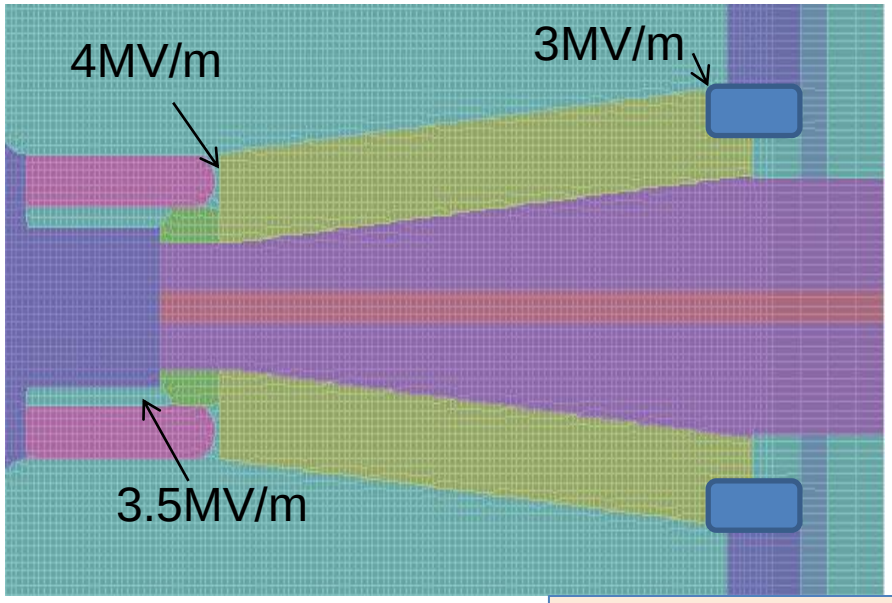

At 100kV bias

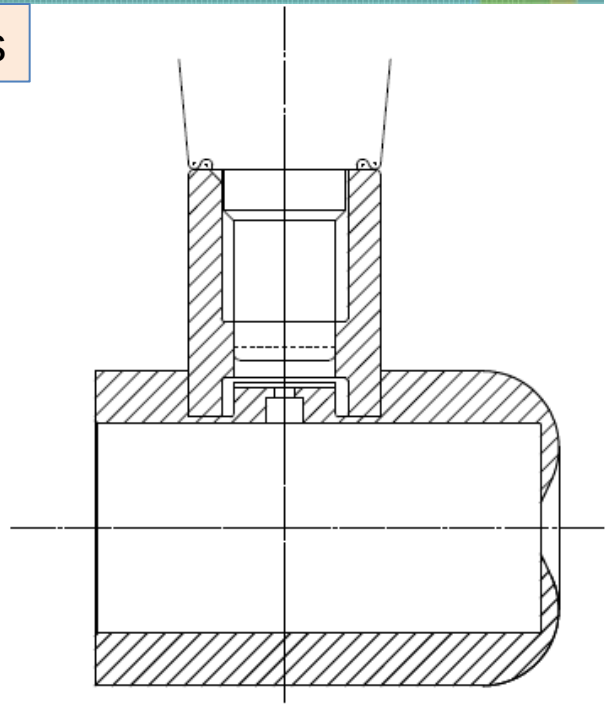

Ceramic sleeve…..

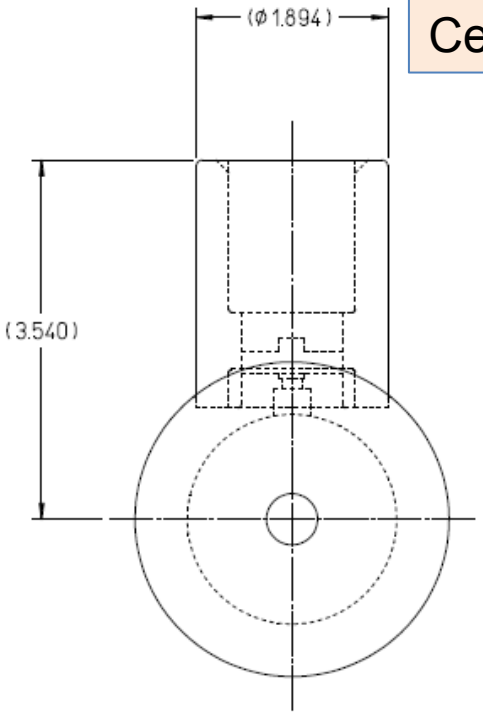

Work of Ken Surles-Law

From Al Dudas and Mike Neubauer, Muons Inc.

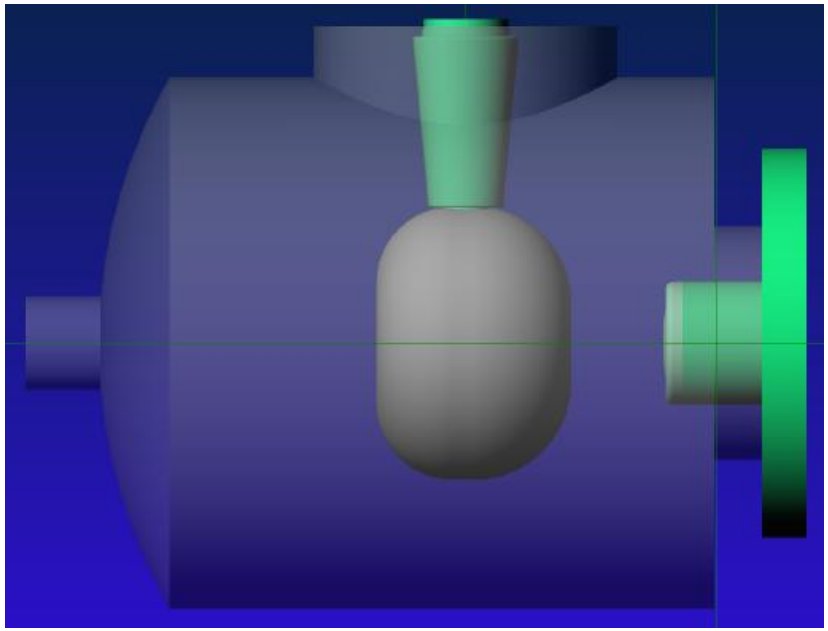

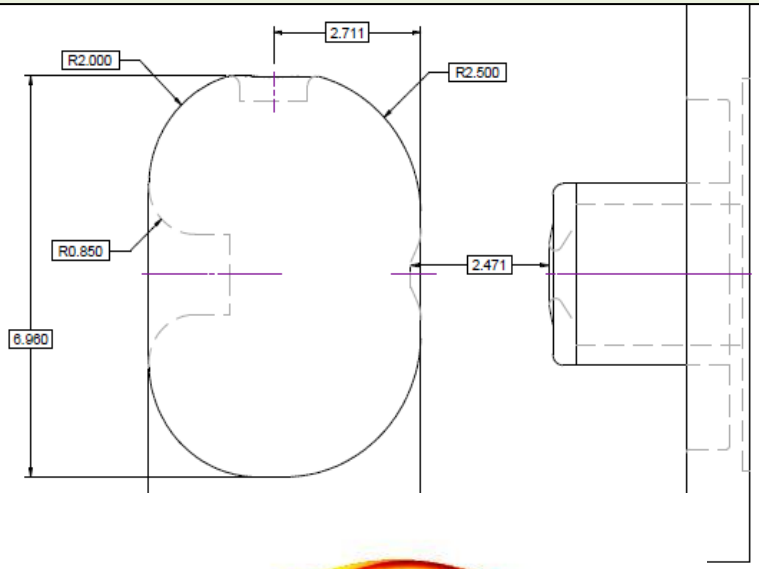

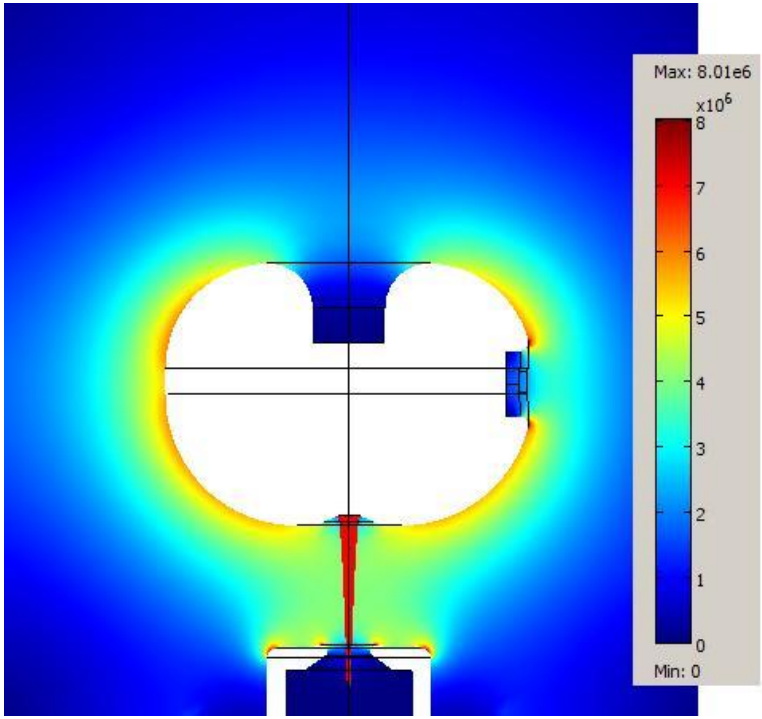

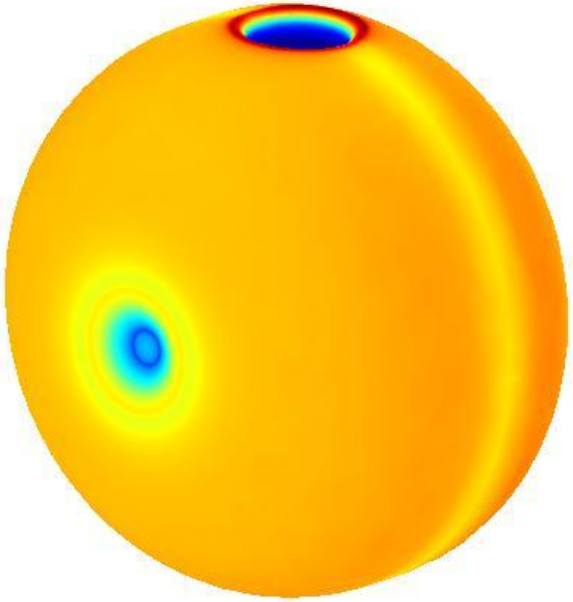

Figure 10. "Ball" type gun electrode with a side support for the inverted ceramic calculated for 250 kV. The maximum gradient was 8 MV/m and but the region around the ceramic is not shielded from the max gradient.

To-do list:

1) Operate InvGun1 at CEBAF at 140kV for Qweak experiment, Aug 2010. No FE, better transmission.
2) Operate InvGun2 at Test Cave at 200kV, ideally w/o measureable field emission. Compare lifetime 200kV bias vs 100kV bias
3) Modify InvGun2 design to eliminate field emission at bias voltages up to 225kV: try ceramic sleeve at insulator joint, spherical cathode electrode, bigger gun vacuum chamber, bigger cathode/anode gap, symmetric gun, what else? InvGun3?
4) Field emission studies: materials, polishing techniques, krypton processing, coatings
5) Need to design/manufacture the ILC gun electrodes
6) Test ILC gun at CEBAF with ILC laser during 2012

ILC Beam at CEBAF 2012

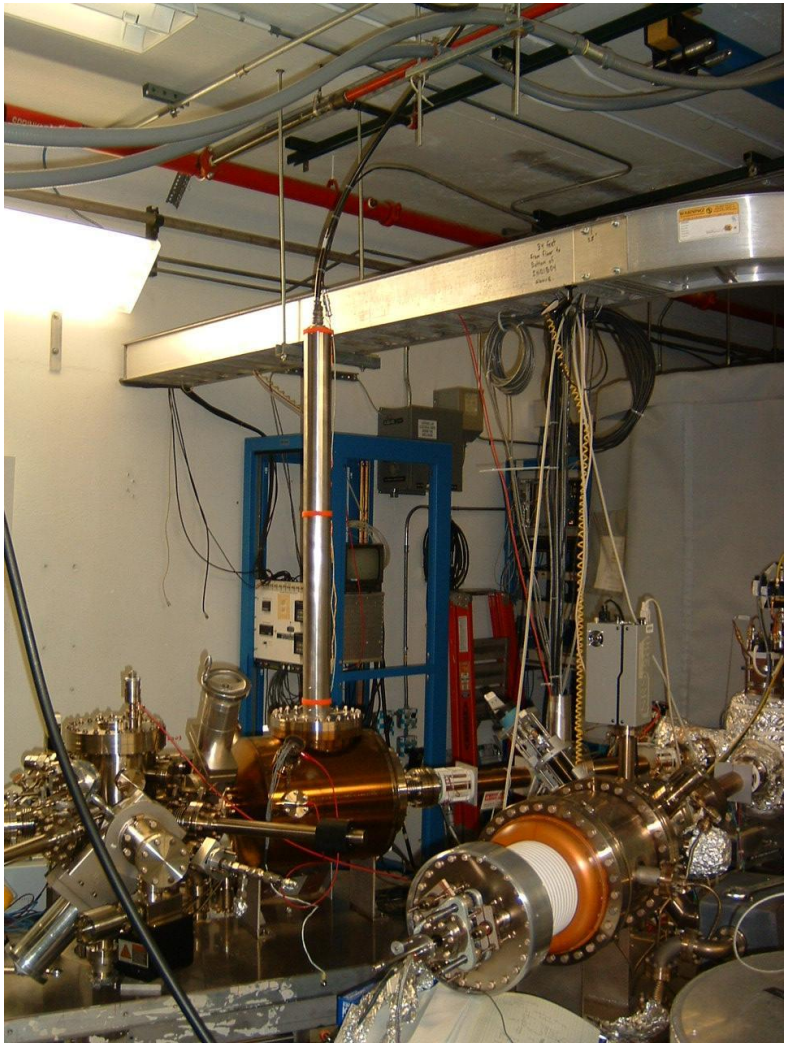

Put the ILC gun here

- Transport beam to Fcup 5m away
- Magnet configuration acceptable?
- Use buncher cavity to monitor temporal profile
- What else to measure? Polarization, Surface charge limit

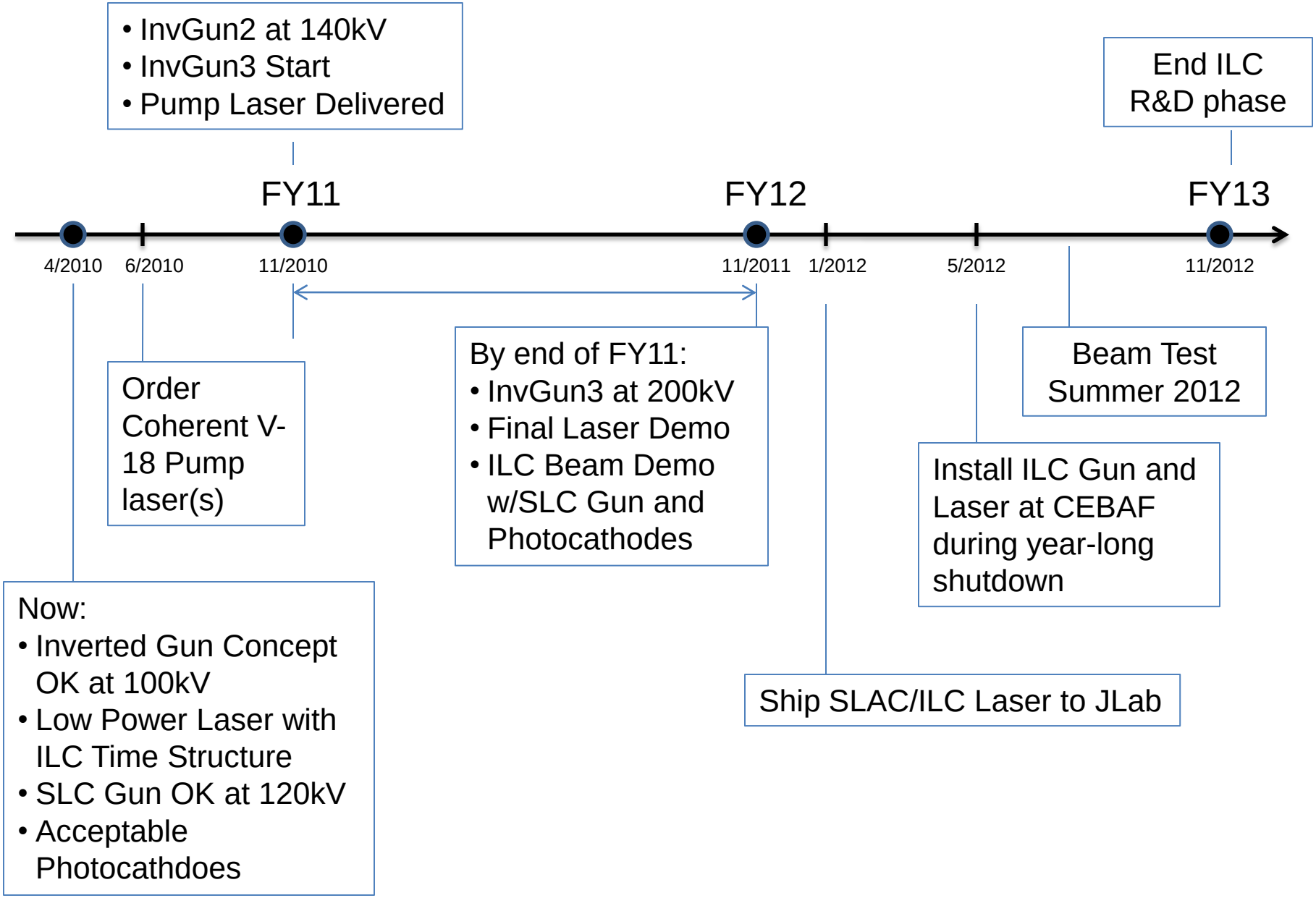

Results of 4_19_2010 mtg. at JLab
A. Brachmann, J. Sheppard, M. Poelker, M. Harrison

Back-up Slides

JLab FEL load-locked gun at very high voltage, with inverted insulators

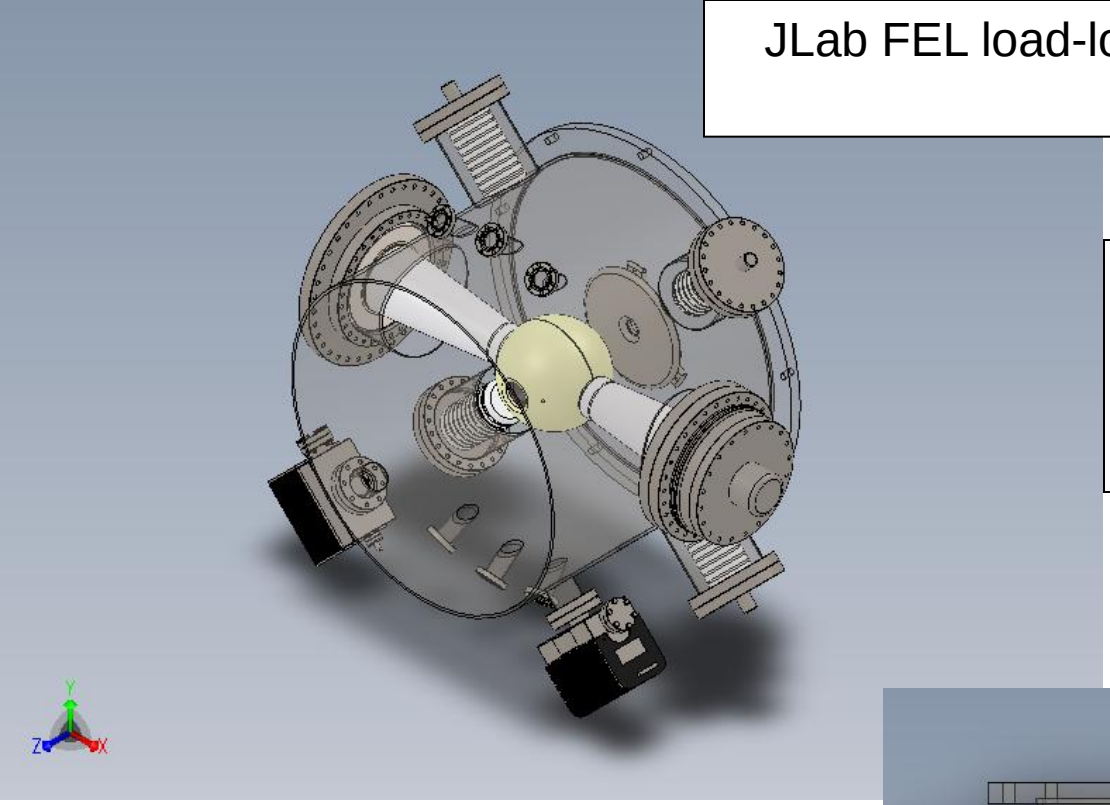

Courtesy: M. Marchlick, G. Biallis, C. Hernandez-Garcia, D. Bullard, P. Evtushenko, F. Hannon, and others from JLab-FEL

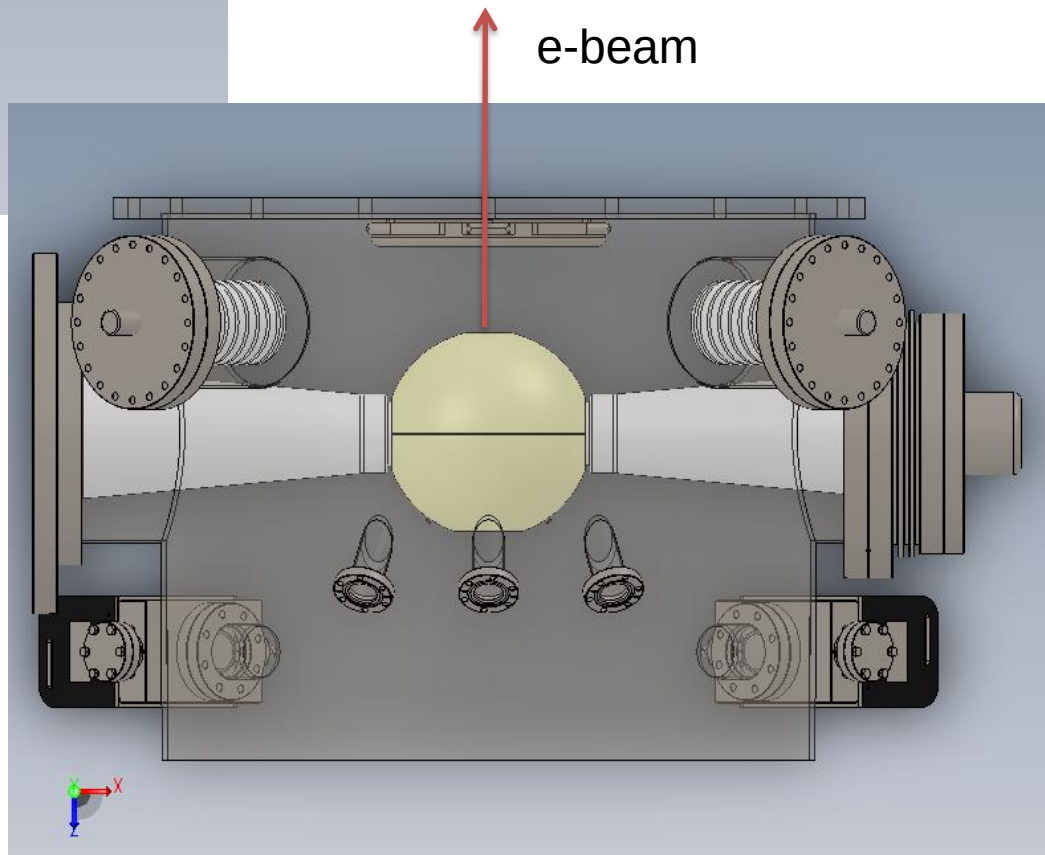

- Condition to 600kV, operate at 500kV
- 3x bigger inverted insulators
- One insulator for HV: one for cooling
- Niobium electrode – no diamond paste polishing
- Work in-progress

Cathode/Anode Design

- We learned at CEBAF that it is extremely important to manage ALL of the extracted beam
  - Anodized edge: beam from outside 5 mm active area can hit beampipe walls, degrade vacuum, reduce operating lifetime

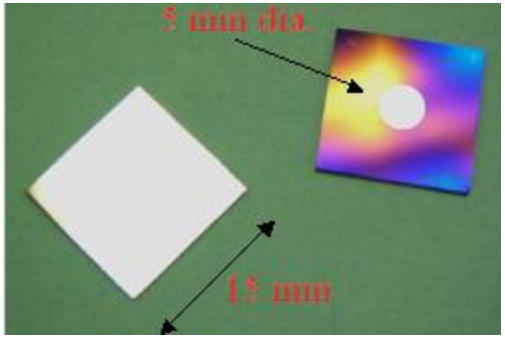

- ILC requires large laser beam to reduce current density and overcome space and surface charge problems
- Need a cathode/anode design that ensures uniform emittance across beam profile. A beam that can be easily managed/transported, with *ZERO* beam loss.

Work of Ken Surles-Law

Emittance vs. radial distance from electrostatic center
Choosing the best cathode focusing angle….

Low Bunch Charge (i.e. CEBAF)

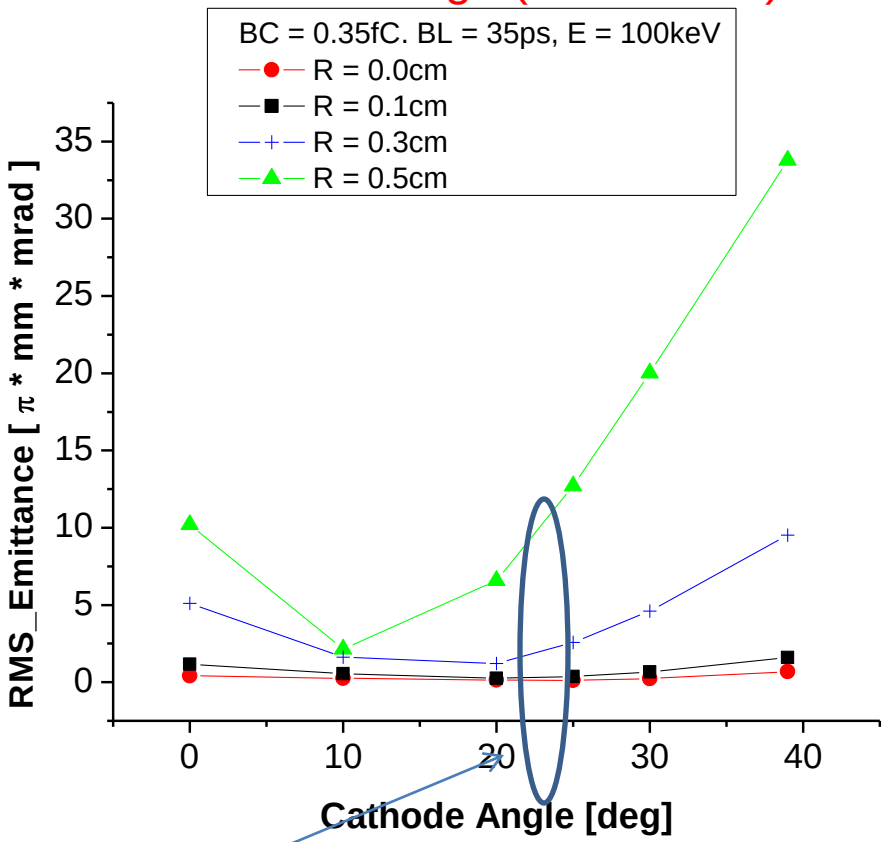

High Bunch Charge (i.e. ILC)

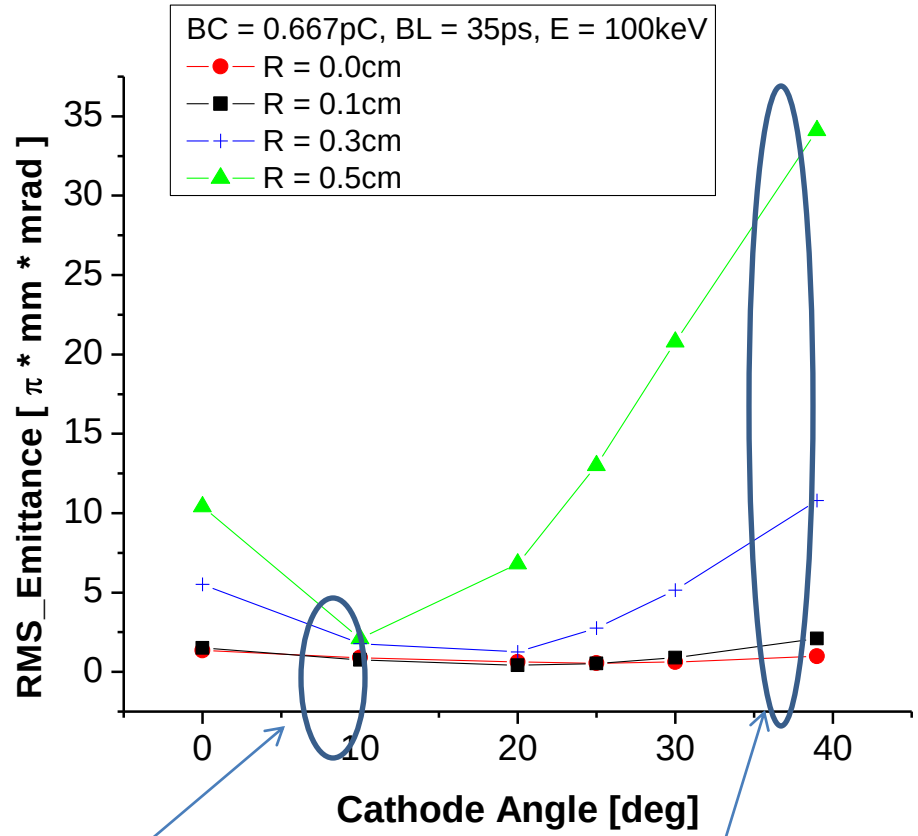

Why we can't use all of photocathode

"one" beam from gun

"many" beams from gun

Increase Gun Voltage: Why?

- Reduce space-charge-induced emittance growth, maintain smaller transverse beam profile and short bunchlength
- Address current density limitation due to Child's Law (now I claim not much an issue for ILC, not an issue for CLIC)
- (Maybe?) Reduce problems associated with surface charge limit (i.e., QE reduction at high laser power)
- (Maybe?) Prolong Operating Lifetime

Space Charge Limit (my old slide)

Child's Law

$$j_0 = \left(2.33\times10^{-6}\right) V_0^{3/2} / d^2$$

V (kV)	j_0 (A/cm^2)
100	7
140	14
200	23
350	53

Comparable to ILC/CLIC current density…

Assume 3cm cathode/anode gap
ILC peak current ~ 4.8A and Current density j = 6 A/cm^2 for 1cm diameter laser

Suggests ILC/CLIC current density comparable to Child's Law current limit…. but not to worry…..

Space Charge Limit

Child's Law (1D): $j_1 = \left(2.33\times10^{-6}\right) V^{3/2}/d^2$

Child's Law (2D) (PRL **87**, 278301) : $j_2 \cong j_1\left(1+\frac{1}{4}\frac{d}{r}\right)$

Short Pulse (PRL **98**, 164802): $j_{SCL} = j_2\left(2\frac{1-\sqrt{1-3X_{CL}^2/4}}{X_{CL}^3}\right),$

$$X_{CL} = \frac{t_b}{\tau}$$

V	Gun voltage
d	Cathode/anode gap (3 cm)
r	Laser spot size (1 cm = $2r$)
t_b	microbunch length (100 ps)
τ	Gap transit time (0.48 ns @ 100 kV)

ILC with long microbunch…
won't reap "short pulse" benefit

Space Charge Limit – Not an Issue

1D SCL does not apply (i.e. we don't have infinite charge plane)
ILC conditions – with finite beam size 2D - push Child's Current Limit higher…..
CLIC short-bunch condition pushes current limit higher still…..

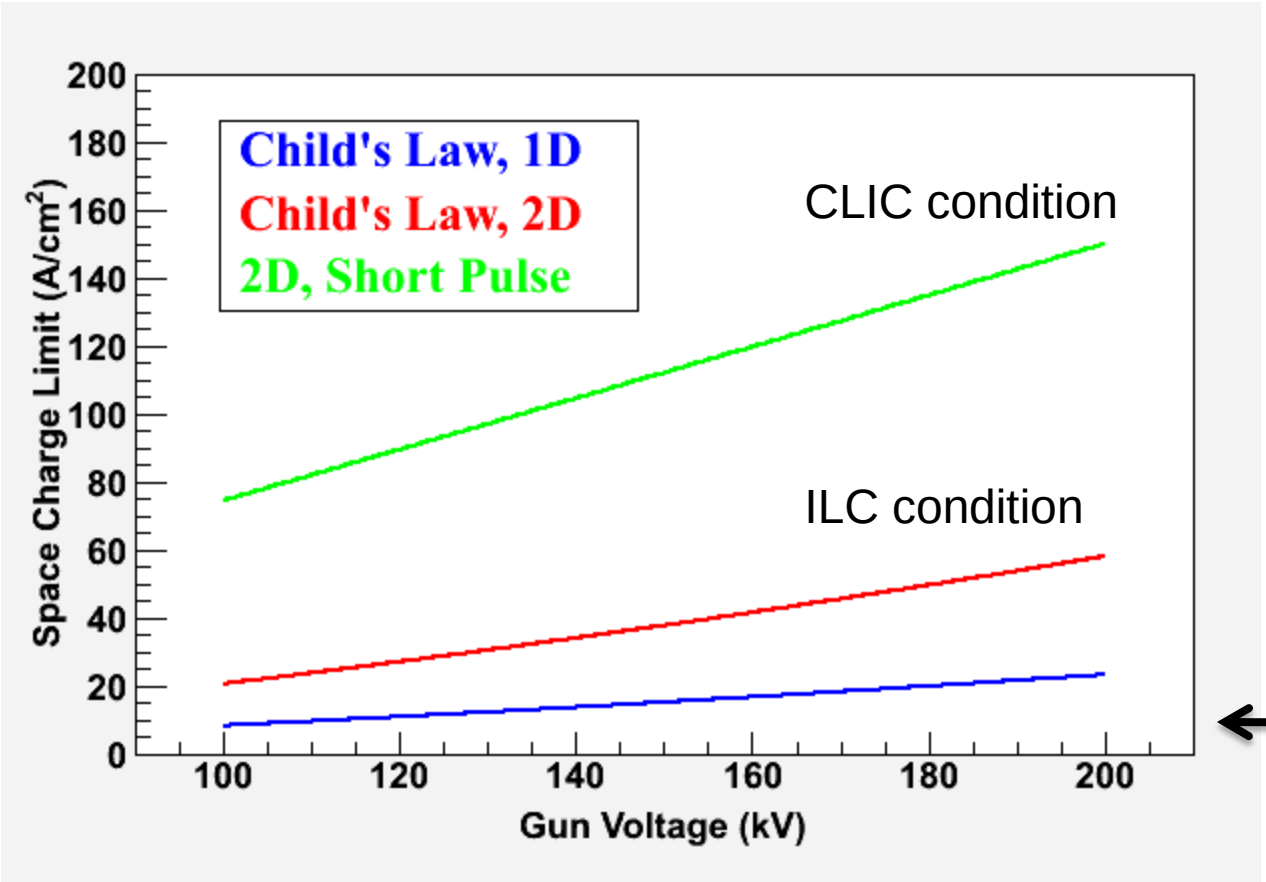

CLIC/ILC current density

Thanks to Riad Suleiman

Increase Gun Voltage: Why?

- Reduce space-charge-induced emittance growth, maintain smaller transverse beam profile and short bunchlength
- Address current density limitation due to Child's Law (now I claim not much an issue for ILC, not an issue for CLIC)
- (Maybe?) Reduce problems associated with surface charge limit (i.e., QE reduction at high laser power)
- (Maybe?) Prolong Operating Lifetime

Surface Charge Limit

QE reduction at high laser power

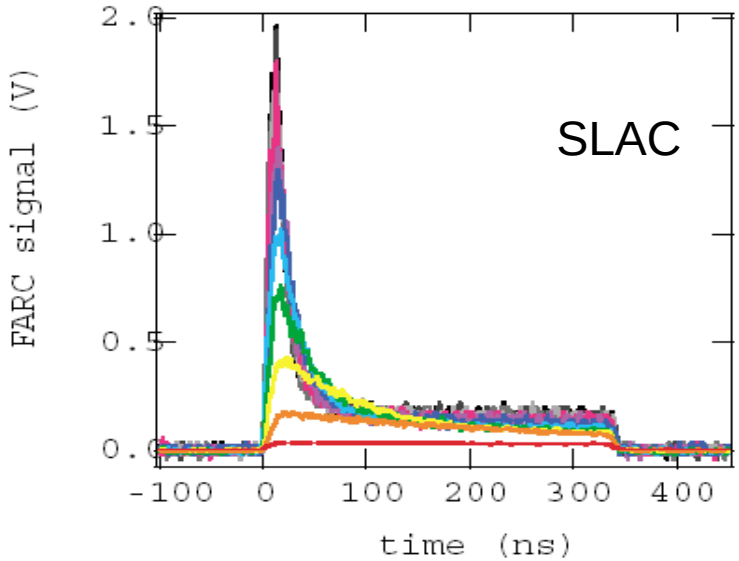

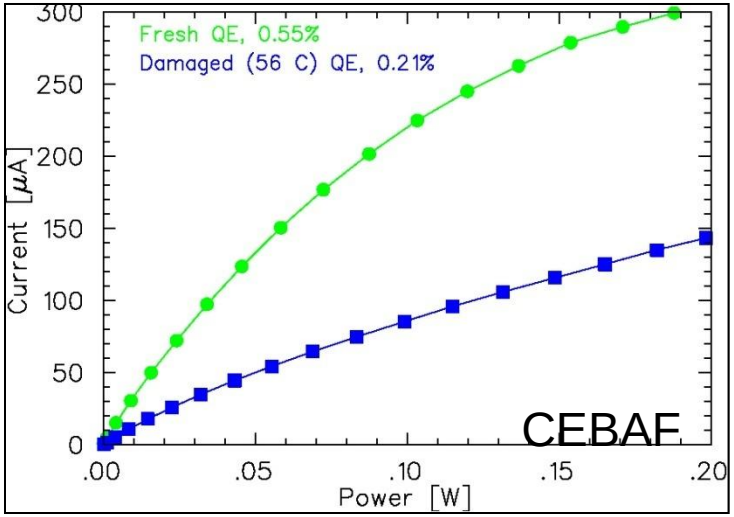

Nagoya

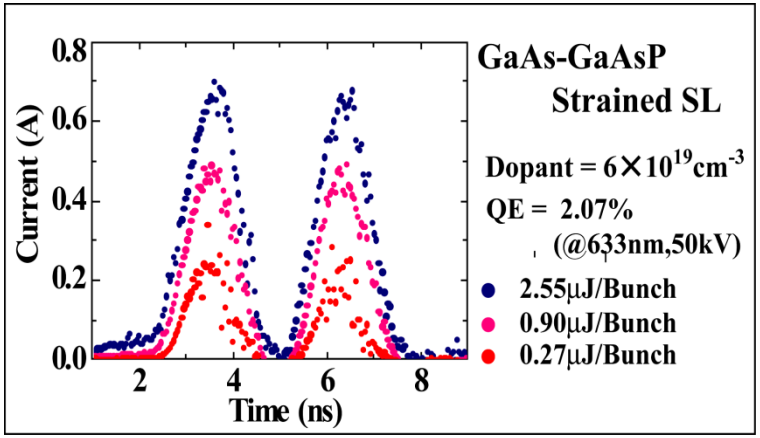

Peak to peak spacing 2.8ns, bunchwidth 0.7ns, Charge: 1nC/bunch

Heavily doped surface: viable solution?

5.5 A/cm2 @ SLAC for 780 nm, 75 ns pulse
9.7 A/cm2 @ Nagoya for 780 nm, 30 ps

ILC/CLIC current density comparable to these values…something to worry about. Need to identify factors that lead to SCL, Will higher voltage help?

Increase Gun Voltage: Why?

- Reduce space-charge-induced emittance growth, maintain smaller transverse beam profile and short bunchlength
- Address current density limitation due to Child's Law (now I claim not much an issue for ILC, not an issue for CLIC)
- (Maybe?) Reduce problems associated with surface charge limit (i.e., QE reduction at high laser power)
- (Maybe?) Prolong Operating Lifetime

Improve Lifetime with Higher Bias Voltage?

Ionization cross section for H_2

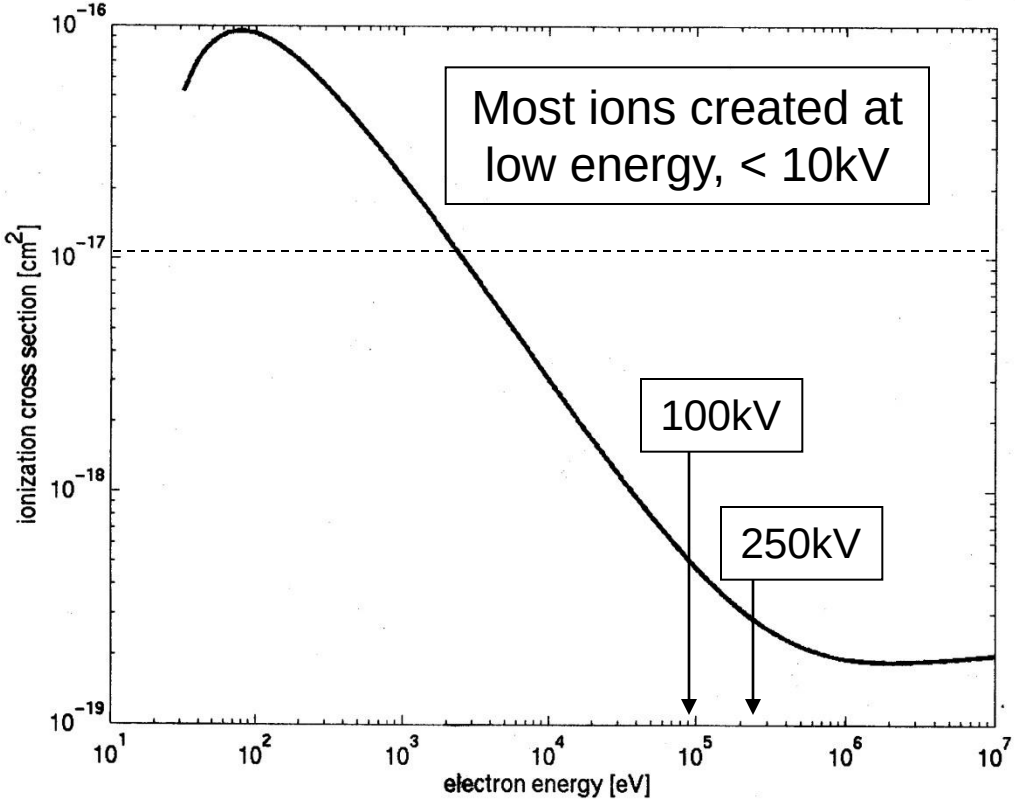

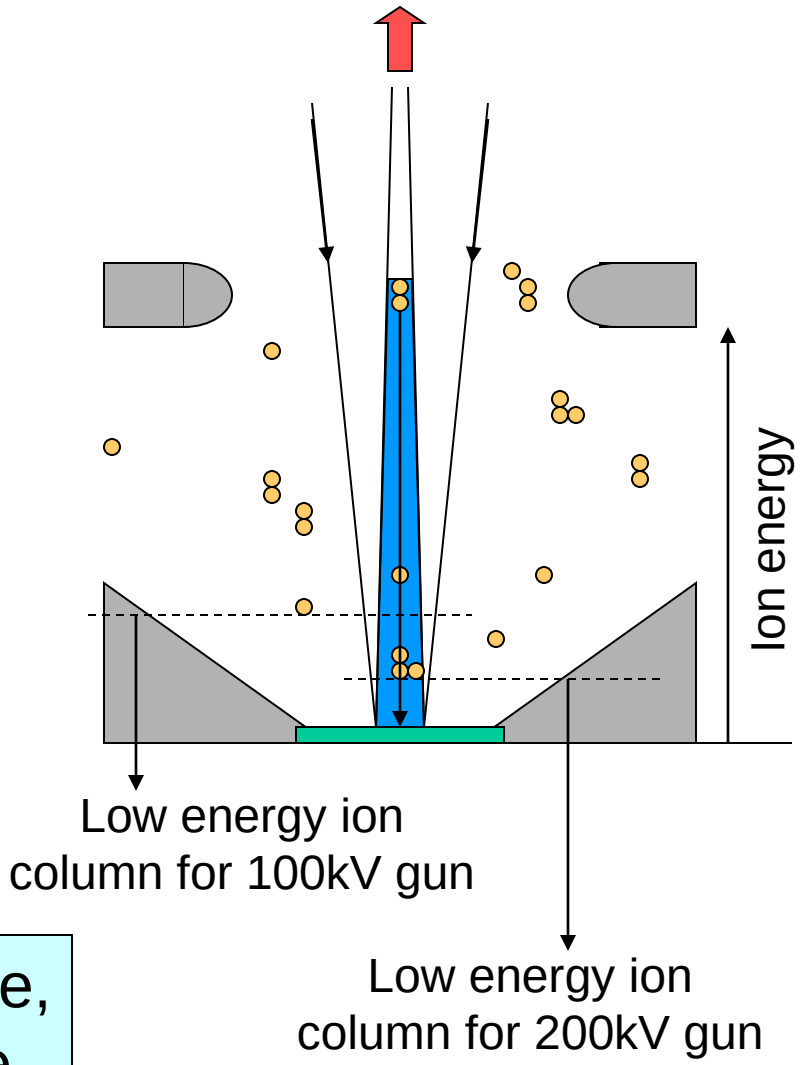

Hypothesis: Double the gun voltage, halve the # of “bad” ions, improve lifetime by 2

CEBAF 100kV vent/bake polarized electron source

- Two-Gun Photoinjector - One gun providing beam, one “hot” spare
- vent/bake guns – 4 days to replace photocathode (can’t run beam from one gun while other is baking)

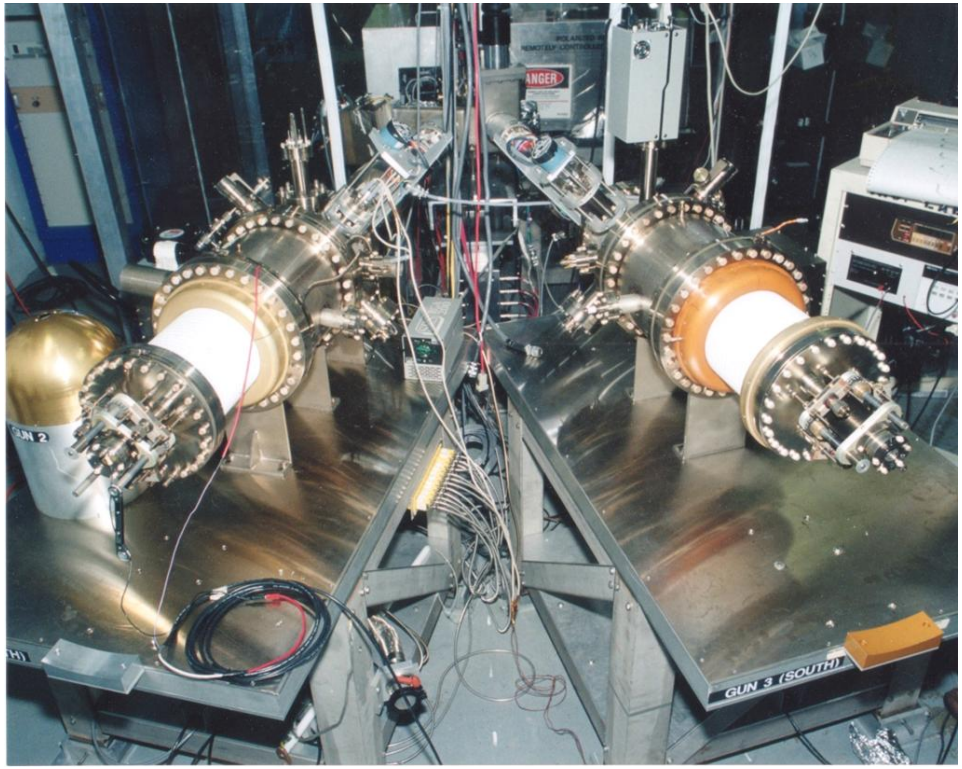

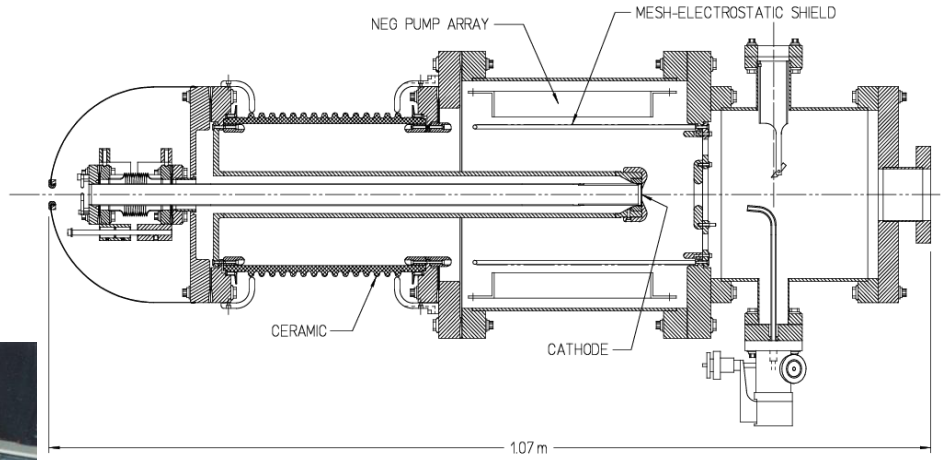

- Activate photocathode inside gun – no HV breakdown after 7 full activations (re-bake gun after 7th full activation)
- HV breakdown after just 4 activations when Ti-alloy electrodes are used
- Infrared drive laser light: operate at bandgap, 35ps FWHM, 499MHz
- Extract ~ 2000 Coulombs per year
- Beam current ~ 100uA, laser 0.5mm dia., lifetime: ~ 100C, 1×10^5 C/cm^2

Preparing for Demanding New Experiments

Vent/Bake Guns: need improvement

- Difficult to meet demands of approved high current/high polarization experiments like PRex (100uA) and Qweak (180uA and 1-year duration).
- Our vent/bake guns can provide only ~ 1 week operation at 180uA
- 12 hours to heat/reactivate, four days downtime to replace photocathode

Design Goal for New Gun: One Month Uninterrupted Operation at 250uA (~ 150C charge lifetime and 4 "spots"), One Shift to Replace Photocathode

Solution:

(1) LLGun for quick photocathode swap, (2) better vacuum and, (3) higher bias voltage

LLGun#1 Lifetime at CEBAF

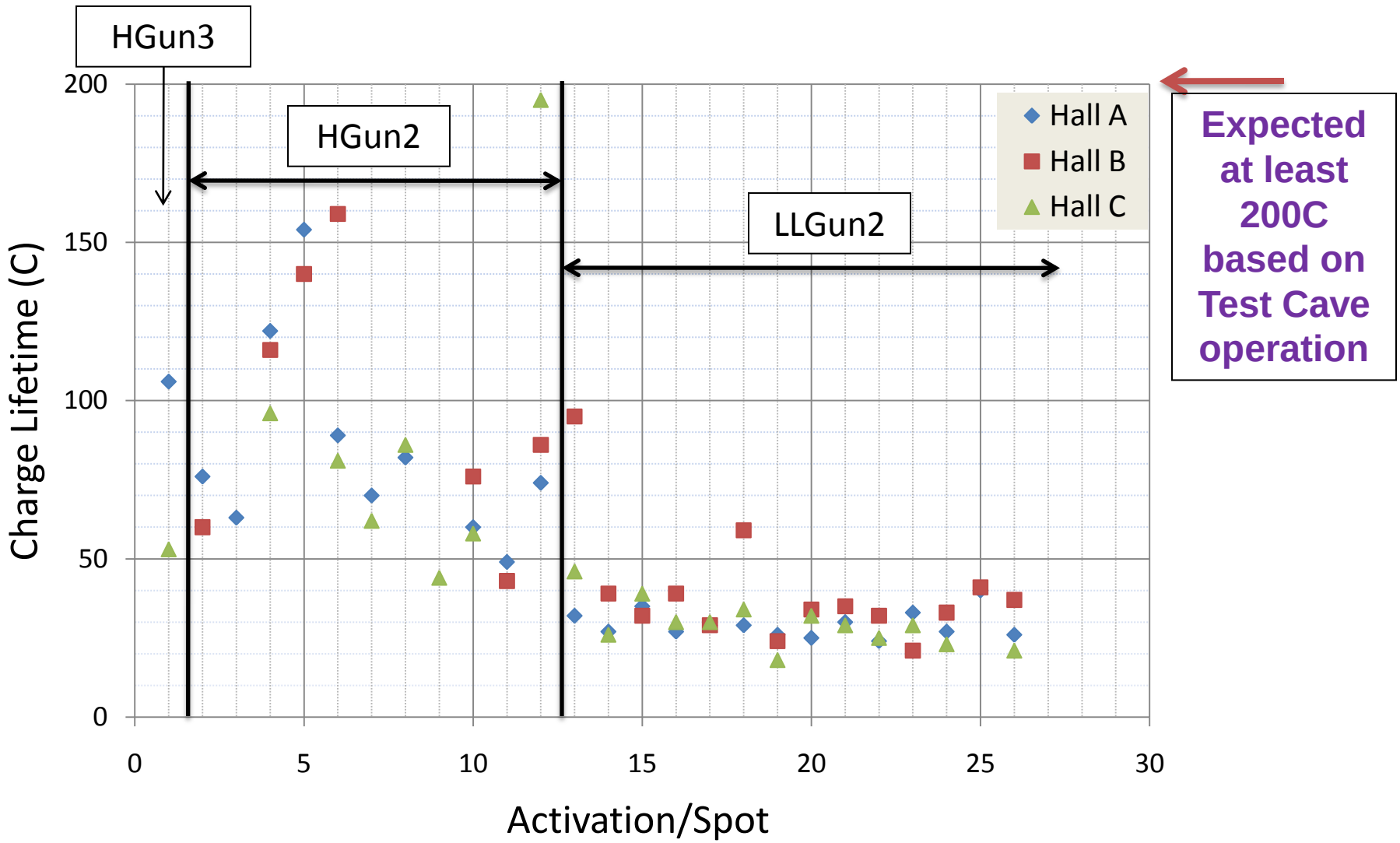

Why only 30C lifetime? Much better performance at Test Cave

High Temperature Bake to Reduce Outgassing Rate

- As much “thin-wall” material as possible
- 316LN (L= low carbon, N= nitrogen added for hard knife edges)
- Manufactured and electropolished by NorCal
- 400C bakeout for 9 days, under vacuum
- Pumped by oil-free turbo, then added ion pump, while monitoring “effluent” with RGA
- At 9th day, vacuum still improving by ~15% per 24 hours
- RGA shows H2, methane, CO and HCl (from electropolishing)
- Rate of Rise method, with spinning rotor gauge, outgassing rate 10^{-13}TL/scm^2, one order of magnitude improvement
- Vented and remeasured good rate, on test chamber
- Now working to de-gas internal components…

From Al Dudas and Mike Neubauer, Muons Inc.

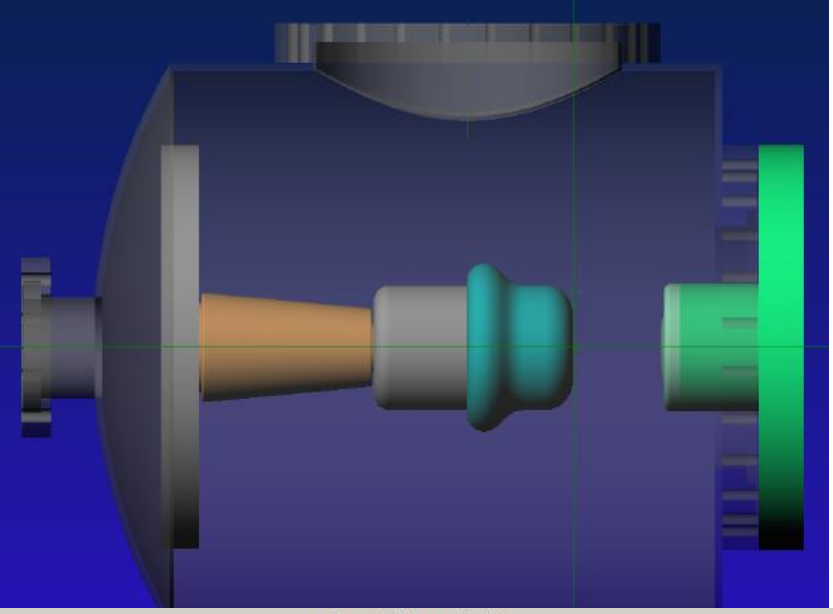

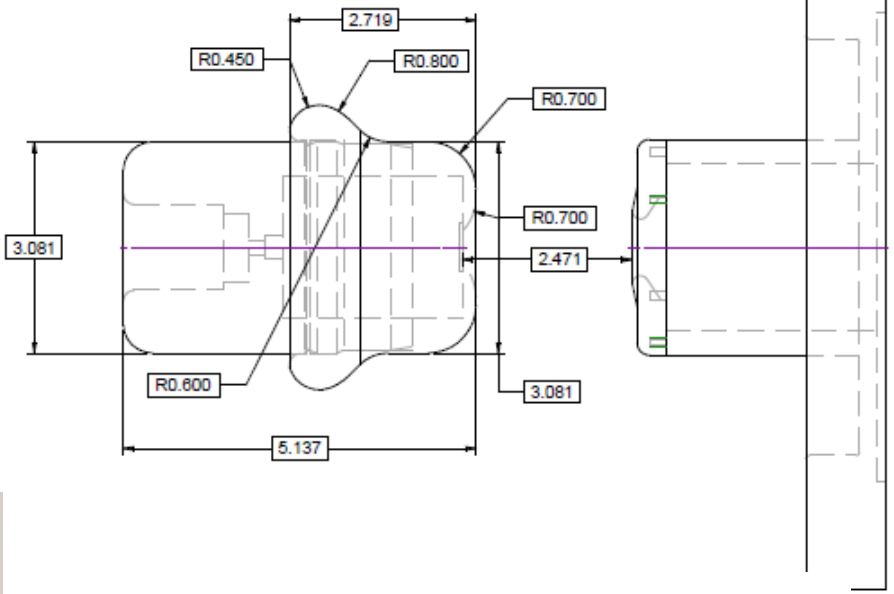

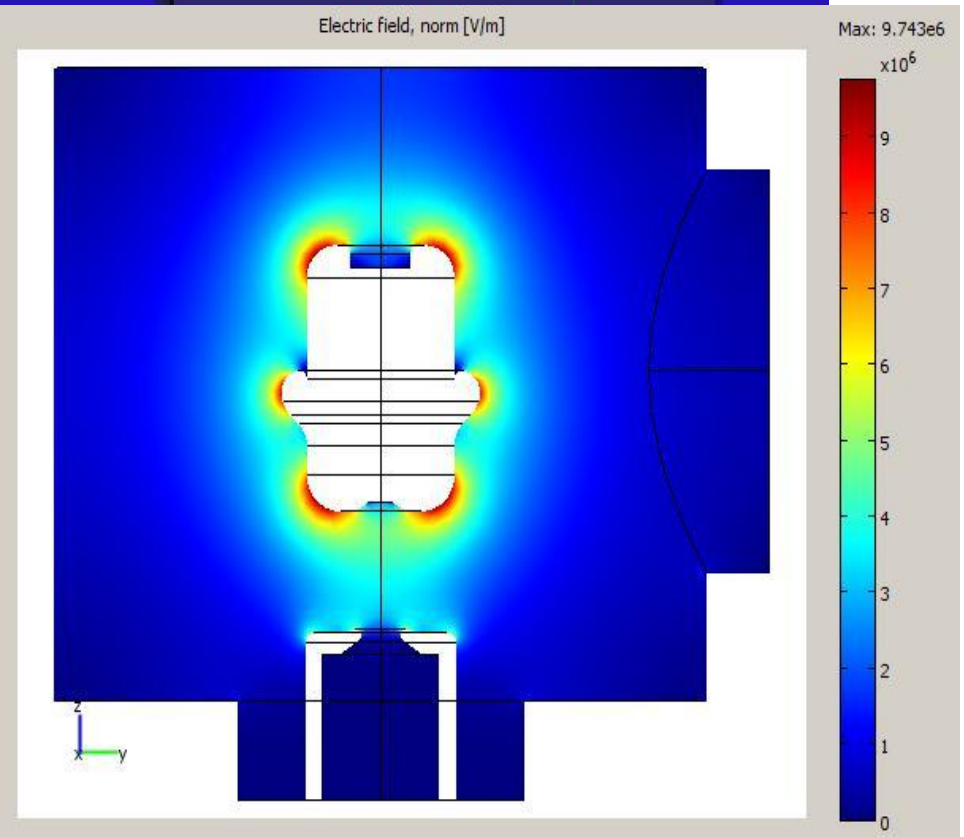

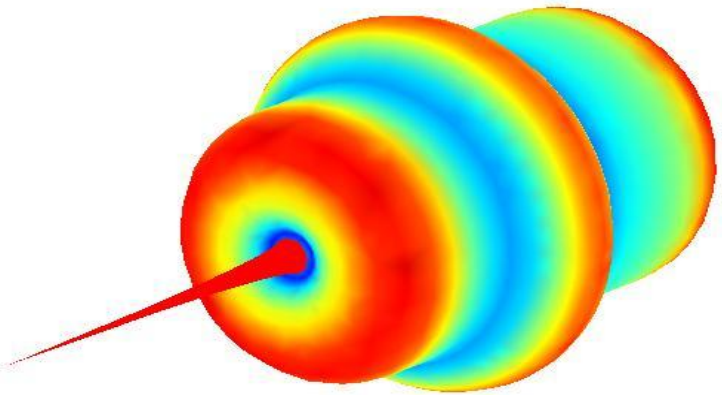

Figure 16. Electrostatic results of the symmetrically supported gun with an inverted ceramic. The max gradient is 9.74 Mv/m at 250 kV

CEBAF Inverted Gun at voltage > 100kV?

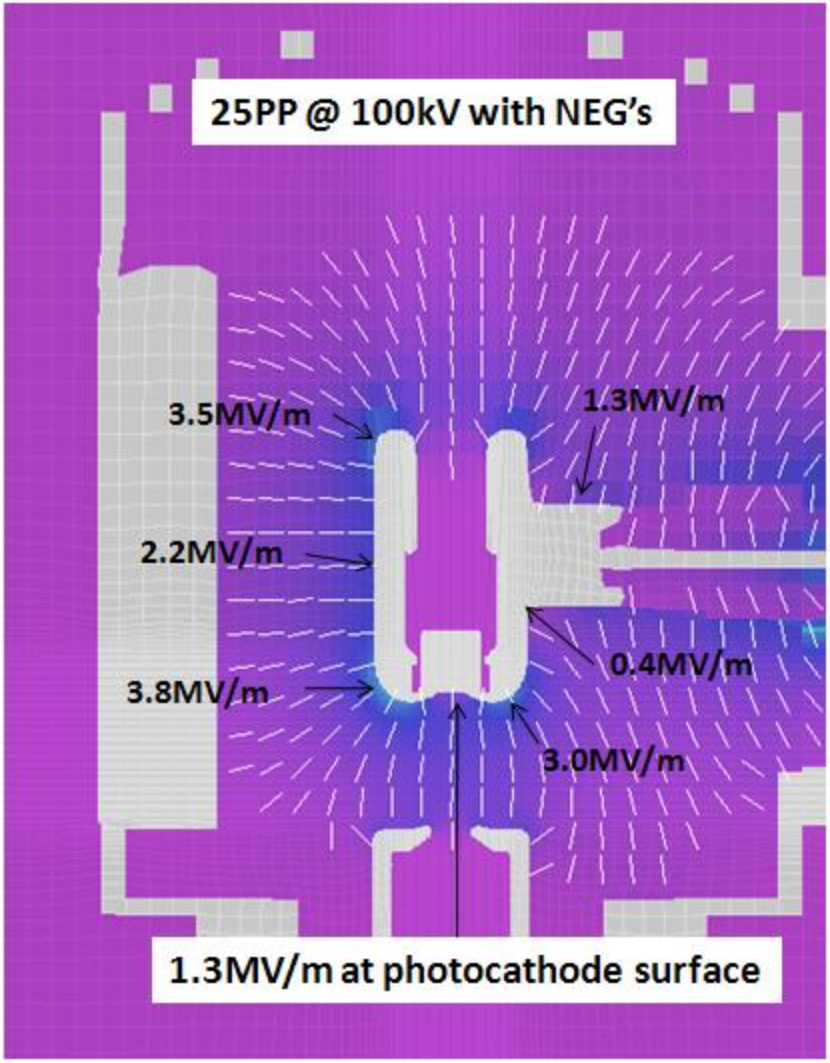

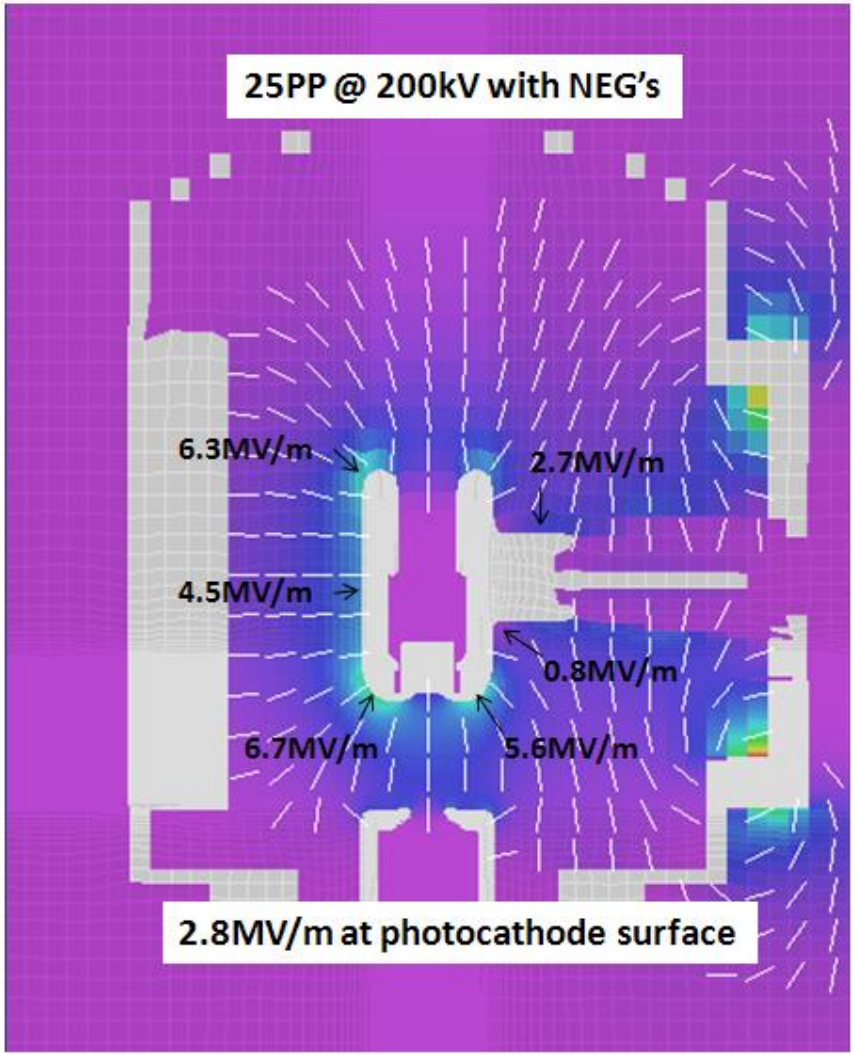

Presently limited to 150kV at CEBAF (system compatibility, e.g., pss, blue tank):
150 kV would provide "safe" gradient and likely markedly better transmission,
And still get two Wien beamline…

Work of Ken Surles-Law

InvGun2 : Good Lifetime at 2mA and 100kV bias

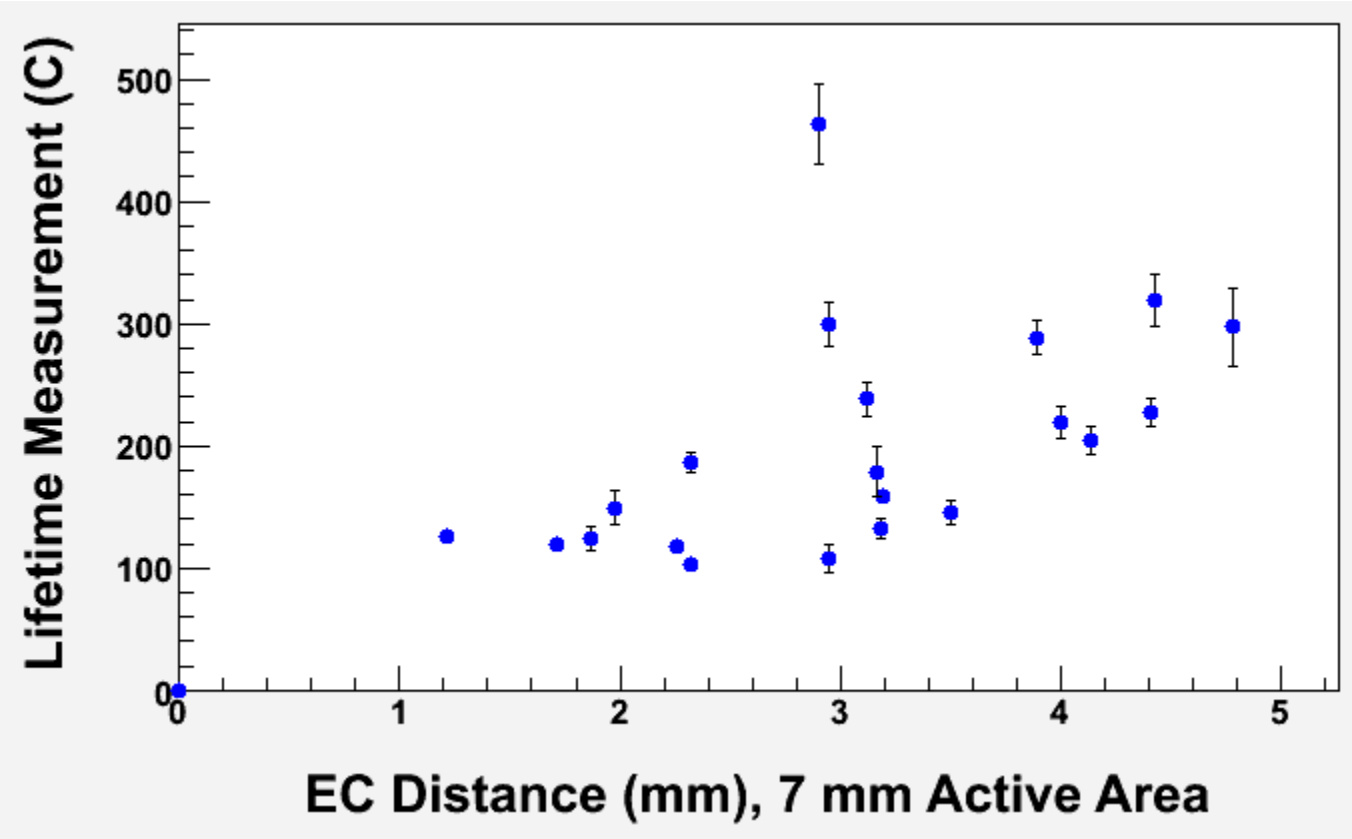

Work of Riad Suleiman