Positron Rate Monitor

Previous Measurement at the Idaho Accelerator Center

A Jlab source design

Idaho Accelerator Center

Electrons

1.2 MeV DC Accelerator
4 MeV LINACs
10 MeV Induction Accel. (~10 kA)
(4) 25 MeV LINACS
45 MeV Short Pulse LINAC (upgrade)
+ BOEING FEL (100 MeV at 100 mA CW)

Ions

2 MeV Van de Graff

Founded in 1996

3,500 m^2 Lab Space

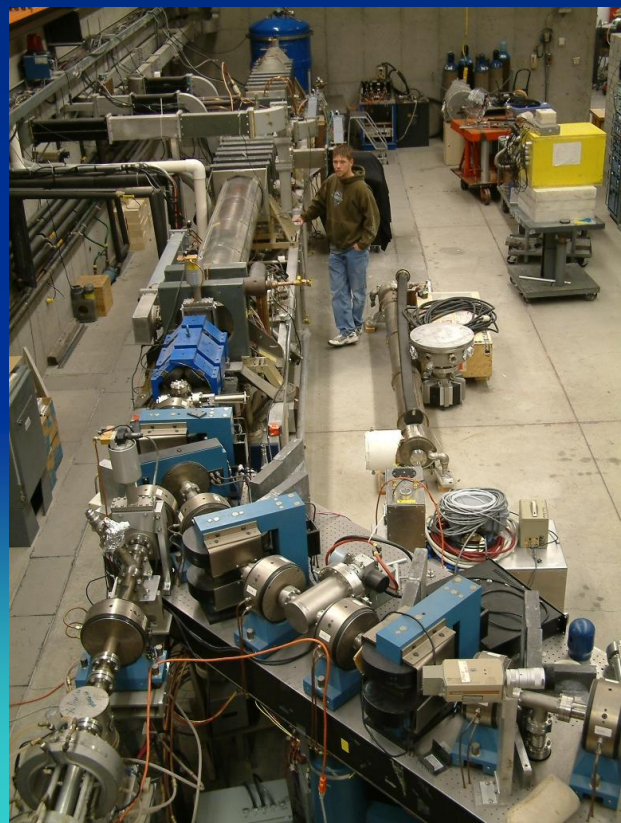

February Test

Quad = 24 cm Phys.Length & 1 inch aperture radius

Feb 2008: Can we see positrons?

Experimenters:
S. Golge
A. Freyberger
T. Forest

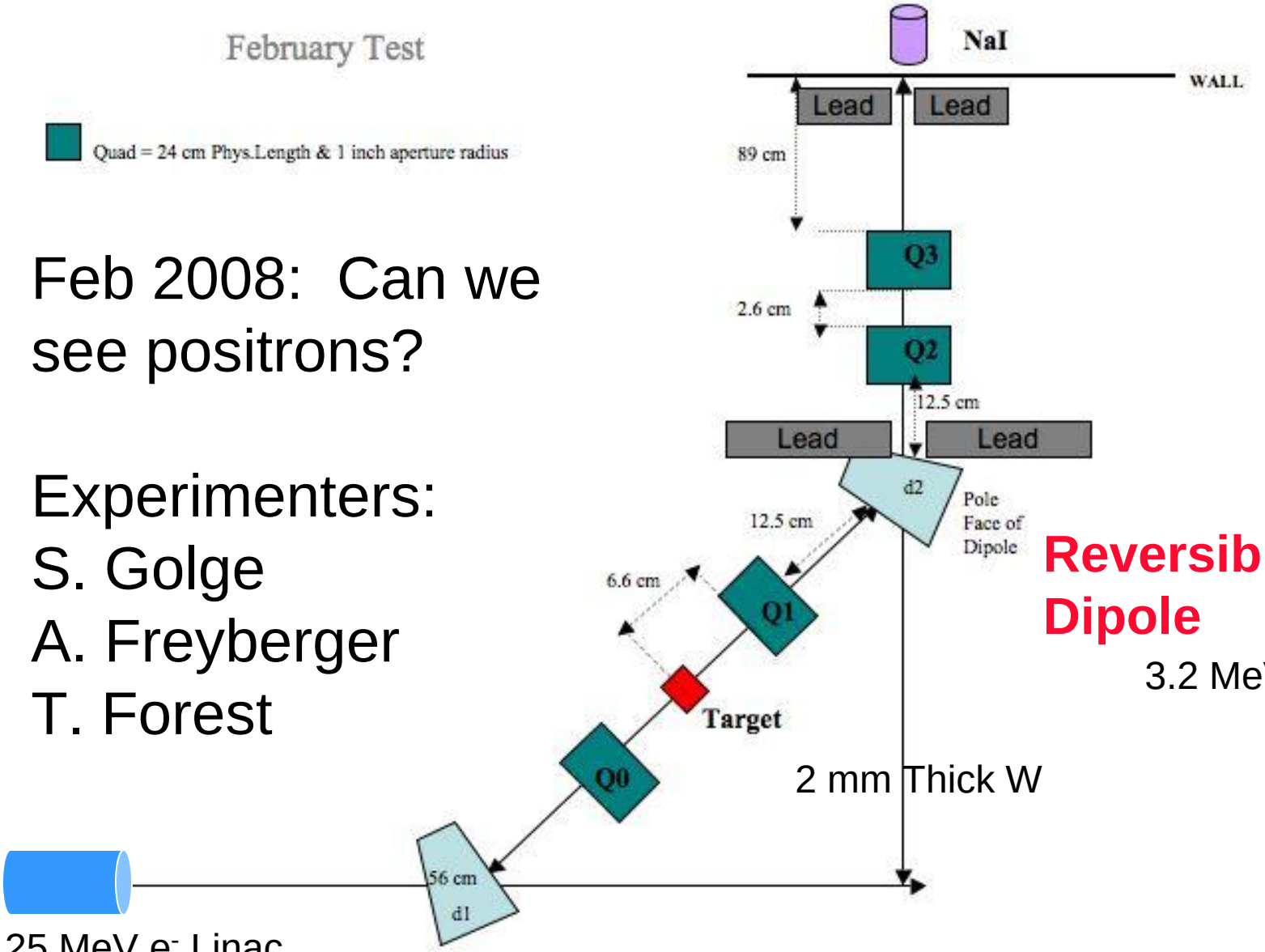

Reversible Dipole

3.2 MeV

2 mm Thick W

25 MeV e^- Linac

Beam parameters

Parameter	Value
Electron Beam Energy	10 MeV
Peak current	10 mA
Pulse width	100 ns
Rep Rate	300 Hz
Bend 2 Dipole	3.2 MeV
Spot size	FWHM ~ 8 mm in X and Y
Tungsten (W) foil	2 mm thick x 20 mm x 20 mm
Aluminum positron absorber	5 cm thick

NaI Detectors

NaI output pulse using 1 μC Co-60 Source

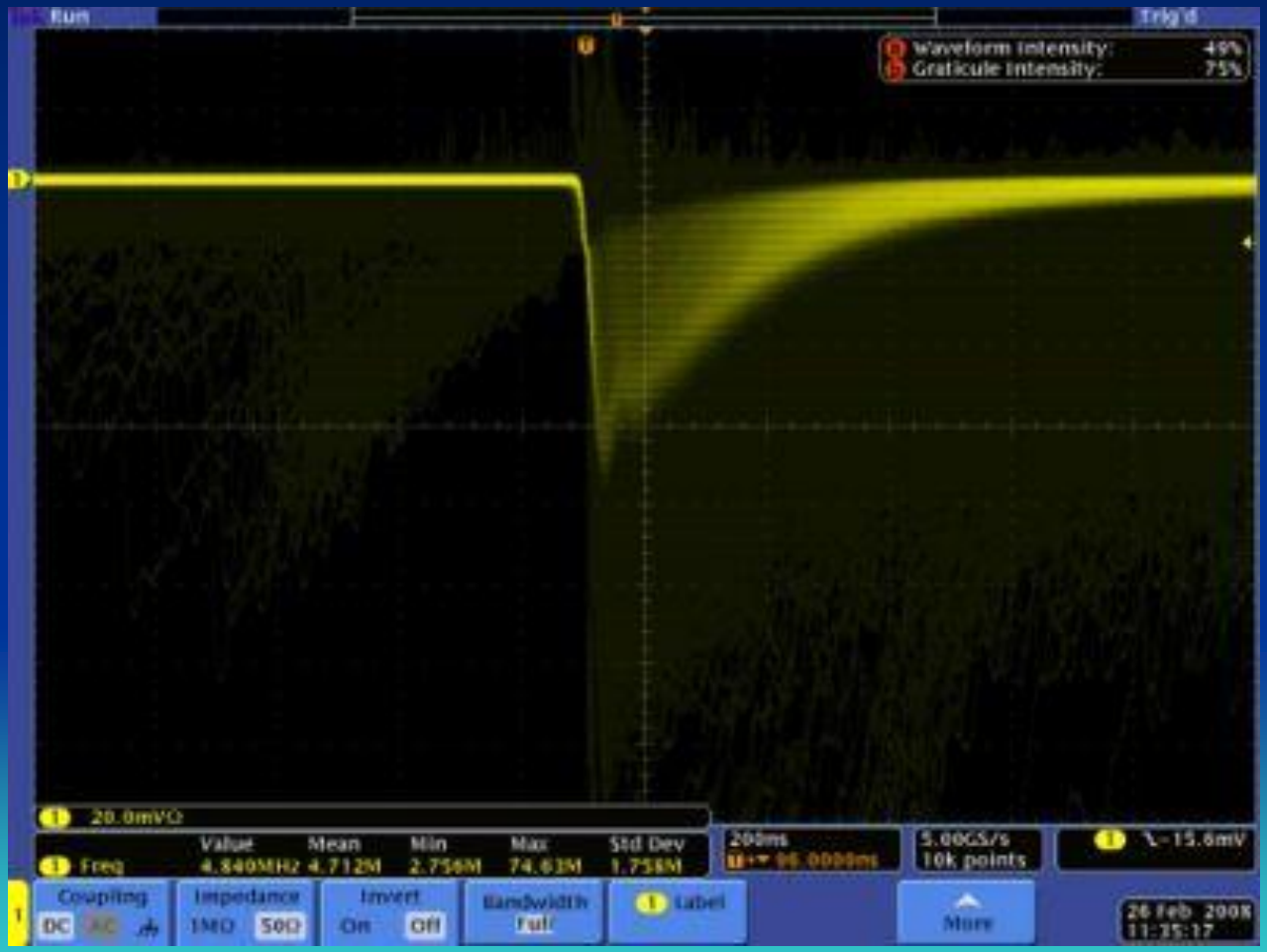

~ 400 ns signal pulse width

Set threshold to 30 mV
=> 0.45 MeV

NaI calibration

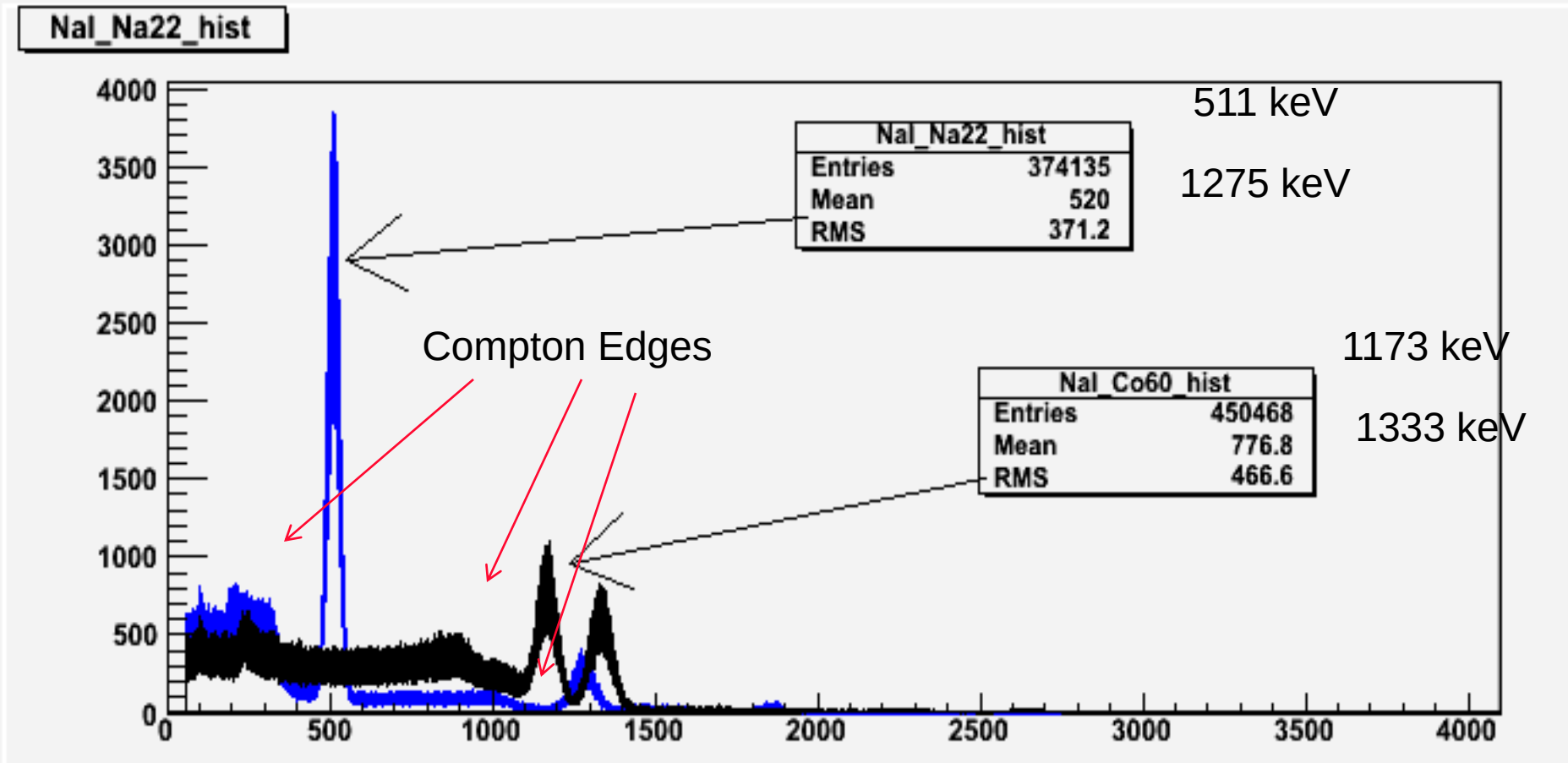

NaI pulse from e- beam

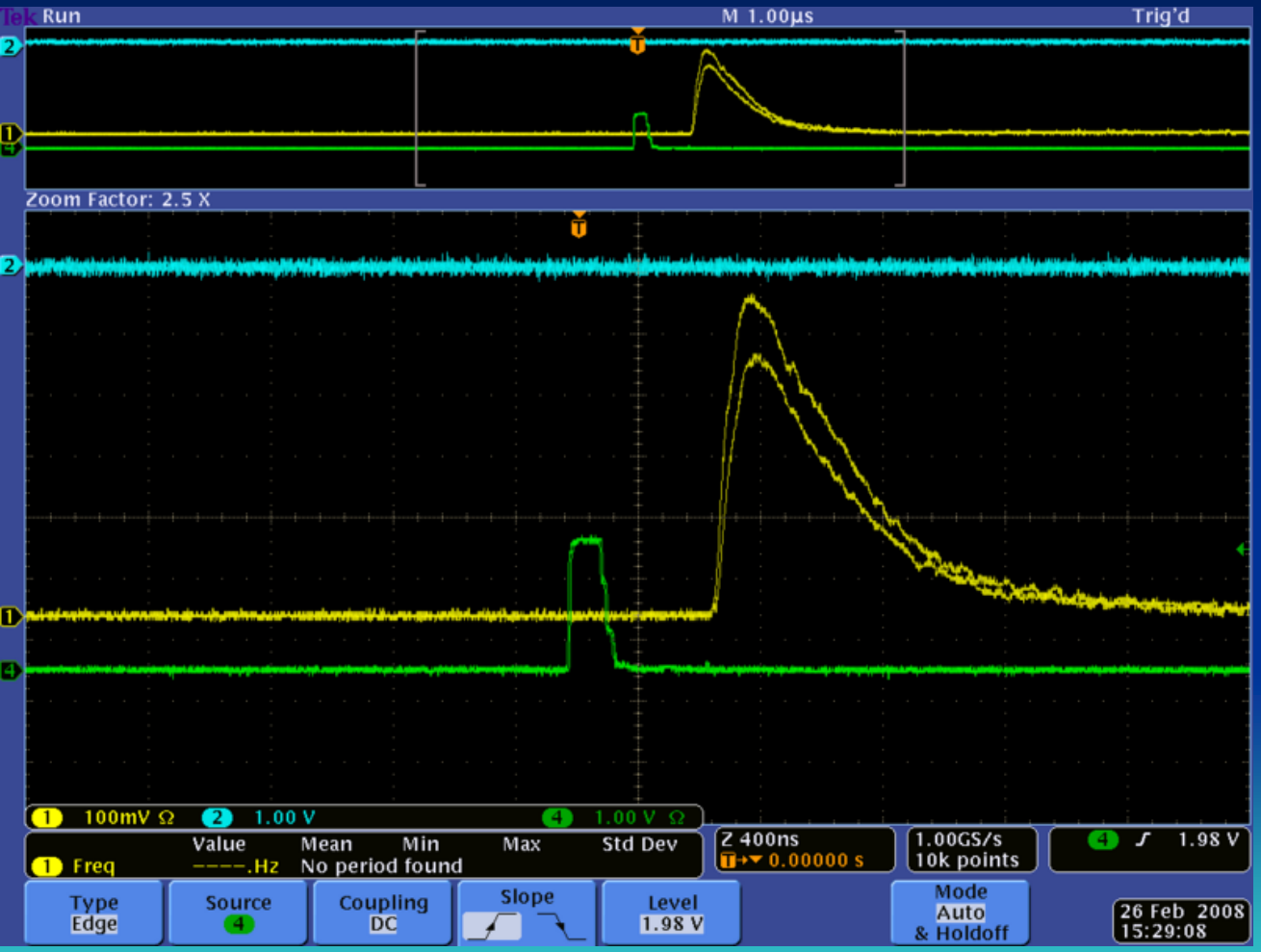

500 ns coincidence
Window using
2 NaI detecors
And Beam pulse gate

NaI amplified output

100 ns Beam pulse gate

Insert 2 NaI detectors
2” Aluminum positron absorber
4” retractable Al brick for background studies
look for gammas in coincidence

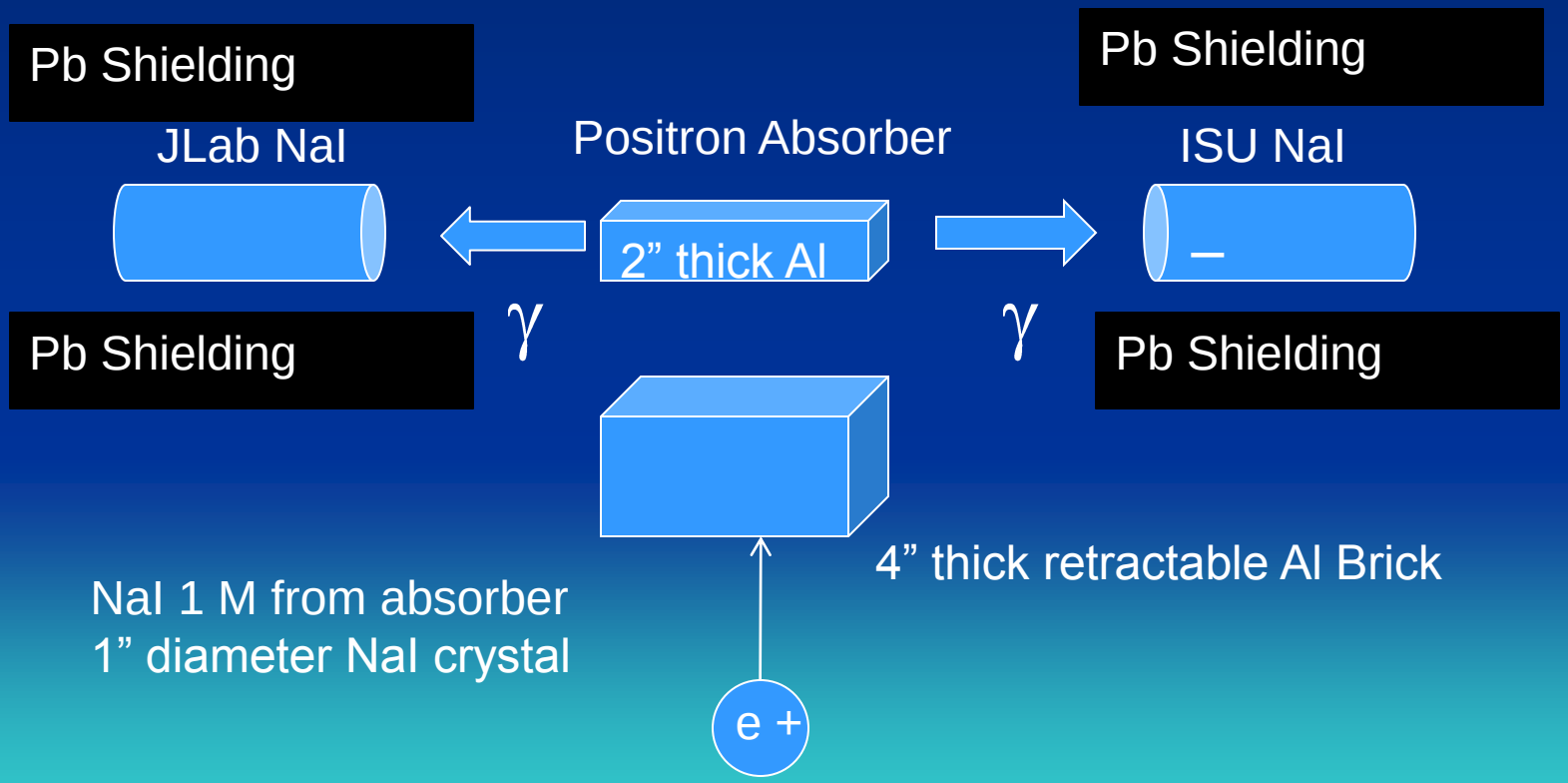

2/27/2008

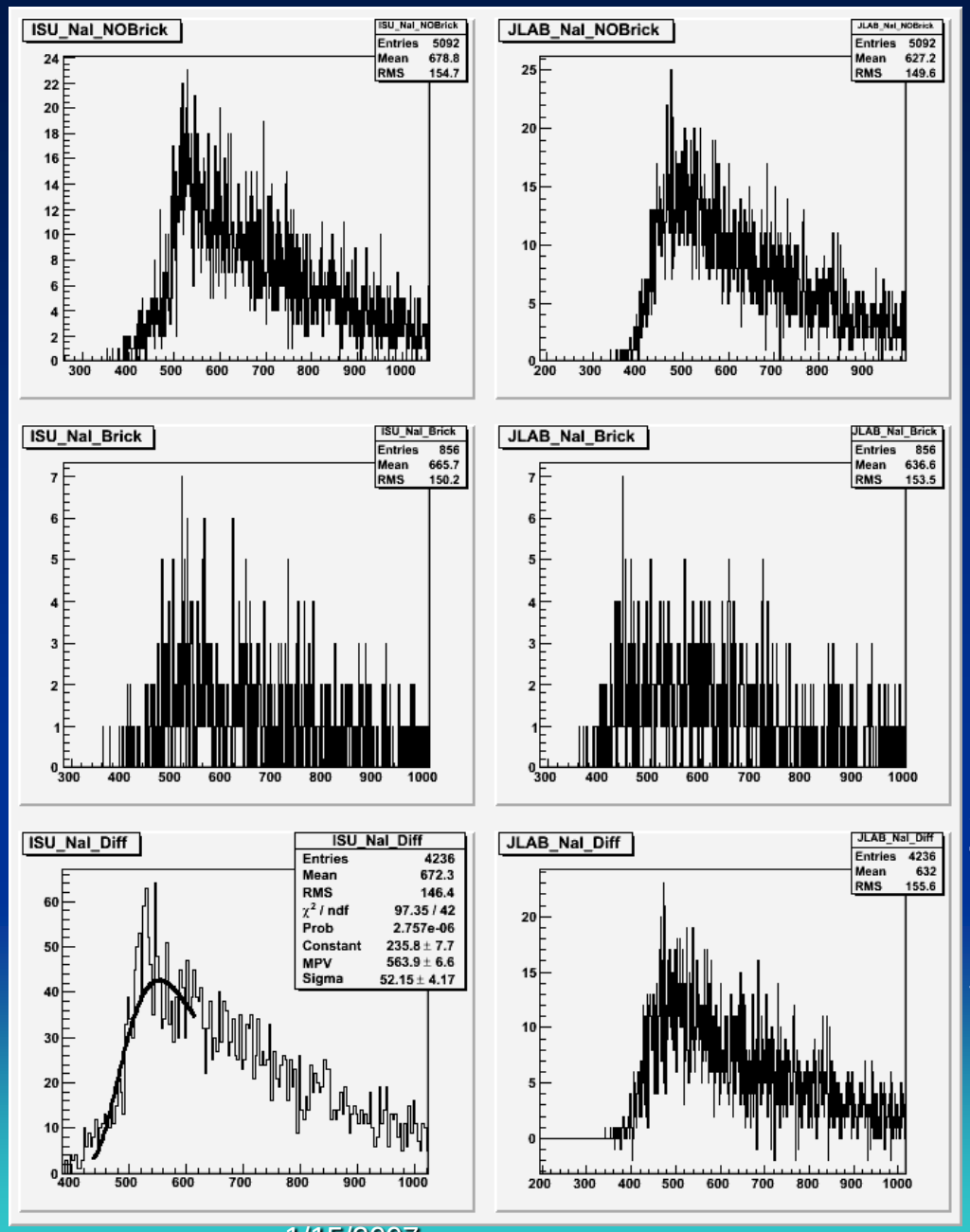

First attempt using 2 NaI detectors in coincidence.

250 counts/Min
backgrd 172 counts/min
Signal = 1 Hz

Brick in => Aluminum brick used to absorb positrons before converter

IAC beam line for 5/08 e+ test

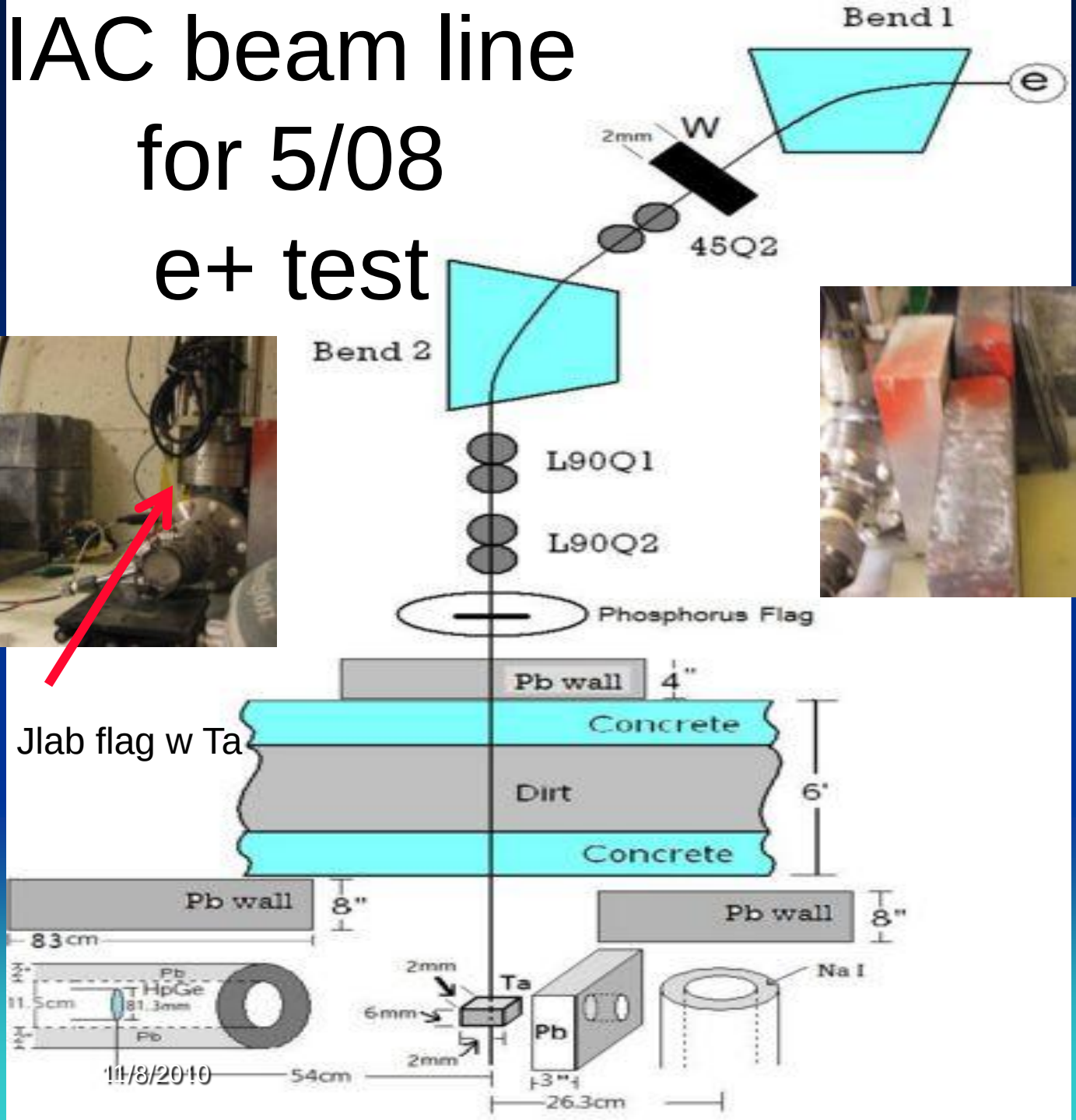

Jlab flag w Ta

Beam parameters

Parameter	Value
Electron Beam Energy	10 MeV
Peak current	40 mA
Pulse width	100 ns
Rep Rate	300 Hz
Bend 2 Dipole	3.2 MeV
Spot size at 2nd Dipole D2	FWHM ~ 2.5 mm in X and Y
Spot size at Phosphorous Target	~ 4mm diameter in X and Y
Tungsten (W) foil	2 mm thick x 20 mm x 20 mm
Tantalum foil	6 mm thick x 20 mm x 20 mm

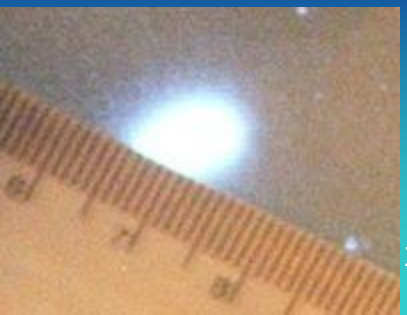

8 mm X M = 4 mm

M = 3.5/7.5 = image magnification

5/30/2008 Singles(no coinc)

Dipole tuned for Positrons

Dipole detuned (no Positrons)

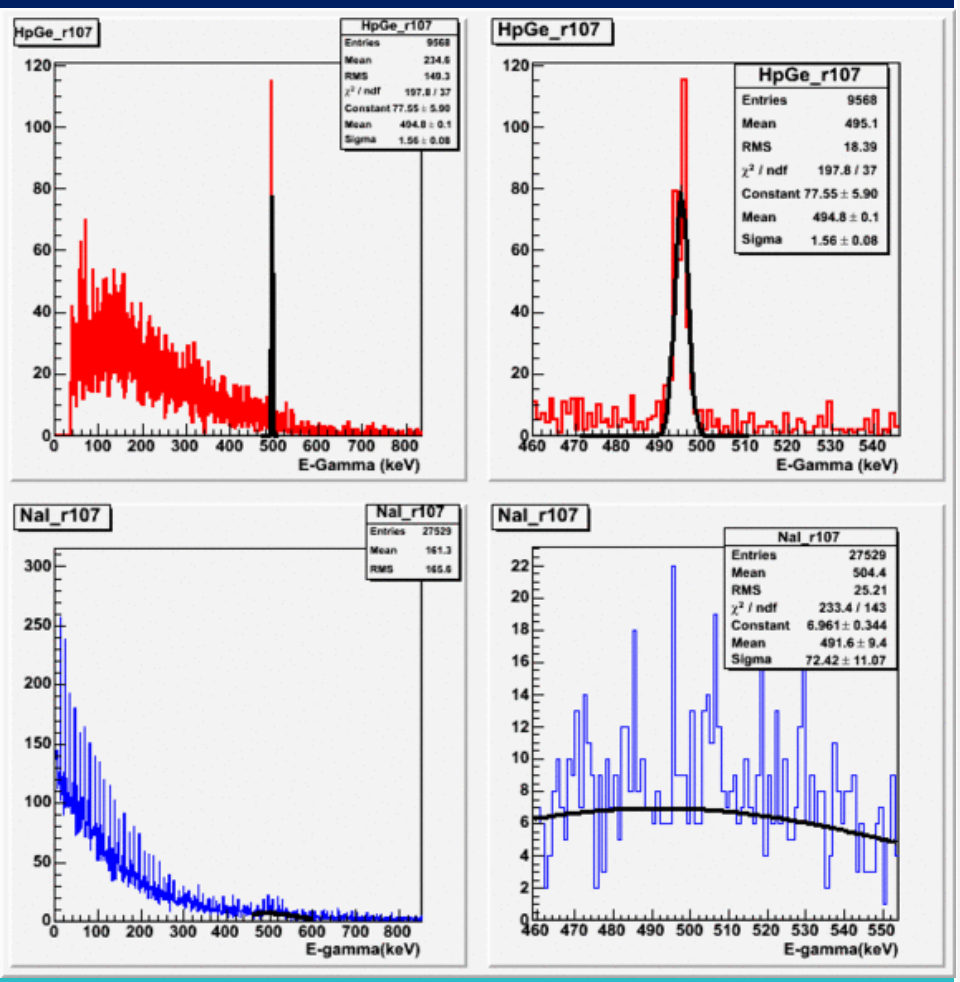

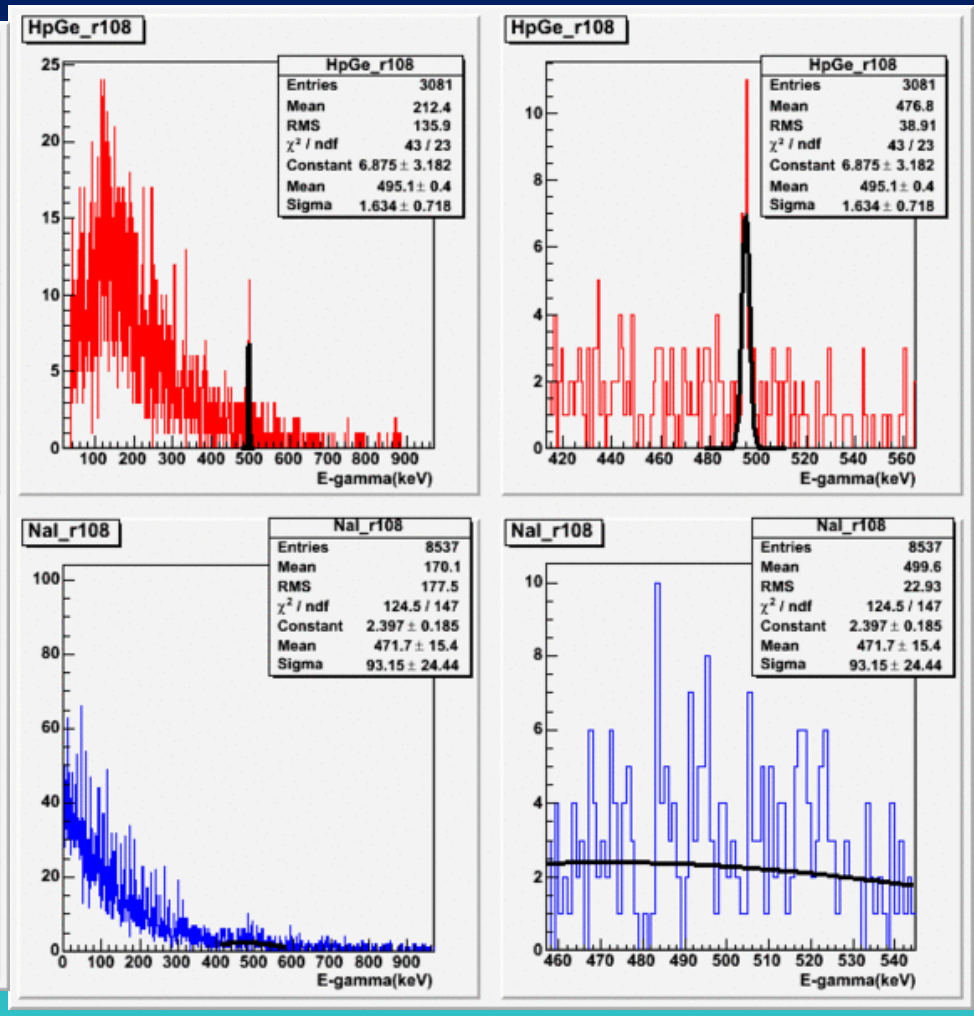

1 annihilation photon/10 μC e^- on 2 mm W target

5/30/2008

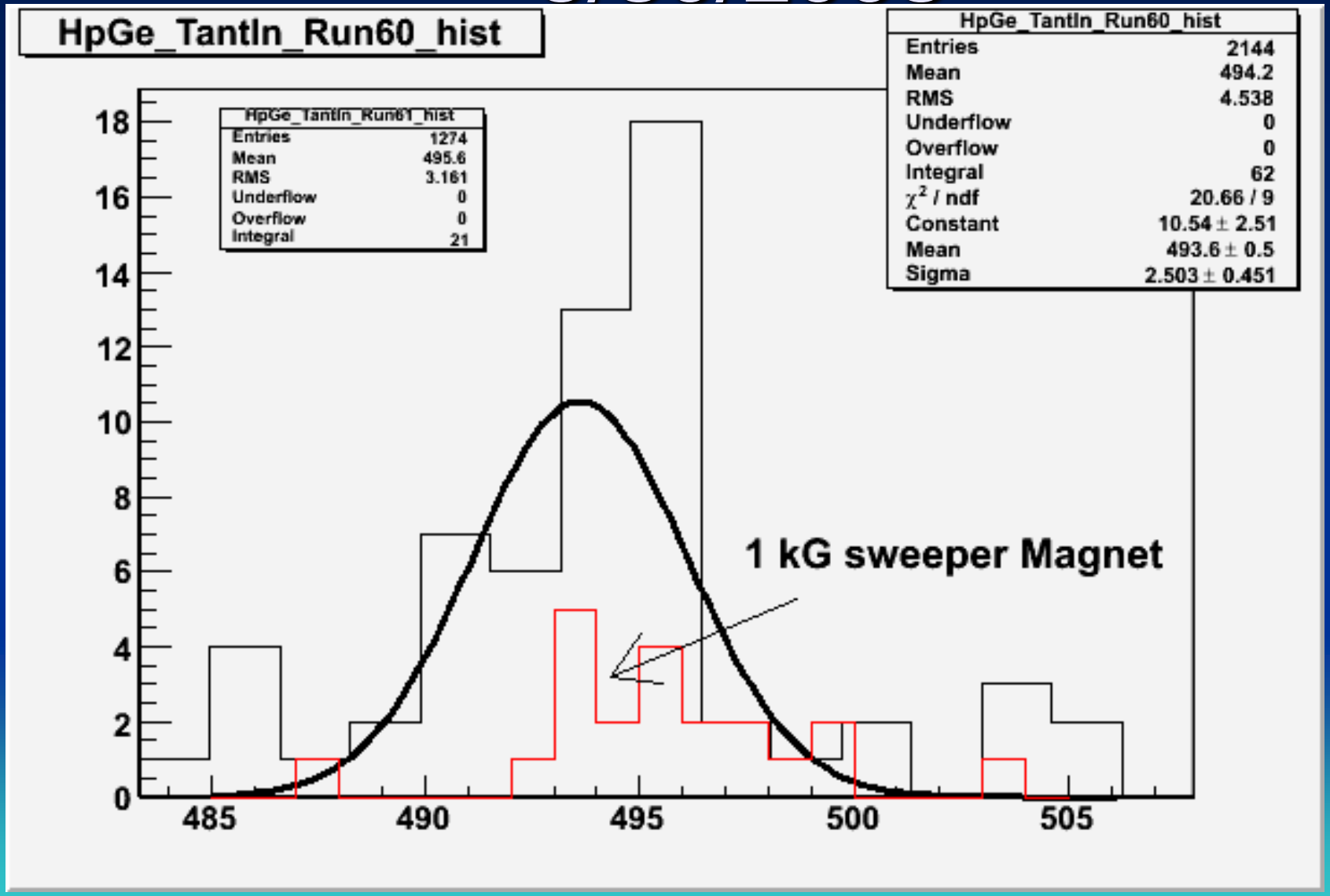
HpGe_TantIn_Run60_hist
HpGe_TantIn_Run61_hist
Entries 1274
Mean 495.6
RMS 3.161
Underflow 0
Overflow 0
Integral 21
HpGe_TantIn_Run60_hist
Entries 2144
Mean 494.2
RMS 4.538
Underflow 0
Overflow 0
Integral 62
χ² / ndf 20.66 / 9
Constant 10.54 ± 2.51
Mean 493.6 ± 0.5
Sigma 2.503 ± 0.451
1 kG sweeper Magnet
0
2
4
6
8
10
12
14
16
18
485
490
495
500
505

Experience Summary

- Easily observe positron annihilation using either NaI Coinc measurements or HpGe detector singles
- NaI has x3 faster response time than HpGe; NaI rates up to 2.5 MHz without pileup
- Observed 90 e+ annihilation photon candidates/mC

Ideas for a Positron Counter P1

Current JLab source

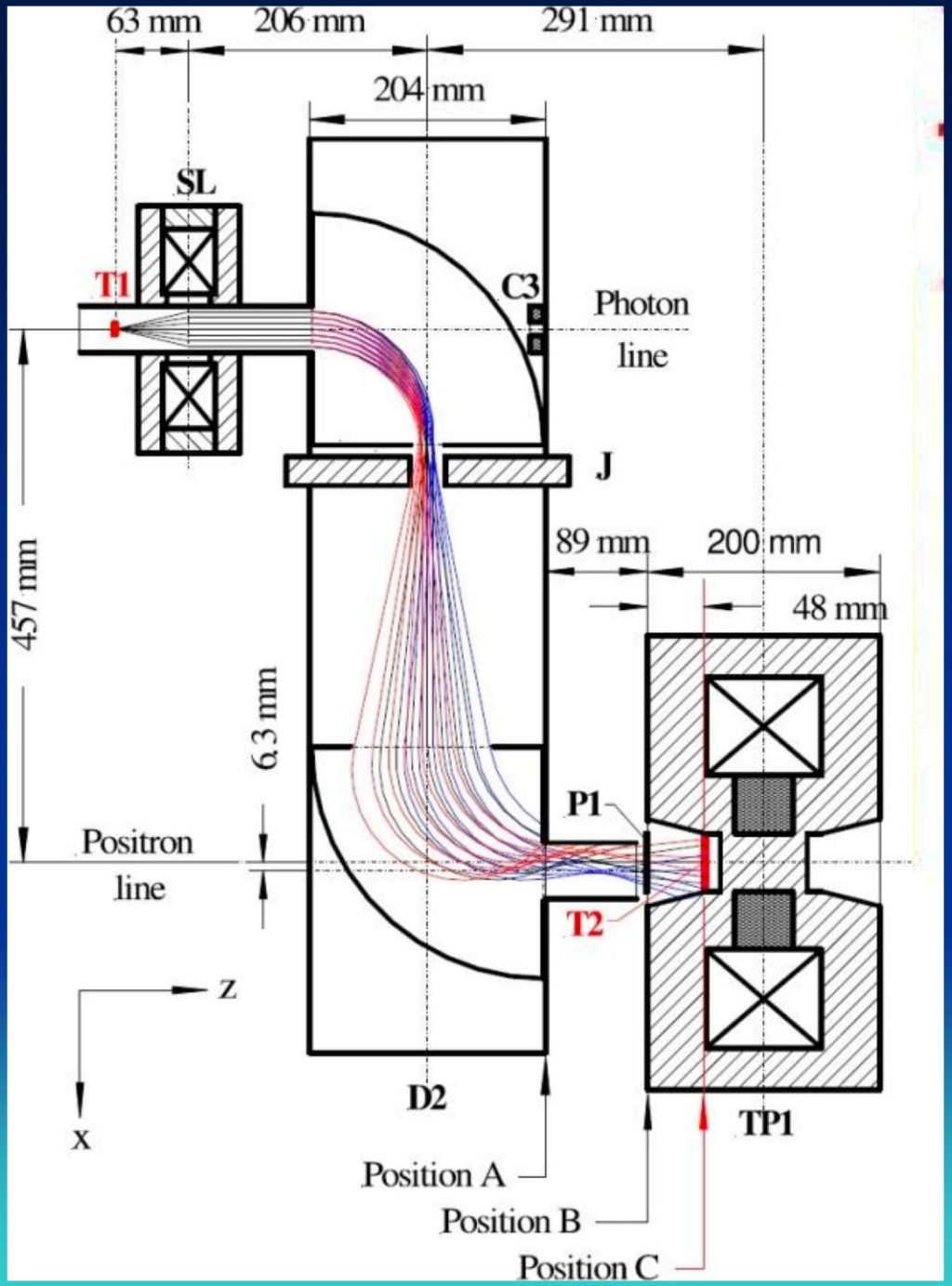

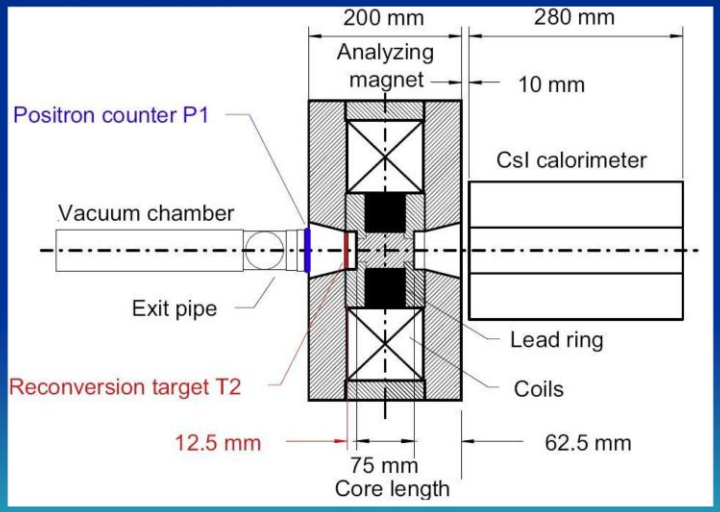

Positron Counter P1

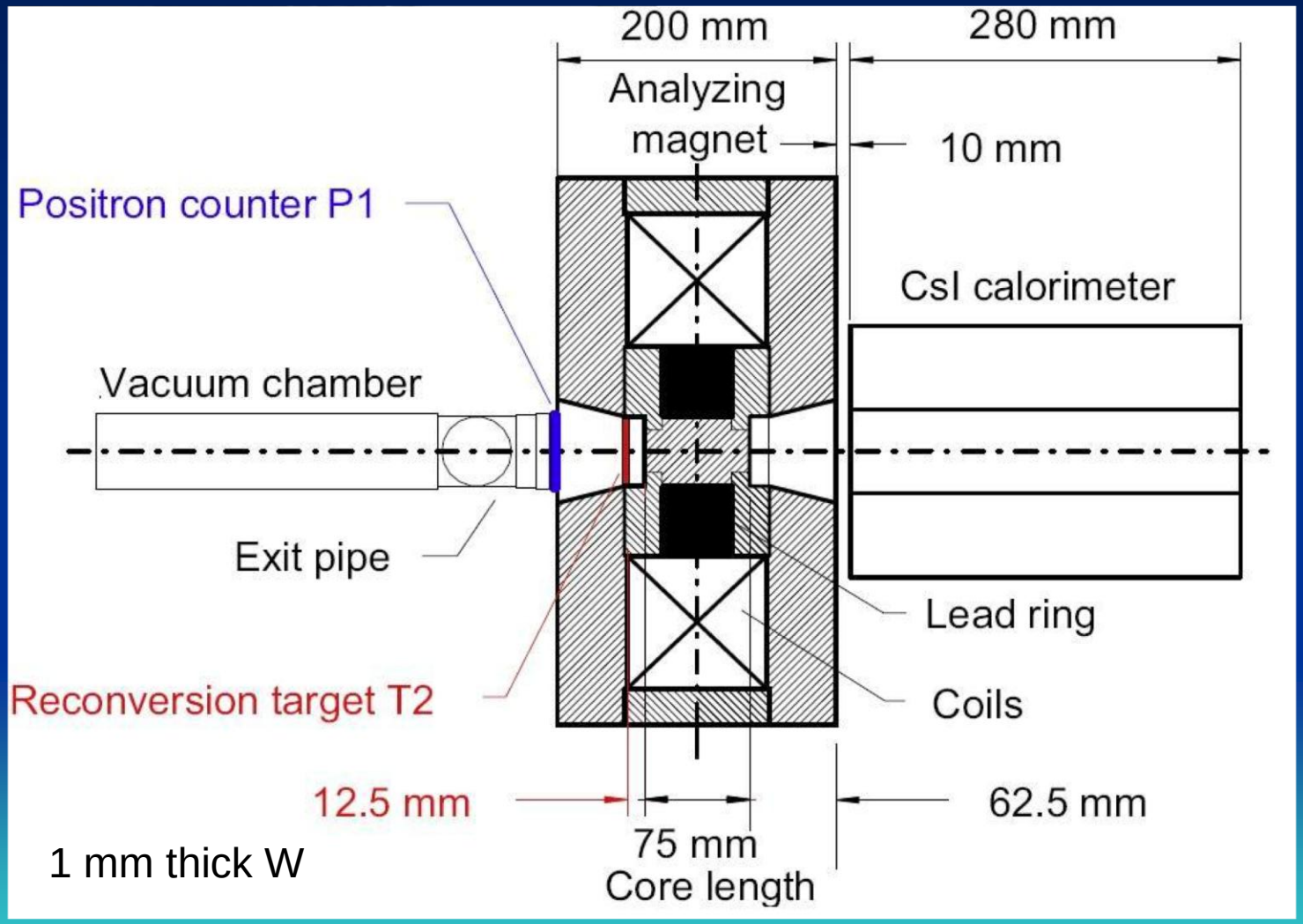

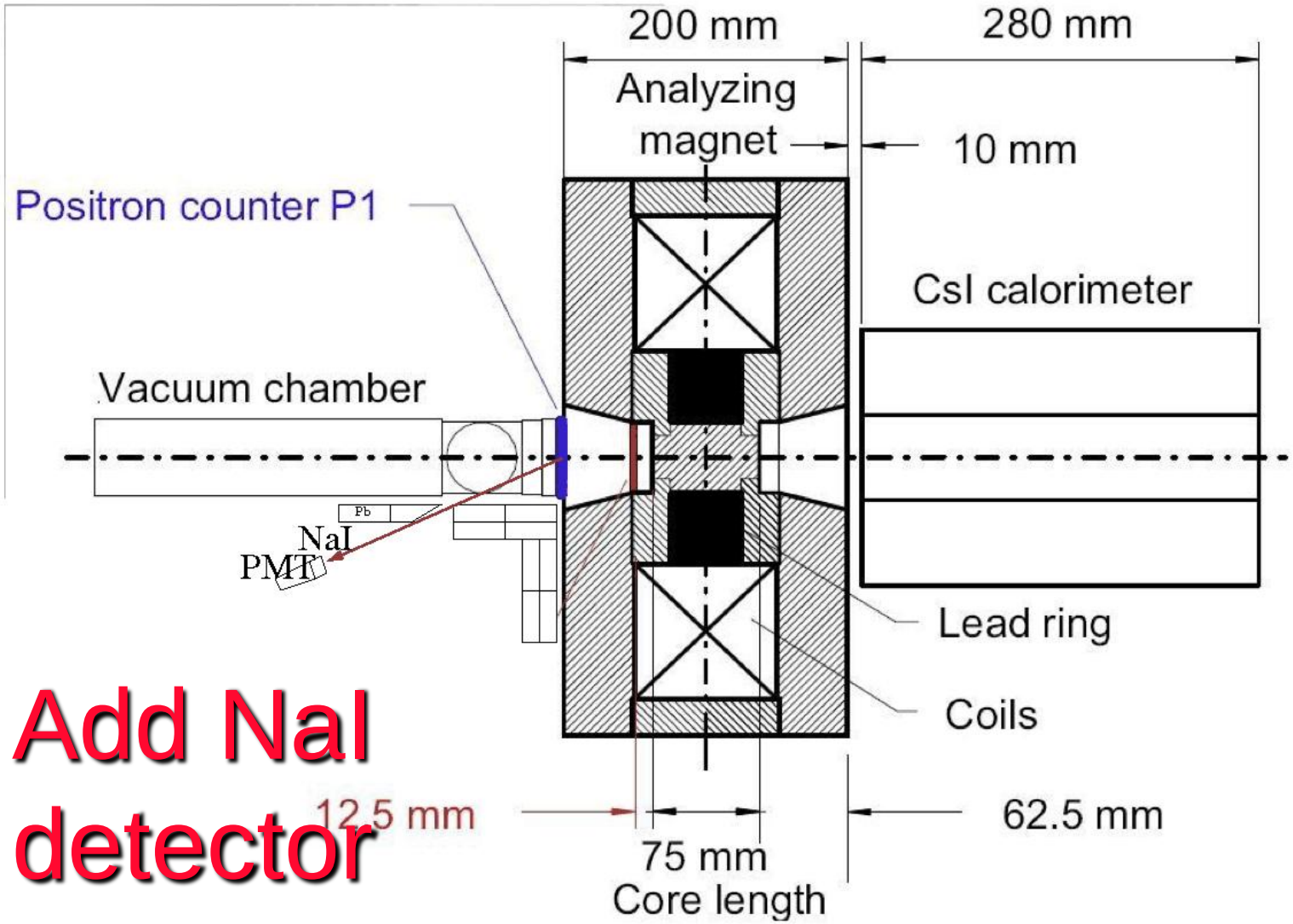

Add NaI detector

Add another NaI detector and a target ladder with a solid target (no hole)

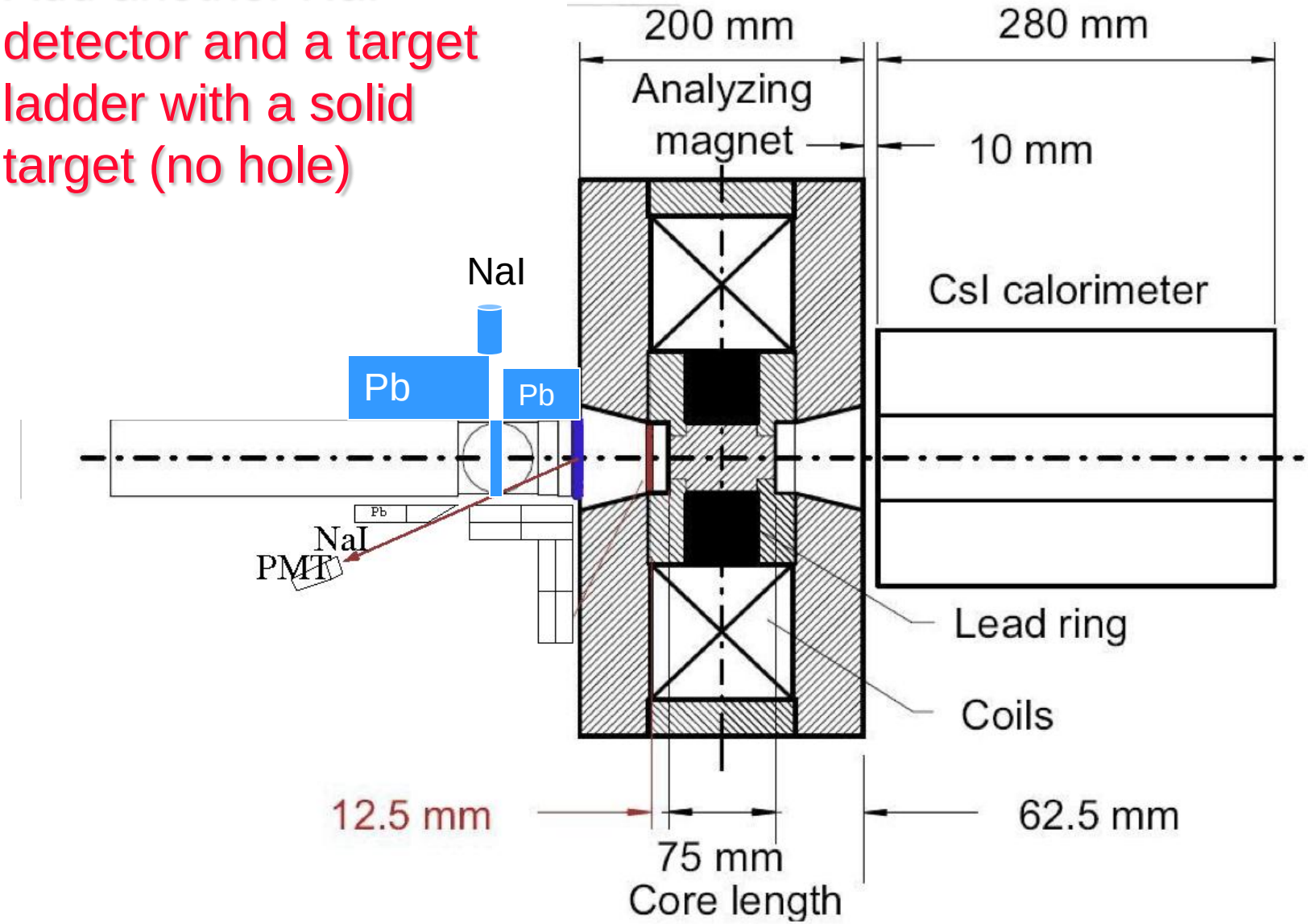

G4 Rate Estimate

- Threw 100k, 3 MeV e+ at a 2 cm thick Ta foils
- 76k conversion events were seen
- 100 events were positron in flight ($E\gamma$ > 1. MeV and at 35 degrees)
- 1.2k were 0.511 gammas at 90 degrees
- A 2cm diameter NaI located 20 cm from target ~0.01 sr
- Monitor rate (< 1 photons/100k e+)
- Invasive e+ measurement (<120γ/100ke+)

Conclusions/Suggestions

- NaI coinc or HpGe singles can be used to monitor positron beam
- Target Ladder; 2 foils, one with hole
- Use 0.511s for beam monitor
- Use > 1 MeV gammas for polarimeter normalization

In-Flight Positron Anihilation X-sect

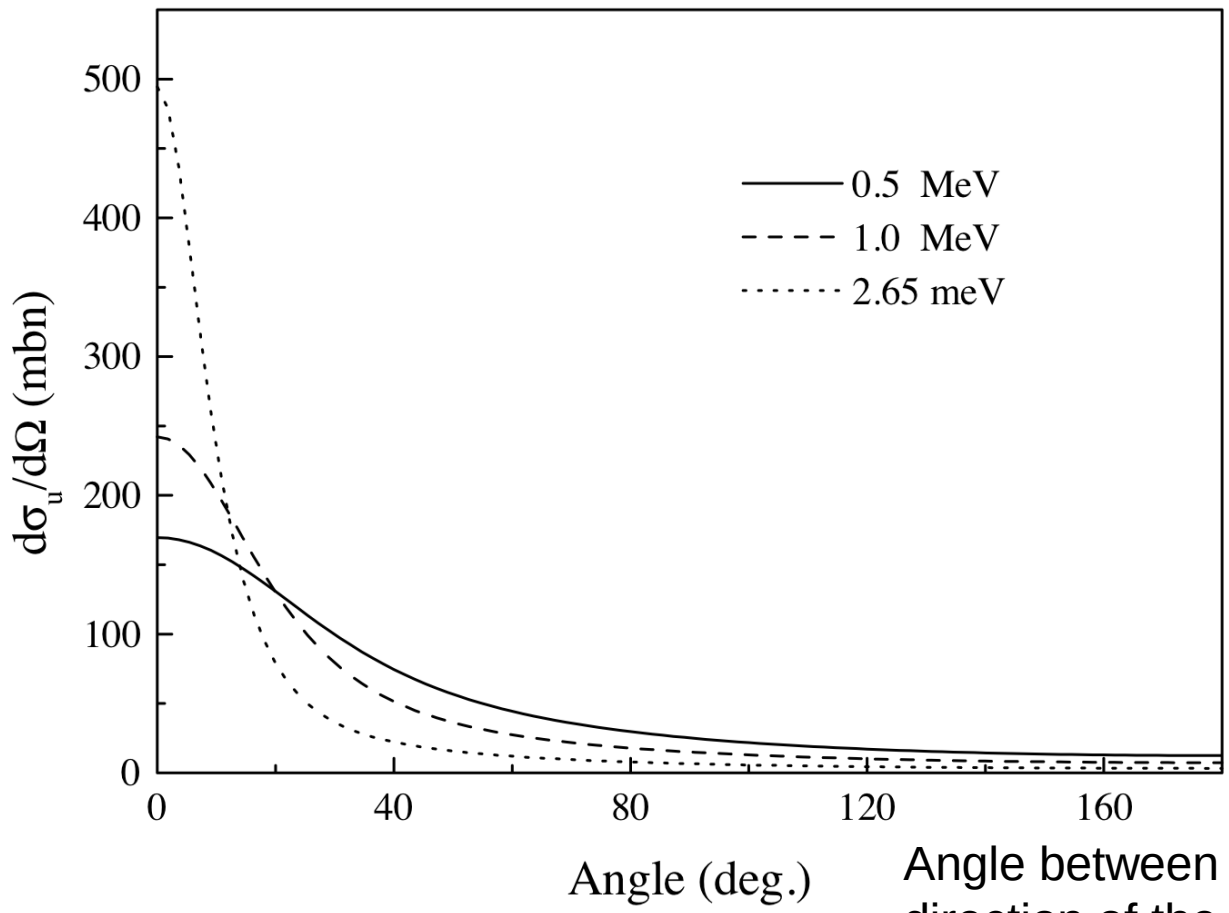

Angle between the first photon and the direction of the incoming positron

Heitler,"The Quantum Theory of Radiation", Oxford at the Clarendon Press, 1954

Beam spot FWHM ~ 2.5 cm at zero degree port of last dipole