REVISIONS				
ZONE	REV.	DESCRIPTION	DATE	APPROVED
	A	REVISED PER ECO E0482	01/27/98	

NOTES:

1. ITEMS 2,3 AND 14 ARE NOT USED ON ASSEMBLY SHOWN. THESE ITEMS ARE TO BE USED IF THE CAPACITOR SHOWN IS CHANGED OUT FOR HEC PART NO. CP510, 10 uF 120KVDC

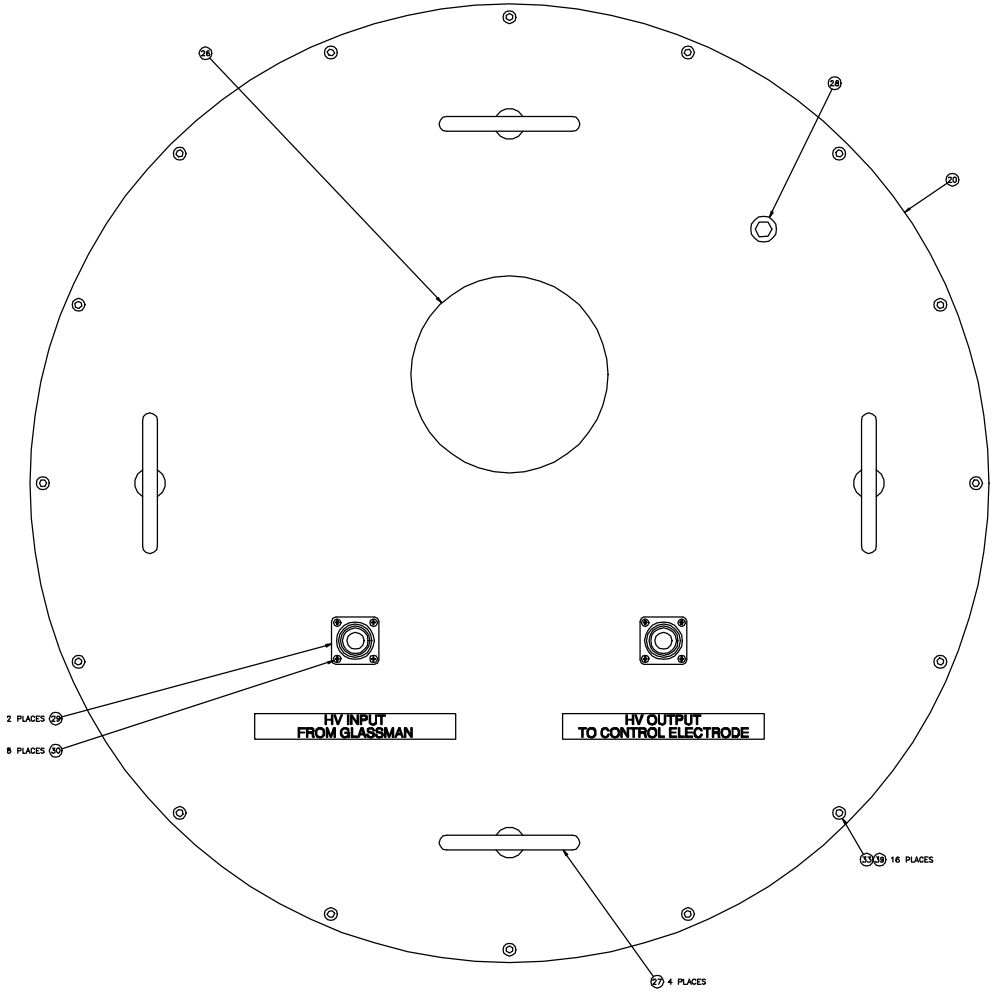

TOP VIEW

QTY	REV DETAIL	NO.	PART OR IDENTIFYING NO.	MANUFACTURER OR DESCRIPTION	MATERIAL SPECIFICATION	CODE STOCK NO
4		48		MODIFIED BANANA PLUG	VARIOUS	
2		47		RING LUG	VARIOUS	
AS REQD		46		0.125 O.D. TUBING	COPPER	
2		45	AMPHENOL AN3057-10	CONNECTOR,	VARIOUS	
2		44		WASHER, 0.500 I.D. X 0.937 O.D. X 0.080 THK	BRASS	
2		43		CONNECTOR,	STEEL	
AS REQD		42		1/8" THK GASKET	RUBBER	
2		41	PARKER 2-212	O-RING, 7/8" I.D X 1 1/8" I.D. X 1/8" THK	VITON	5330-14160
2		40	PARKER 2-115	O-RING, 11/16" I.D X 7/8" O.D. X 3/32" THK	VITON	5330-14115
16		39	—	1/4" LOCKWASHER	SS	5310-73000
85 IN		38	VANGUARD 7250-11	LID GASKET		—
16		37	—	1/4-20 UNC-2A X 1-1/2" LONG FILLISTER HEAD SCREW	NYLON	5305-41180
28		36	—	1/4-20 UNC-2A X 1" LONG FILLISTER HEAD SCREW	NYLON	5305-41170
4		35	—	1/4-20 UNC-2A X 3/4" LONG FILLISTER HEAD SCREW	NYLON	5305-41160
2		34	—	1/4-20 UNC-2A X 1/2" LONG PAN HEAD SCREW	SS	
16		33	—	1/4-20 UNC-2A X 1/2" LONG SOCKET HEAD CAP SCREW	SS	5305-40220
4		32	—	#10-32 UNF-2A X 3/4" LONG SOCKET HEAD CAP SCREW	SS	5305-40130
7		31	—	#10-32 UNF-2A X 1/2" LONG SOCKET HEAD CAP SCREW	SS	5305-40110
8		30	—	#6-32 UNC-2A X 3/8" LONG PHILLIPS PAN HEAD SCREW	SS	5305-60080
2		29	GLASSMAN XXXXXXX	MS STYLE WALL MOUNT CONNECTOR	VARIOUS	—
1		28	PARKER HF-SS 1/2"	PLUG, HEX HEAD PIPE, 1/2"	SS	4732-25040
4		27	ARMSTRONG 89-025	EYE BOLT, 1/2", FORGED STEEL W/SHOULDER	VARIOUS	3970-90120
1		26		HOUSING VENT	VARIOUS	—
2		25		FEED THROUGH FITTING	ALUMINUM	
1		24		200 KV DIODE, POTTED ASSY/W CAPACITORS	VARIOUS	—
6		23	EBG 5SP52	RESISTOR, 50 OHM, 10W, 15KV	VARIOUS	—
22		22	EBG 35X38N	RESISTOR, 20M OHM, 4.6W, 12KV	VARIOUS	—
1		21	CONDENSER PROD KNOP503-100K	CAPACITOR, .05uF, 100000 VDCW	VARIOUS	—
1		20	TJNAF DWG. NO. C0462E01 SH. 11	OUTPUT MODULE HOUSING LID	CRS	—
1		19	TJNAF DWG. NO. C0462E01 SH. 10	OUTPUT MODULE HOUSING	CRS	—
12		18	TJNAF DWG. NO. C0462E01 SH. 9	LARGE RESISTOR RING	0.50 O.D. COPPER TUBING	—
9		17	TJNAF DWG NO. C0462E01 SH. 9	SMALL RESISTOR RING	0.25 O.D. COPPER TUBING	—
2		16	TJNAF DWG. NO. C0462E01 SH. 9	FEED THROUGH CORONA RING	6061-T6 ALUMINUM	—
1		15	TJNAF DWG. NO. C0462E01 SH. 9	BOTTOM PLATE OUTER RING	6061-T6 ALUMINUM	—
1		14	TJNAF DWG. NO. C0462E01 SH. 8	CAPACITOR CORONA RING	COPPER TUBING	—
1		13	TJNAF DWG NO. C0462E01 SH. 6	BOTTOM PLATE	6061-T6 ALUMINUM	—
1		12	TJNAF DWG. NO. C0462E01 SH. 7	TOP PLATE	6061-T6 ALUMINUM	—
4		11	TJNAF DWG. NO. C0462E01 SH. 6	INPUT RESISTOR CHAIN SUPPORT RAIL	POLYCARBONATE	—
1		10	TJNAF DWG. NO. C0462E01 SH. 6	CAPACITOR CONNECTION PLATE	6061-T6 ALUMINUM	—
2		9	TJNAF DWG NO. C0462E01 SH. 6	INPUT/OUTPUT CABLE FEED THROUGH	POLYCARBONATE	—
4		8	TJNAF DWG. NO. C0462E01 SH. 6	OUTPUT RESISTOR CHAIN SUPPORT RAIL	POLYCARBONATE	—
4		7	TJNAF DWG. NO. C0462E01 SH. 5	TOP PLATE SUPPORT POST	6061-T6 ALUMINUM	—
1		6	TJNAF DWG NO. C0462E01 SH. 5	RESISTOR/OUTPUT FEED THROUGH CONNECTOR PLATE	6061-T6 ALUMINUM	—
1		5	TJNAF DWG. NO. C0462E01 SH. 5	DIODE/RESISTOR CHAIN CONNECTOR PLATE	6061-T6 ALUMINUM	—
1		4	TJNAF DWG. NO. C0462E01 SH. 5	INPUT FEED THROUGH/DIODE CONNECTOR PLATE	6061-T6 ALUMINUM	—
1		3	TJNAF DWG. NO. C0462E01 SH. 5	CAPACITOR SUPPORT PLATE	POLYCARBONATE	—
4		2	TJNAF DWG NO. C0462E01 SH. 5	CAPACITOR SUPPORT BLOCK	POLYCARBONATE	—
4		1	TJNAF DWG. NO. C0462E01 SH. 5	BOTTOM PLATE SUPPORT RAIL	POLYCARBONATE	—

PARTS LIST

DO NOT SCALE DRAWING

DWG NO. VAC\CONT\C0462\C0462E1.DWG

	APPROVALS	DATE
DRAWN	D. WILLIAMS	11/17/97
CHECKED	D. COX	12/4/97
ENGINEERING	H. ARETI	12/4/97
APPROVED	G. GARZA	12/4/97

Thomas Jefferson National Accelerator Facility
OPERATED BY SOUTHEASTERN UNIVERSITIES RESEARCH ASSOCIATION, INC.
UNDER DOENERGY DEPARTMENT OF ENERGY

VARIOUS

VARIOUS

TITLE CONTROLS
INJECTOR HIGH VOLTAGE
OUTPUT MODULE
ASSEMBLY AND FABRICATION DETAILS

SIZE E — DWG NO. C0462E01 — REV A

SCALE 1" = 1" — SHEET 1 OF 11

C0462E01

REVISIONS

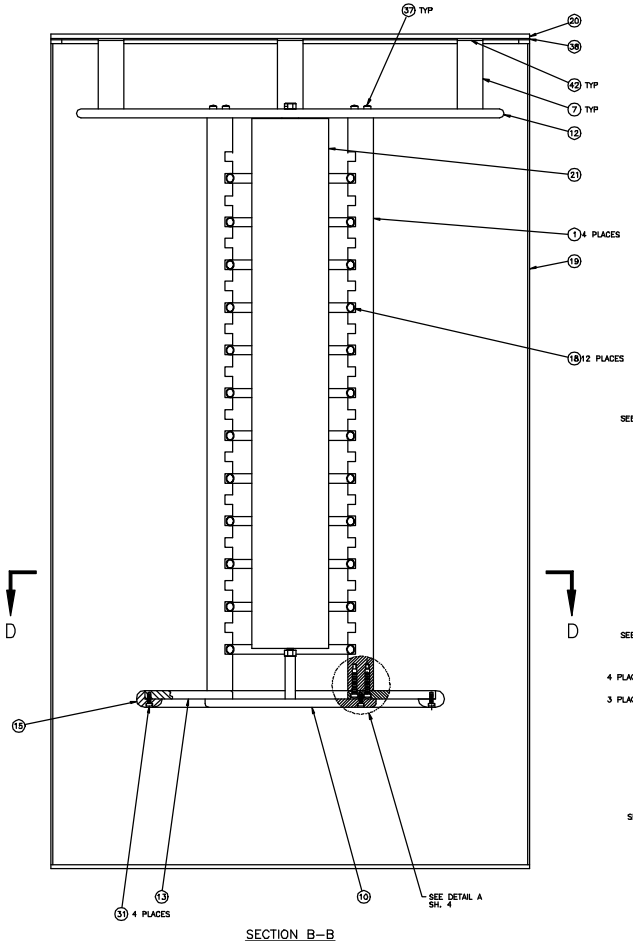

SECTION B–B

ITEMS ON EXTERIOR OF HOUSING LID
OMITTED IN THIS VIEW
CROSS HATCHING OMITTED FROM
NUMEROUS ITEMS FOR CLARITY

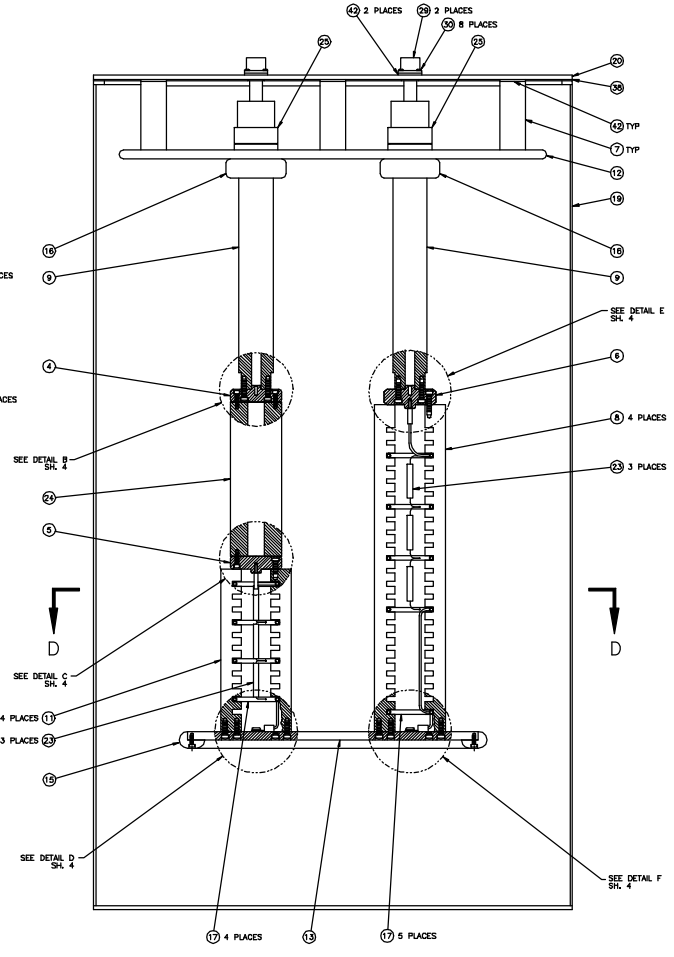

SECTION C–C

ITEMS ON EXTERIOR OF HOUSING LID
OMITTED IN THIS VIEW
CROSS HATCHING OMITTED FROM
NUMEROUS ITEMS FOR CLARITY

DO NOT SCALE DRAWING

HIGH VOLTAGE OUTPUT MODULE

C0462E01

A

1/2"=1"

SHEET 3 OF 11

DWG. NO. C0462E01

SHT. 3 REV. A

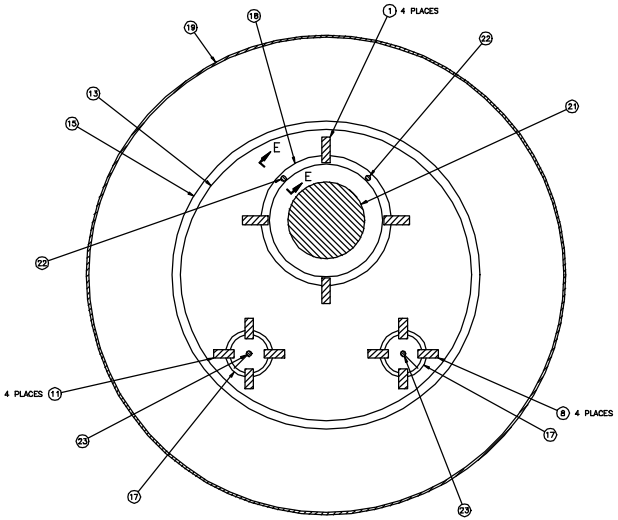

SECTION D–D
SCALE: 1/2"=1"

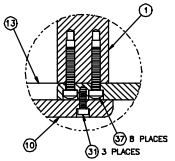

DETAIL A
TYPICAL FOR 3 OF 4 CONNECTIONS BETWEEM ITEM 1,10 AND 13 FOURTH CONNECTION DOES NOT INCLUDE ITEM 31.

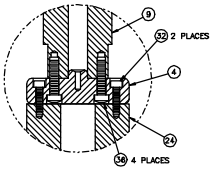

DETAIL B

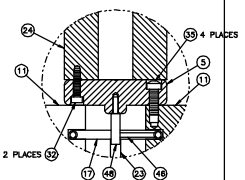

DETAIL C
ITEM 32 IS SHOWN ROTATED 45° OUT OF TRUE POSITION ITEM 46 IS SOLDERED TO ITEMS 17 AND 48

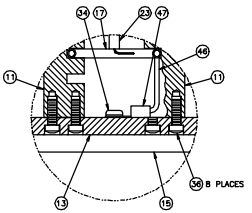

DETAIL D
ITEM 46 IS SOLDERED TO ITEMS 17 AND 47

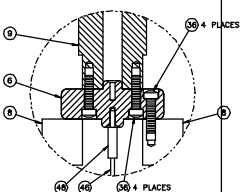

DETAIL E
ITEM 36 FASTENING ITEMS 6 AND 8 IS SHOWN 45° OUT OF TRUE POSITION ITEM 46 IS SOLDERED TO ITEM 48

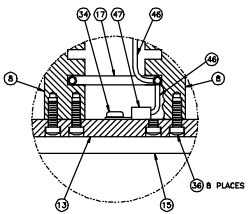

DETAIL F
ITEM 46 IS SOLDERED TO ITEMS 17 AND 47

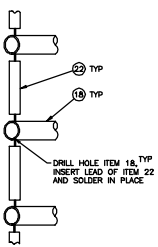

SECTION E–E

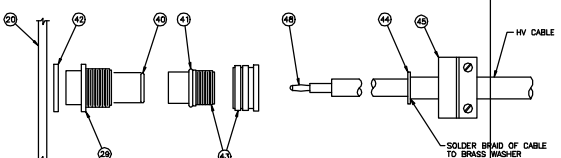

DETAIL G
INPUT AND OUTPUT CABLE/ CONNECTOR ASSEMBLY

DO NOT SCALE DRAWING	HIGH VOLTAGE OUTPUT MODULE	
	SIZE E	C0462E01 REV A
	SCALE 1"=1"	SHEET 4 OF 11

THIS DRAWING IS PROPRIETARY TO CONSOLIDATED ENGINEERING LABORATORIES

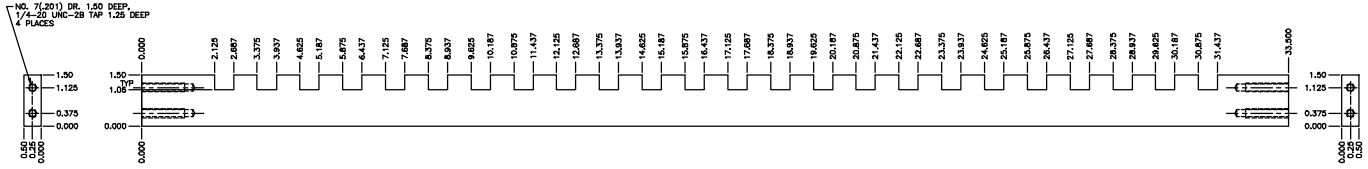

ITEM 1

MATERIAL: POLYCARBONATE

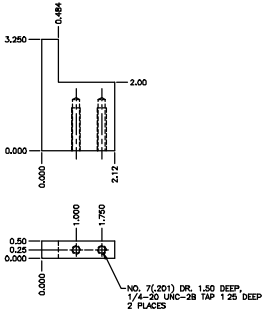

ITEM 2

MATERIAL: POLYCARBONATE

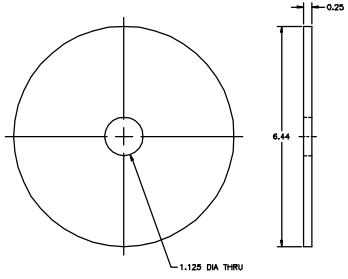

ITEM 3

MATERIAL: POLYCARBONATE

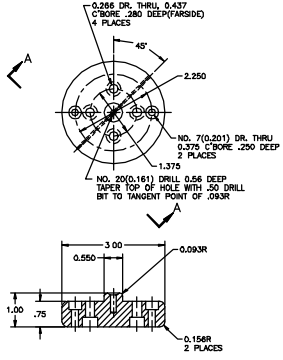

ITEM 4

MATERIAL: 6061-T6 ALUMINUM

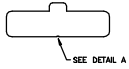

VIEW A-A

DETAIL A

SCALE - 10:1

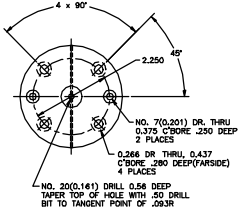

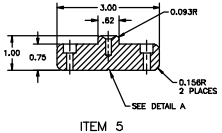

ITEM 5

MATERIAL: 6061-T6 ALUMINUM

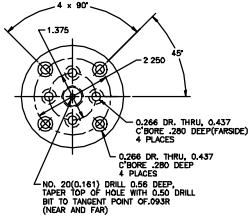

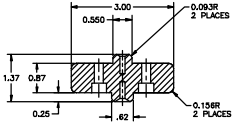

ITEM 6

MATERIAL: 6061-T6 ALUMINUM

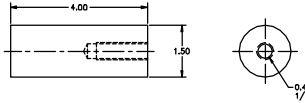

ITEM 7

MATERIAL: 6061-T6 ALUMINUM

DO NOT SCALE DRAWING	TOL ± TOL MIN ANY VALUE FRACTIONS ± 1/64 DECIMALS ± .005 ANGLES ± 1/2°	MATERIAL ± 1/64	DATE JAN 3 '01 JAN 3 '01	HIGH VOLTAGE OUTPUT MODULE DWG. NO. C0462E01 REV. A SCALE 1"=1" FILE NO. C:\DATA\C0462E01\C0462E01.DWG SHEET 5 OF 11

DWG. NO. C0462E01 REV. A

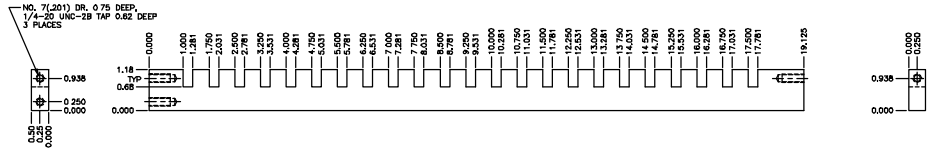

ITEM 8

MATERIAL: POLYCARBONATE

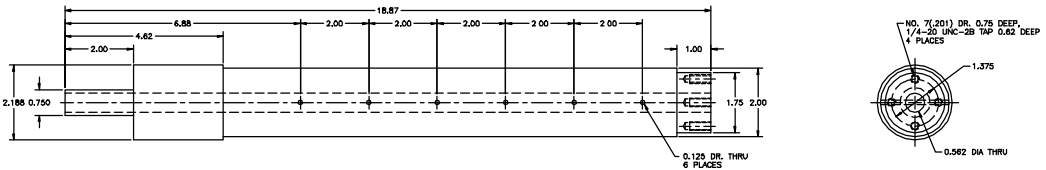

ITEM 9

MATERIAL: POLYCARBONATE

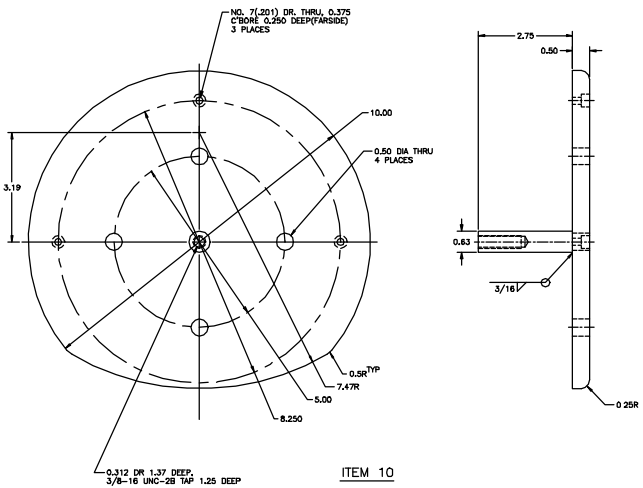

ITEM 10

MATERIAL: 6061-T6 ALUMINUM

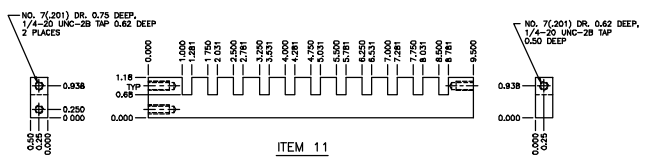

ITEM 11

MATERIAL: POLYCARBONATE

DO NOT SCALE DRAWING		HIGH VOLTAGE OUTPUT MODULE	
		E	C0462E01	A
		SCALE 1"=1"	SHEET 6 OF 11

SYSTEM NO. C0462E01 SHT. 6 REV. A

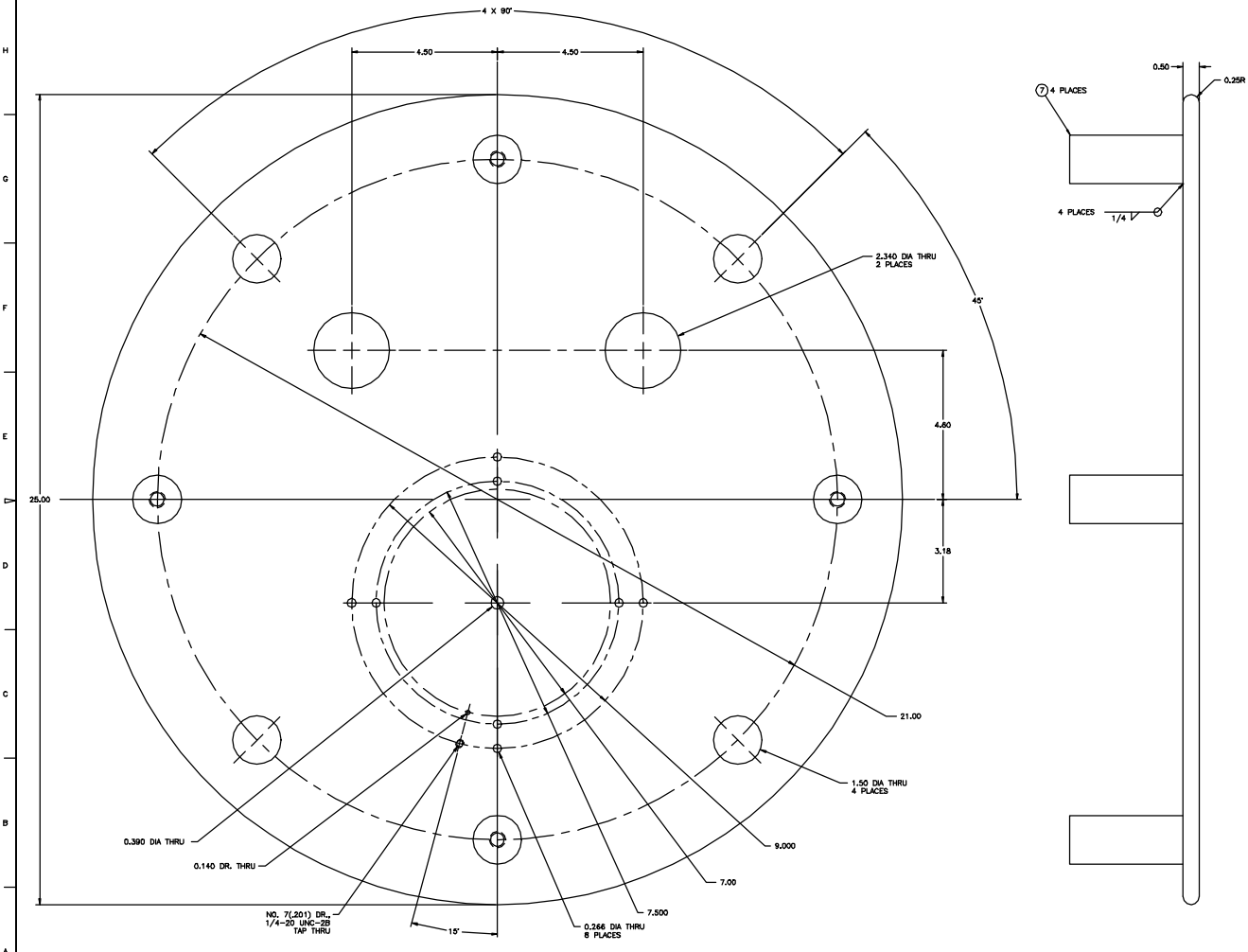

ITEM 12

MATERIAL: 6061-T6 ALUMINUM

DO NOT SCALE DRAWING

HIGH VOLTAGE OUTPUT MODULE

SIZE	DWG. NO.	REV.
E	C0462E01	A

SCALE 1"=1" | SHEET 7 OF 11

C0462E01

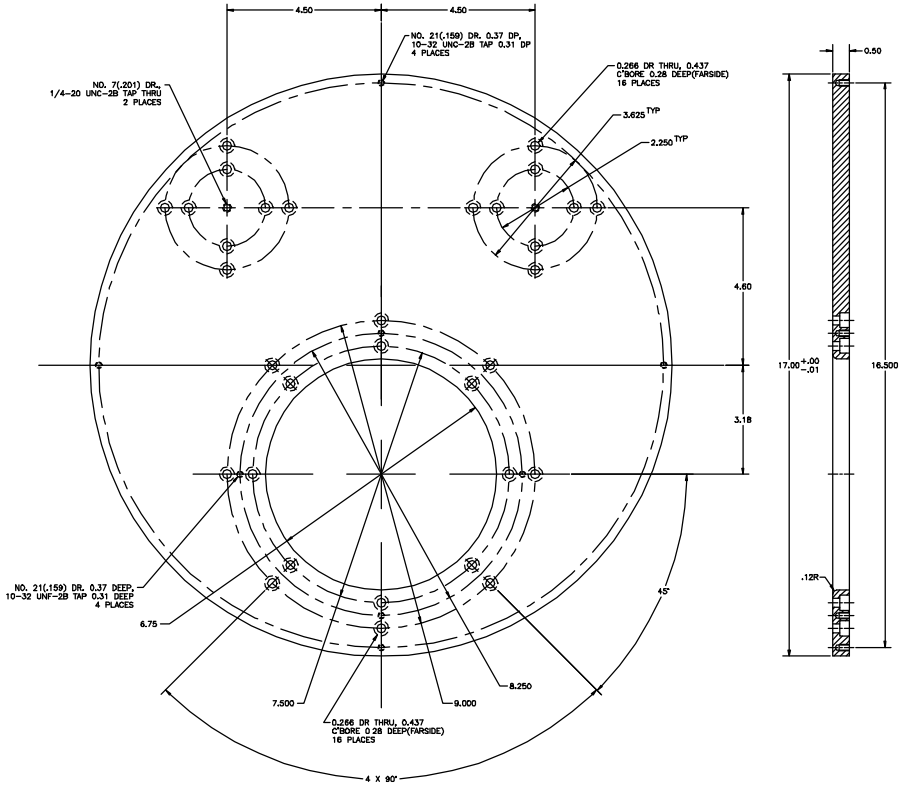

ITEM 13
MATERIAL: 6061-T6 ALUMINUM

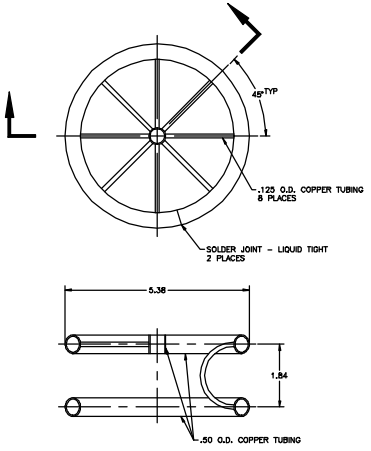

ITEM 14
ALL SOLDER JOINTS ARE
TO BE LIQUID TIGHT

DO NOT SCALE DRAWING

HIGH VOLTAGE OUTPUT MODULE

C0462E01 A

SCALE 1"=1" SHEET 8 OF 11

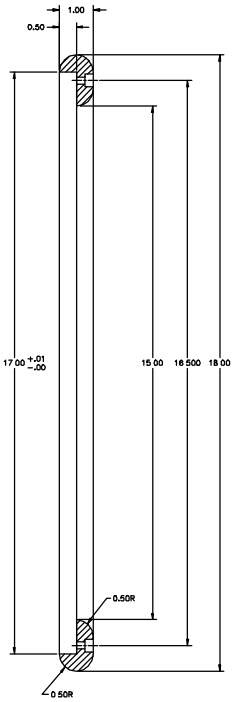

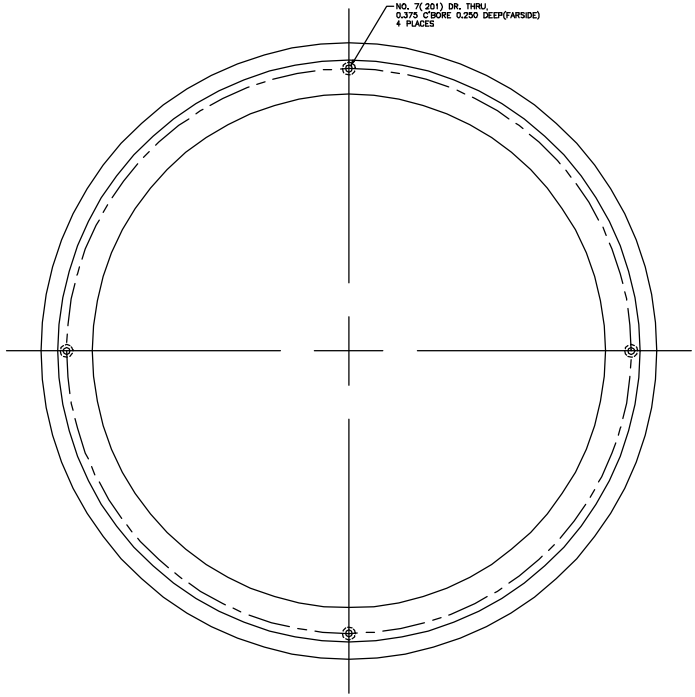

ITEM 15
MATERIAL: 6061-T6 ALUMINUM

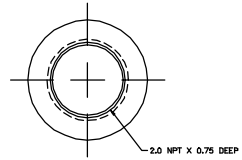

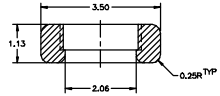

ITEM 16
MATERIAL: 6061-T6 ALUMINUM

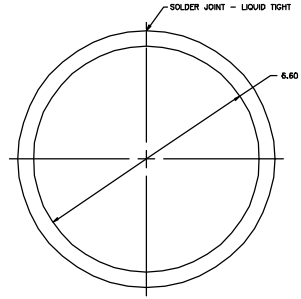

ITEM 18
MATERIAL: .50 O.D. COPPER TUBING

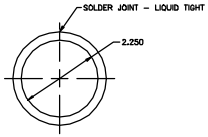

ITEM 17
MATERIAL: .25 O.D. COPPER TUBING

DO NOT SCALE DRAWING		HIGH VOLTAGE OUTPUT MODULE
		SIZE E — DWG. NO. C0462E01 — REV. A
		SCALE 1"=1" — SHEET 9 OF 11

DWG. NO. C0462E01 REV. 9 SHEET A

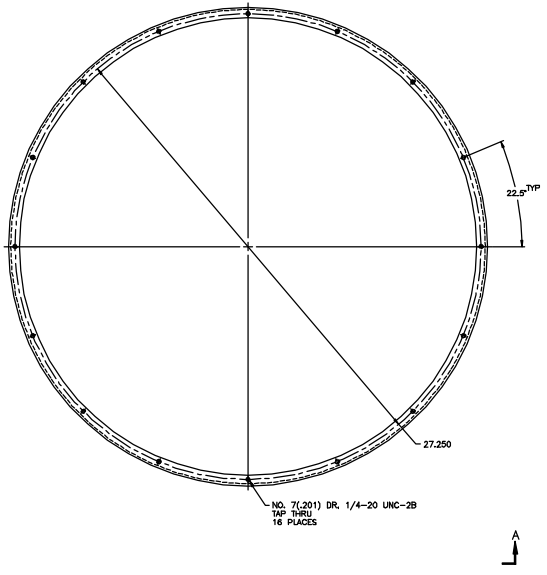

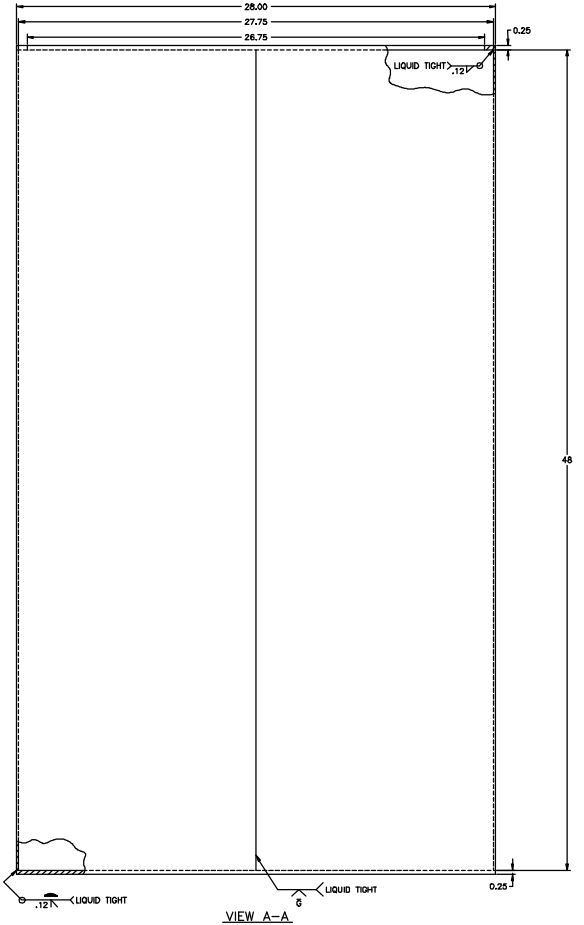

VIEW A-A

ITEM 19

MATERIAL: COLD ROLLED STEEL

INTERIOR OF DRUM IS TO BE FREE OF RUST AND DEBRIS

DO NOT SCALE DRAWING

HIGH VOLTAGE OUTPUT MODULE

C0462E01

A

SHEET 10 OF 11

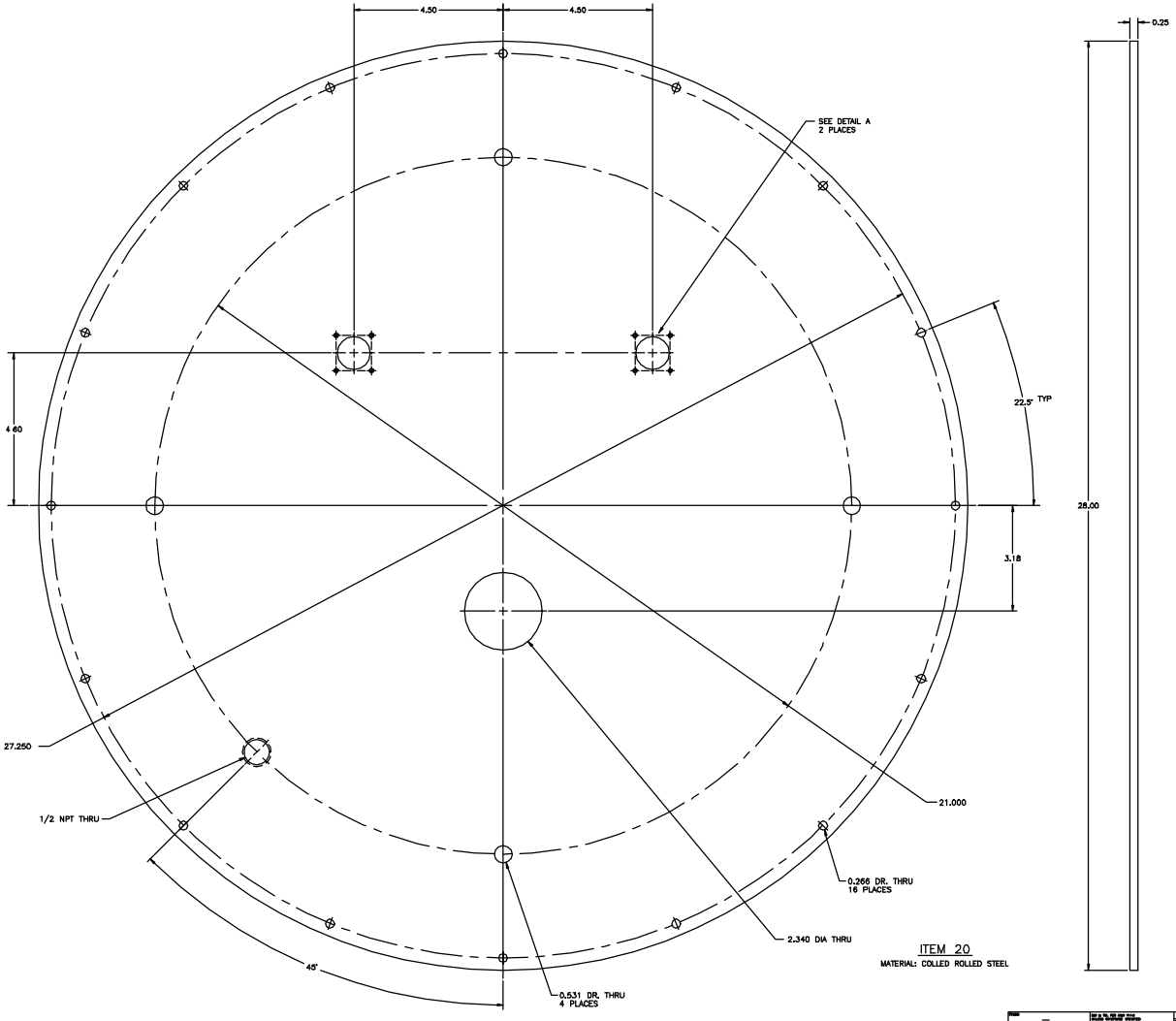

ITEM 20

MATERIAL: COLLED ROLLED STEEL

DETAIL A

DO NOT SCALE DRAWING

HIGH VOLTAGE OUTPUT MODULE

E C0462E01 A

SCALE 1"=1" SHEET 11 OF 11

DWG. NO. C0462E01 SHT. 11 REV. A