Opto Coupler OC100HG

- High Current Gain
- High Isolation Voltage
- RoHS Compliant

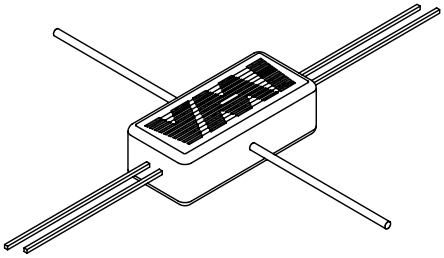

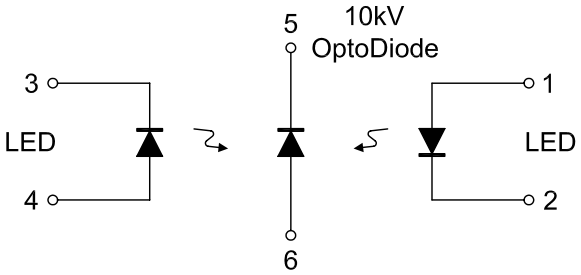

ABSOLUTE MAXIMUM RATINGS	
LED	
• Forward DC Current	100 mA
• Surge Current	500 mA
• Reverse Voltage	5 V
• Power Dissipation (25°C)	190 mW
Photodiode	
• Reverse Voltage	10,000 V
• Power Dissipation	1.0 W
• Storage Temperature	-40°C to +100°C
• Operating Temperature	-40°C to +70°C
• Isolation Test Voltage	25 kV (From Pins 1, 2, 3 & 4 to Pins 5 & 6)

ELECTRICAL CHARACTERISTICS	
LED	
• Forward Voltage (If = 20 mA)	1.5 V
• Reverse Leakage Current VR = 5 V	100 nA
Photodiode	
• Foward Voltage (If = 0.6 A)	12.0 V MAX
• Reverse Leakage Current	
VR = 10 kV, I_{LED} = 0 mA	250 nA Typical
VR = 10 kV, I_{LED} = 50 mA	230 µA Typical
Coupled	
• DC Current Transfer Ratio	0.38% MIN / 0.60% MAX
• T_{ON}	2 µs
• T_{OFF}	2 µs
(25°C UNLESS OTHERWISE NOTED)	

VOLTAGE MULTIPLIERS INC.
8711 W. Roosevelt Ave.
Visalia, CA 93291

TEL 559-651-1402
FAX 559-651-0740
www.voltagemultipliers.com

OC100HG

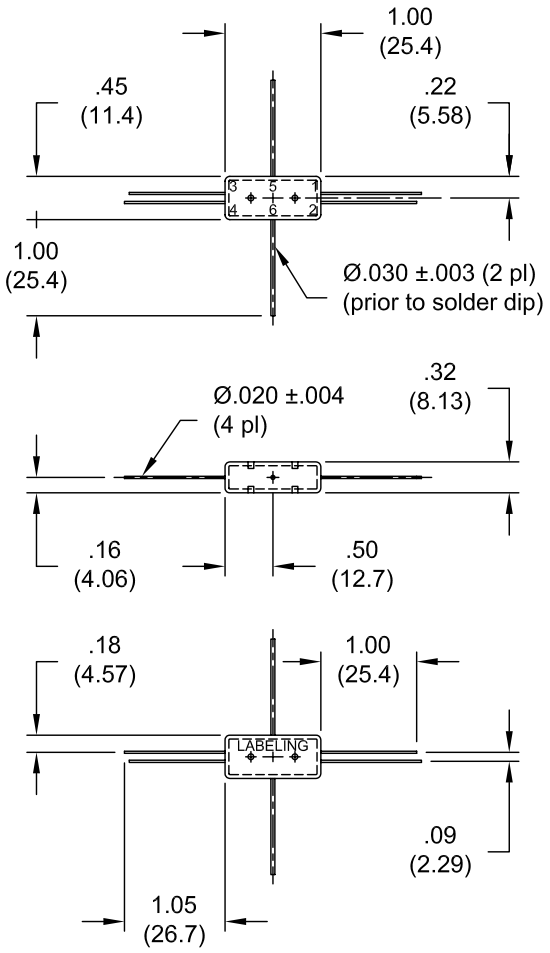
1.00
(25.4)
.45
(11.4)
.22
(5.58)
1.00
(25.4)
Ø.030 ±.003 (2 pl)
(prior to solder dip)
Ø.020 ±.004
(4 pl)
.32
(8.13)
.16
(4.06)
.50
(12.7)
.18
(4.57)
1.00
(25.4)
LABELING
.09
(2.29)
1.05
(26.7)

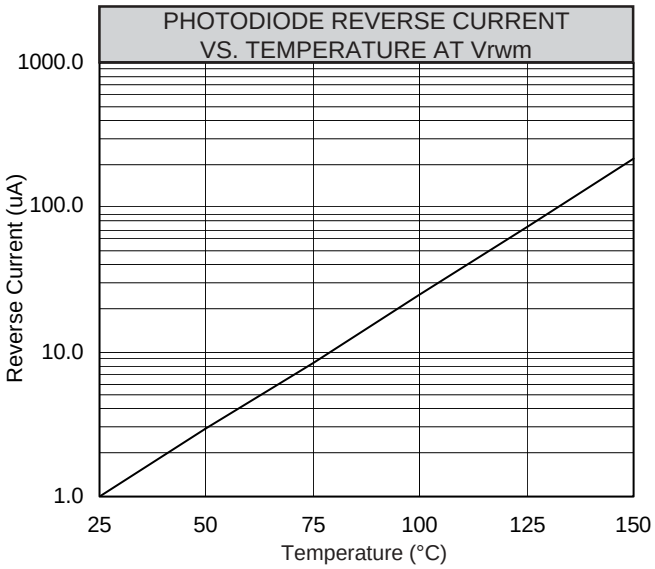
PHOTODIODE REVERSE CURRENT
VS. TEMPERATURE AT Vrwm
Reverse Current (uA)
1000.0
100.0
10.0
1.0
25
50
75
100
125
150
Temperature (°C)

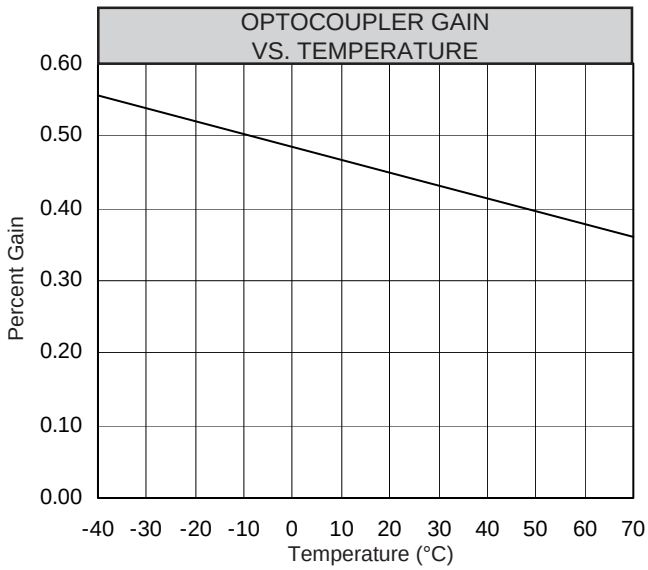
OPTOCOUPLER GAIN
VS. TEMPERATURE
Percent Gain
0.60
0.50
0.40
0.30
0.20
0.10
0.00
-40
-30
-20
-10
0
10
20
30
40
50
60
70
Temperature (°C)

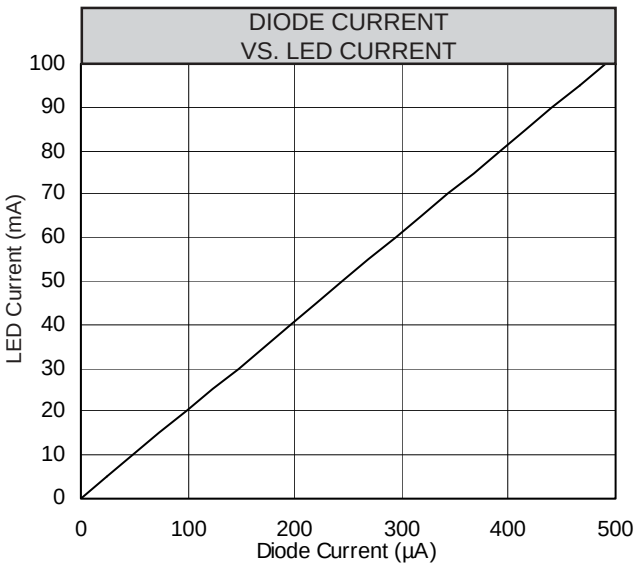
DIODE CURRENT
VS. LED CURRENT
LED Current (mA)
100
90
80
70
60
50
40
30
20
10
0
0
100
200
300
400
500
Diode Current (µA)

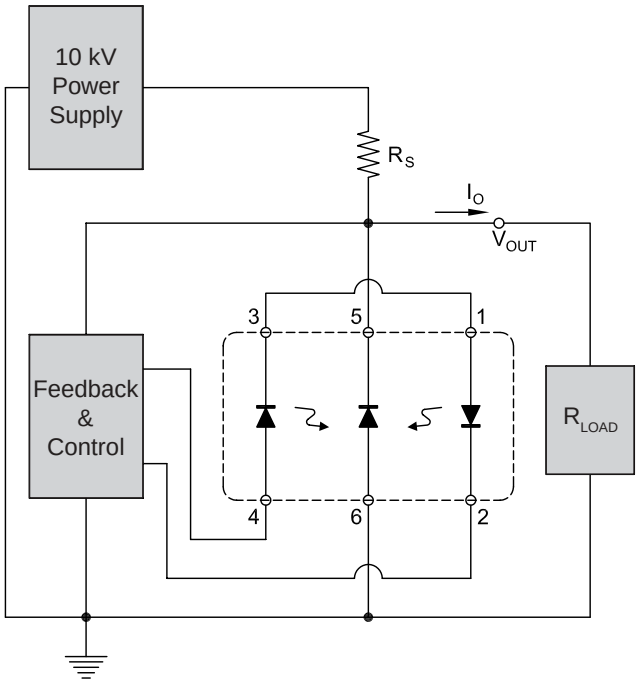

Typical HV Linear Regulator Circuit

- The two graphs below represent the relationship between output voltage and LED current with different values of Rs.
- Output voltage is found by the following formula:
  $V_{OUT} = V_{IN} - \{[I_{OUT} + (I_{LED} * Gain)] * R_S\}$
- Select resistor value to optimize circuit for V_{OUT} and I_{OUT} range.