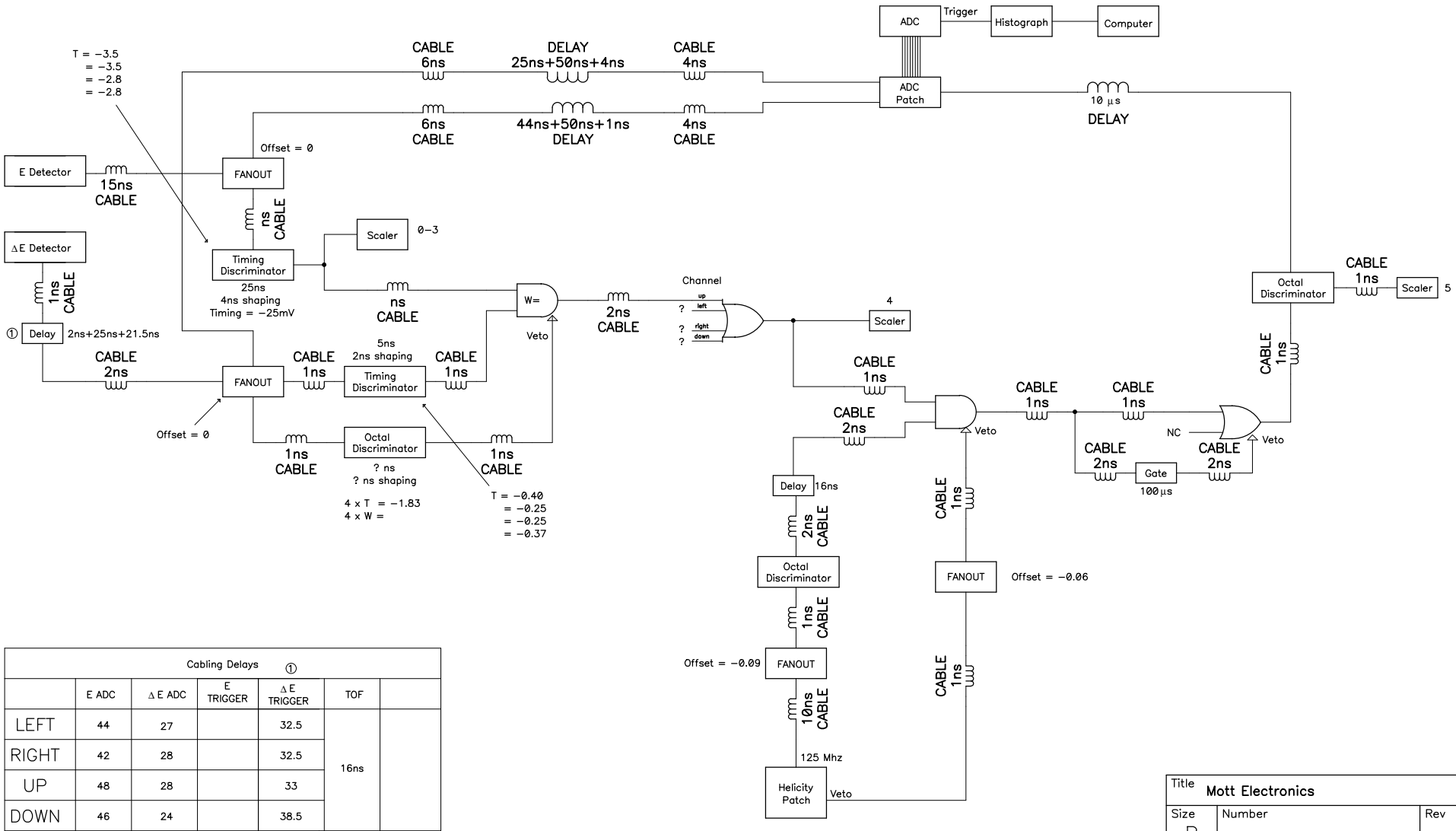

Cabling Delays ①						
	E ADC	Δ E ADC	E TRIGGER	Δ E TRIGGER	TOF	
LEFT	44	27		32.5	16ns	
RIGHT	42	28		32.5		
UP	48	28		33		
DOWN	46	24		38.5		
	+50	+50				

Title	Mott Electronics	
Size B	Number	Rev
Date July−17−2000		Drawn by A.R.Day
Filename mott2.pdf		Sheet 1 of 1