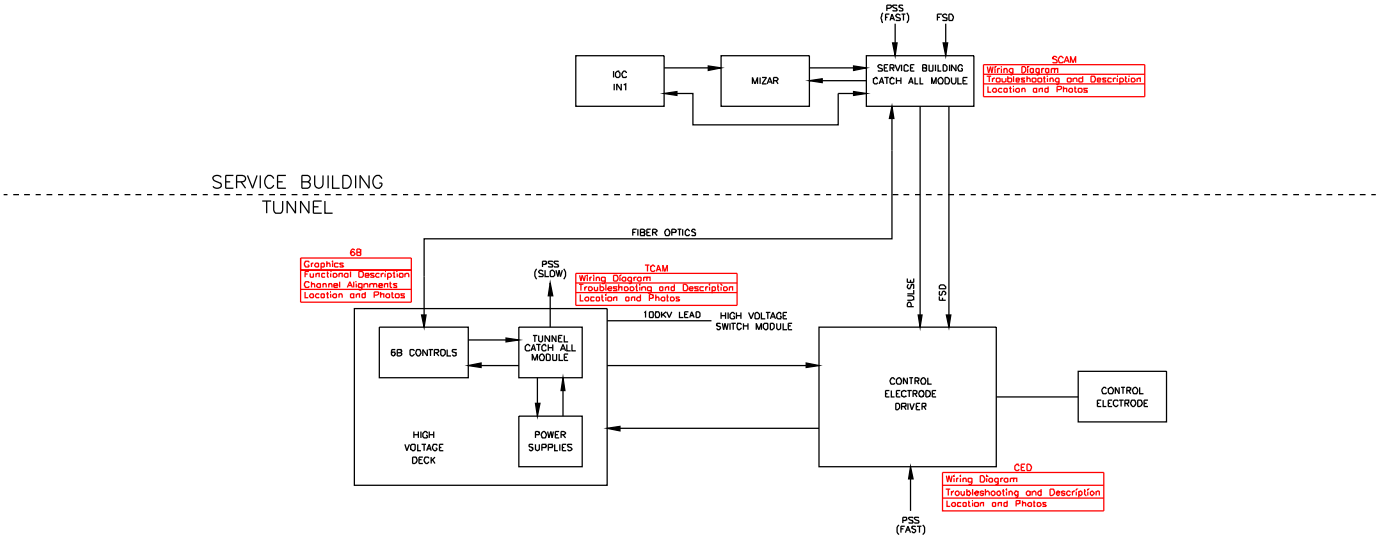

NOTES:

1. FAST PSS IS THE BCM SYSTEM INTENDED TO TURN OFF THE ELECTRON BEAM WITHIN 10uS OF DETERMINING A FAULT.
2. SLOW PSS IS THE PLC BASED SYSTEM INTENDED TO ENSURE PERSONNEL SAFETY IN THE TUNNEL ENCLOSURE AND SERVICE BUILDINGS.

REV.	REMARKS	DRAWN	DATE	APPVD
B	REVISED PER ECO E0576	JCW	06/24/98	
A	REVISED PER ECO E0513	DAW	04/01/98	

TITLE: CONTROLS
THERMIONINC GUN SYSTEM
BLOCK DIAGRAM

DRAWN: D. WILLIAMS	DATE: 08/18/95
CHECKED: D. CUMMINS	DATE: 09/27/95
DRAFTSPERSON: E. WOODWORTH	DATE: 09/28/95
ENGINEER: AREN WOODWORTH	

Thomas Jefferson National Accelerator Facility
operated by the Southeastern Universities Research Association for the U.S. Department of Energy

CAD I.D. NO.: VAX\CONT\CO439D01 CO439D01.DWG
SIZE: D
DRAWING NO.: C0439D01
REV: B
SCALE: —
SHEET 1 OF 1