DWG. NO.	SH.	REV.
Y0501D01	1	–

REVISIONS

REV.	REMARKS	DRAWN	DATE	APPROVED

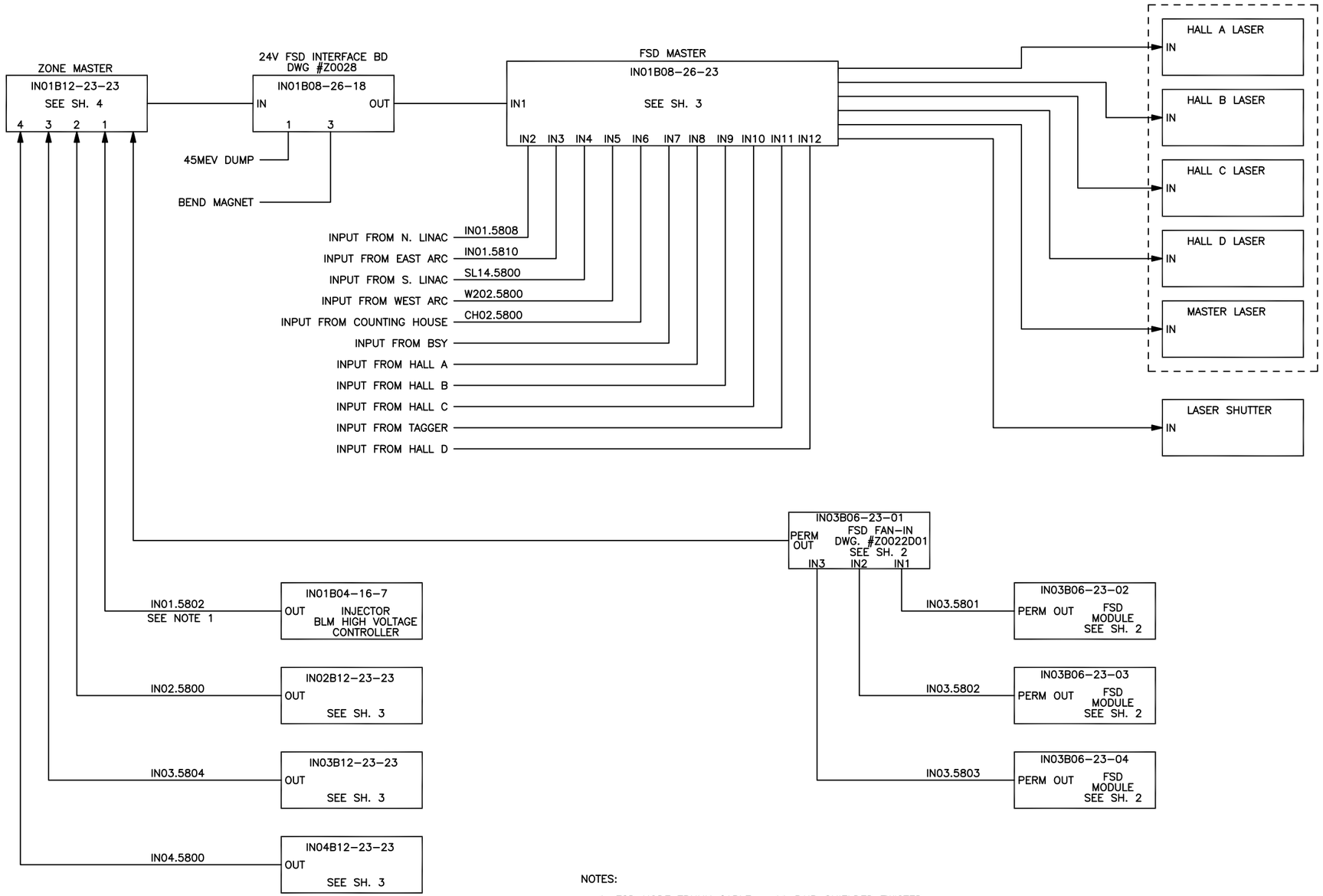

NOTES:

1. FSD NODE TRUNK CABLE – 11 PAIR SHIELDED TWISTED PAIR WITH INDIVIDUAL SHIELD #22 AWG BELDEN #9876 OR EQUIV
2. BLM NODE TRUNK CABLE – 6 PAIR SHIELDED TWISTED PAIR WITH INDIVIDUAL SHIELD #22 AWG BELDEN #9874 OR EQUIV
3. FIBER OPTIC CABLE IS 62.5/125 uM
4. WILL NOT BE INSTALLED UNLESS FUTURE NEEDS REQUIRE INSTALLATION
5. SPARE FIBER OPTIC CABLES NOT SHOWN
6. FAST VALVE CABLE IS BELDEN 1033A OR EQUIV
7. P1 BACKPLANE INPUT USED FOR RF SUMMED FAULT VIA BUFFER CARD

DRAWN: ZUKERMAN	DATE: 5/9/08	Thomas Jefferson National Accelerator Facility, NEWPORT NEWS, VIRGINIA, UNITED STATES DEPARTMENT OF ENERGY
CHECKED	DATE	TITLE: MACHINE SAFETY SYSTEM 12 GeV FSD SYSTEM INJECTOR ZONE WIRING DIAGRAM
APPR/ORIGINATOR	DATE	
APPROVED		
ENGINEER: R. WRIGHT		SIZE: D; CAD I.D. NO.: \\JLABGRP\EECAD... Y0501W1.DWG; DRAWING NO.: Y0501D01; REV.: –
		SCALE: —; SHOWN ON: —; SHEET 1 OF 1