DWG. NO.	SH.	REV.
{Drawing Number}	1	-

REVISIONS

REV.	REMARKS	DRAWN	DATE	APPROVED

NOTES:
1. ALL RESISTORS IN OHMS, 1/4W, 1% UNLESS OTHERWISE SPECIFIED.
2. ALL CAPACITORS IN MICROFARADS UNLESS OTHERWISE SPECIFIED.
3. FOR FABRICATION DETAILS OF {PCB Name} SEE JEFFERSON LAB DRAWING XXXXXXXX.
4. FOR ARTWORK OF {PCB Name} SEE JEFFERSON LAB DRAWING XXXXXXXX.
5. FOR ASSEMBLY OF {PCB Name} SEE JEFFERSON LAB DRAWING XXXXXXXX.

DRAWN: R. BACHIMANCHI	DATE: 05/28/07
CHECKED	DATE
APPR/ORIGINATOR	DATE
APPROVED	
ENGINEER: T. ALLISON	

Jefferson Lab
Thomas Jefferson National Accelerator Facility
NEWPORT NEWS, VIRGINIA
UNITED STATES DEPARTMENT OF ENERGY

TITLE
MAJOR SYSTEM
SUB-SYSTEM
FSD MASTER DAUGHTERBOARD
SCHEMATIC

SIZE	CAD I.D. NO.	DRAWING NO.	REV.
B	//EECAD... FSD_Master_Daughterboard.sch	{Drawing Number}	

SCALE	SHOWN ON	SHEET	OF
NONE	DRAWING NUMBER	1	5

DWG. NO. {Drawing Number} | SH. 2 | REV. -

REVISIONS

REV.	REMARKS	DRAWN	DATE	APPROVED

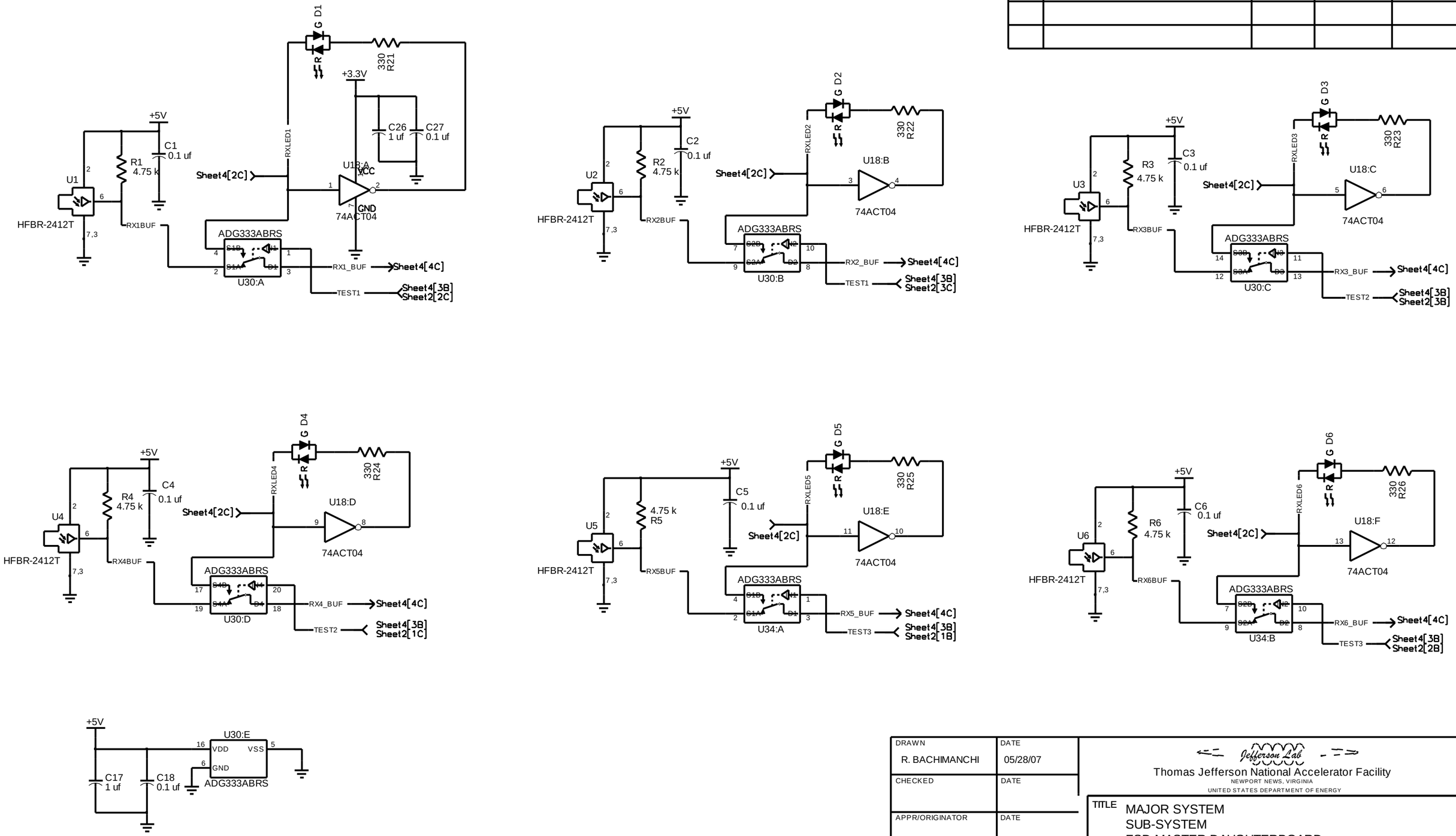

DRAWN R. BACHIMANCHI	DATE 05/28/07
CHECKED	DATE
APPR/ORIGINATOR	DATE
APPROVED	
ENGINEER T. ALLISON	

Jefferson Lab
Thomas Jefferson National Accelerator Facility
NEWPORT NEWS, VIRGINIA
UNITED STATES DEPARTMENT OF ENERGY

TITLE
MAJOR SYSTEM
SUB-SYSTEM
FSD MASTER DAUGHTERBOARD
SCHEMATIC

SIZE	CAD I.D. NO.	DRAWING NO.	REV.
B	//EECAD... FSD_Master_Daughterboard.sch	{Drawing Number}	-

SCALE	SHOWN ON	SHEET	OF
NONE	DRAWING NUMBER	2	5

DWG. NO.	SH.	REV.
{Drawing Number}	3	-

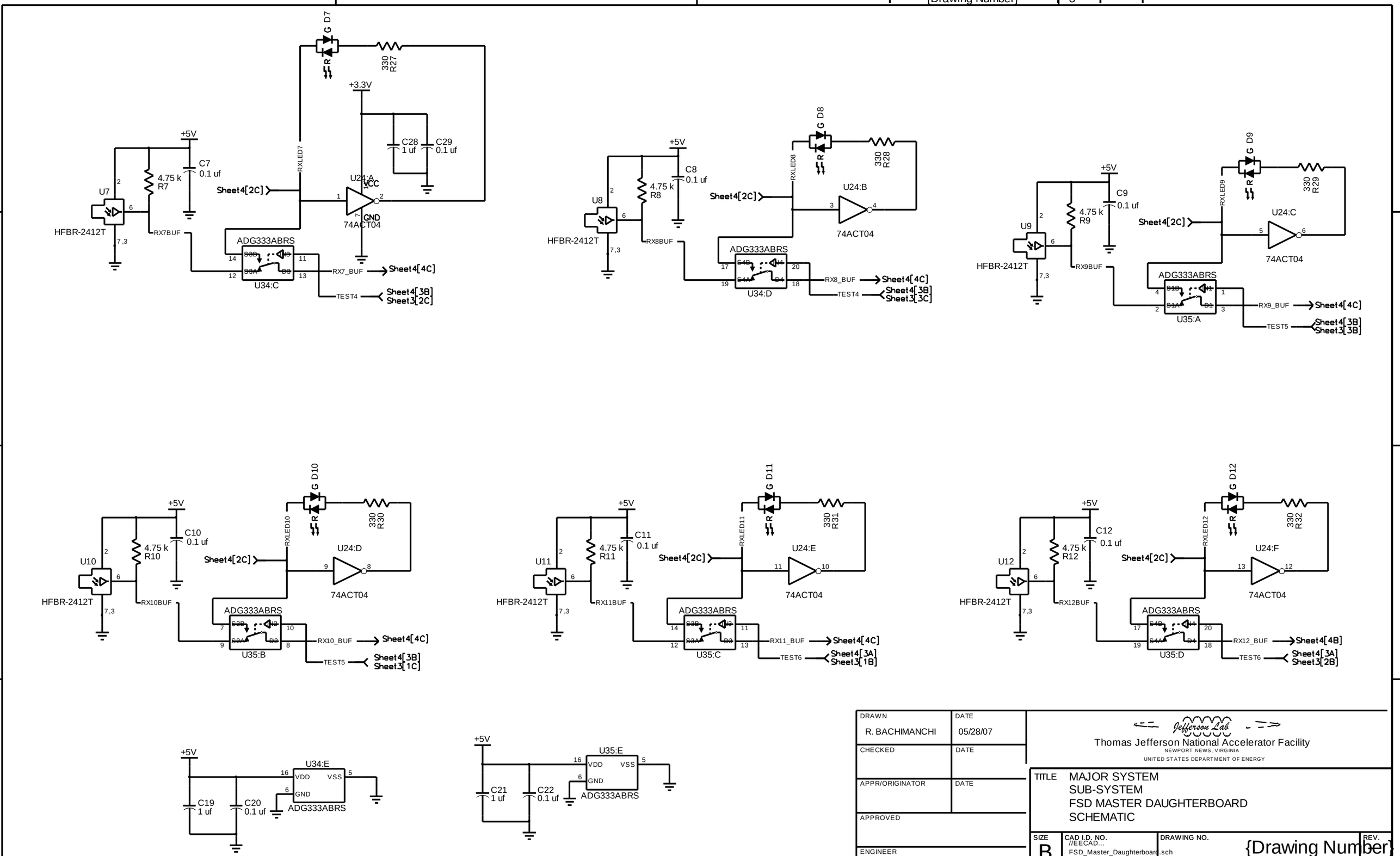

DRAWN	DATE
R. BACHIMANCHI	05/28/07
CHECKED	DATE
APPR/ORIGINATOR	DATE
APPROVED	
ENGINEER	
T. ALLISON	

Jefferson Lab
Thomas Jefferson National Accelerator Facility
NEWPORT NEWS, VIRGINIA
UNITED STATES DEPARTMENT OF ENERGY

TITLE
MAJOR SYSTEM
SUB-SYSTEM
FSD MASTER DAUGHTERBOARD
SCHEMATIC

SIZE	CAD I.D. NO.	DRAWING NO.	REV.
B	//EECAD... FSD_Master_Daughterboard.sch	{Drawing Number}	
SCALE NONE	SHOWN ON DRAWING NUMBER	SHEET 3 OF 5	

DWG. NO. {Drawing Number} SH. 4 REV. -

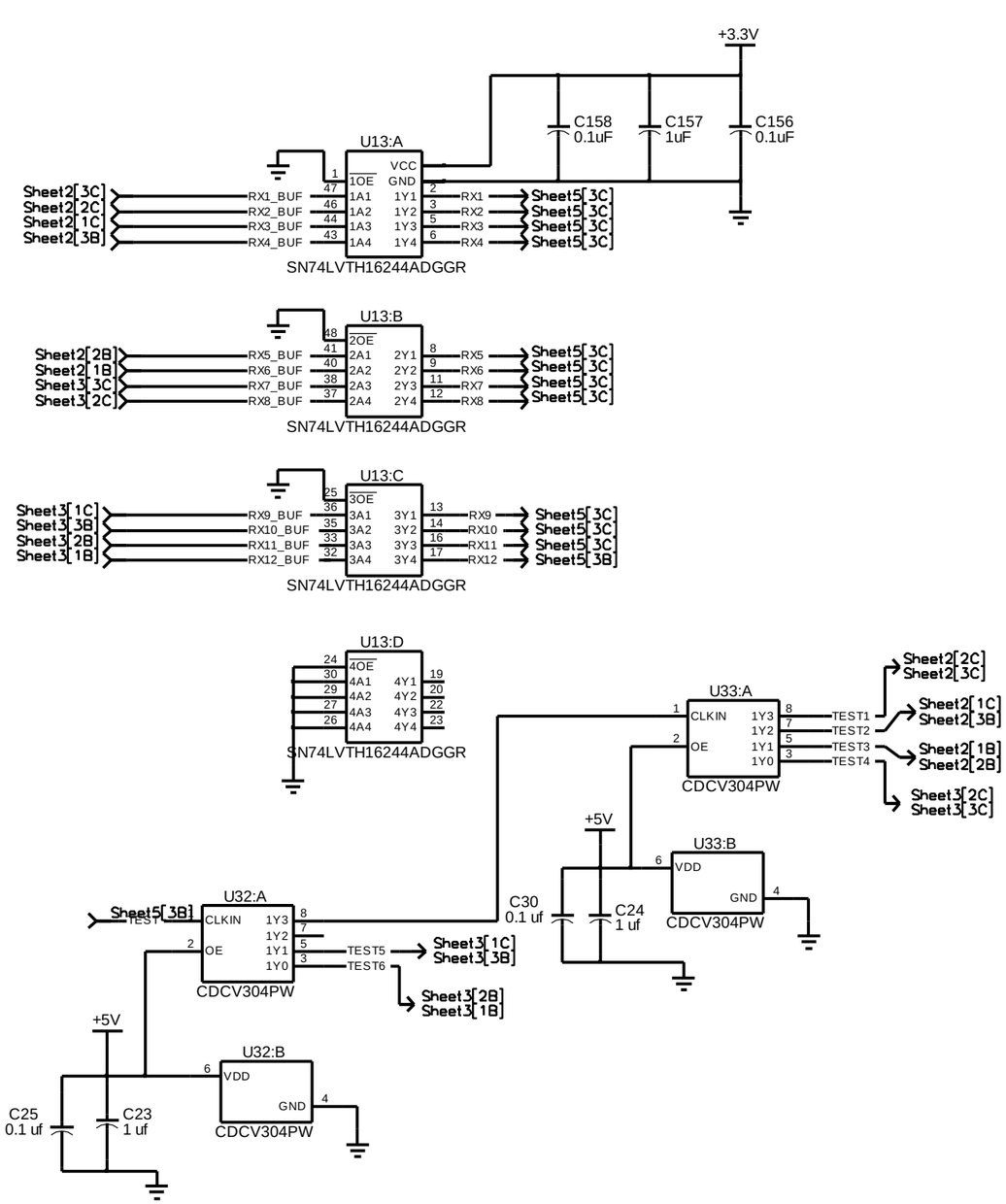

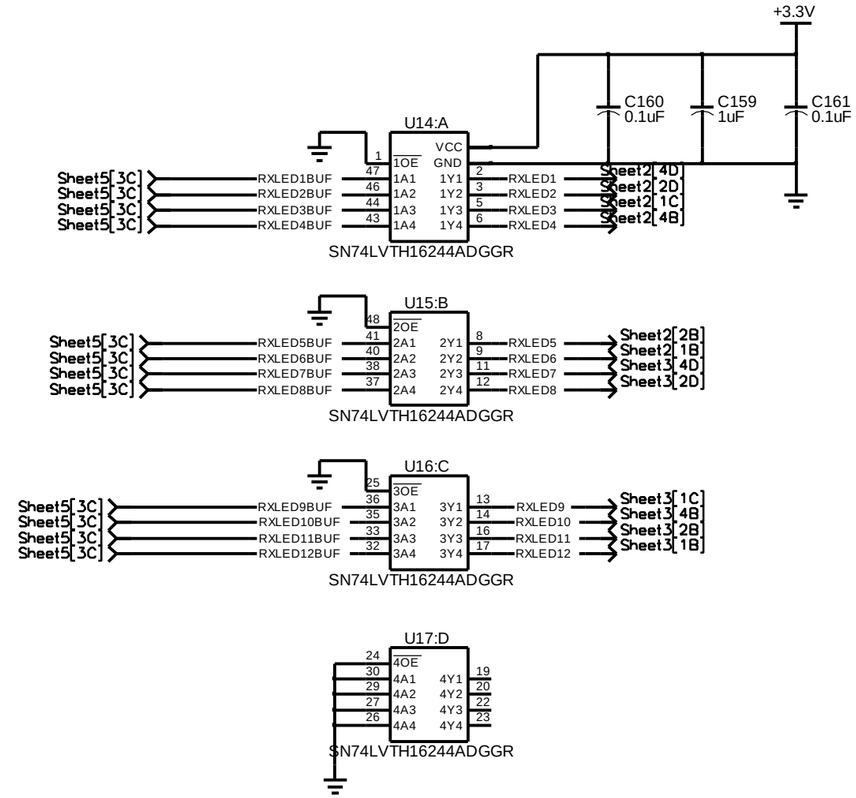

DRAWN R. BACHIMANCHI	DATE 05/28/07	Thomas Jefferson National Accelerator Facility NEWPORT NEWS, VIRGINIA UNITED STATES DEPARTMENT OF ENERGY
CHECKED	DATE	TITLE MPS FSD FSD MASTER DAUGHTERBOARD SCHEMATIC
APPR/ORIGINATOR	DATE	
APPROVED		SIZE B · CAD I.D. NO. //EECAD... FSD_Master_Daughterboard.sch · DRAWING NO. {Drawing Number} · REV. -
ENGINEER T. ALLISON		SCALE NONE · SHOWN ON DRAWING NUMBER · SHEET 4 OF 5

DWG. NO. {Drawing Number} SH. 5 REV. -

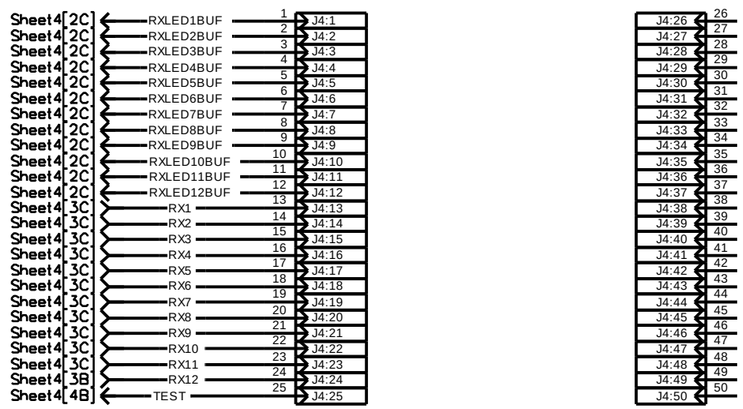

DRAWN R. BACHIMANCHI	DATE 05/28/07
CHECKED	DATE
APPR/ORIGINATOR	DATE
APPROVED	
ENGINEER T. ALLISON	

Jefferson Lab

Thomas Jefferson National Accelerator Facility
NEWPORT NEWS, VIRGINIA
UNITED STATES DEPARTMENT OF ENERGY

TITLE MAJOR SYSTEM
SUB-SYSTEM
FSD MASTER DAUGHTERBOARD
SCHEMATIC

SIZE	CAD I.D. NO.	DRAWING NO.	REV.
B	//EECAD... FSD_Master_Daughterboard.sch	{Drawing Number}	-

SCALE	SHOWN ON	SHEET	OF
NONE	DRAWING NUMBER	5	5