DWG. NO.	SH.	REV.
S0502D01	1	–

REVISIONS

REV.	REMARKS	DRAWN	DATE	APPROVED

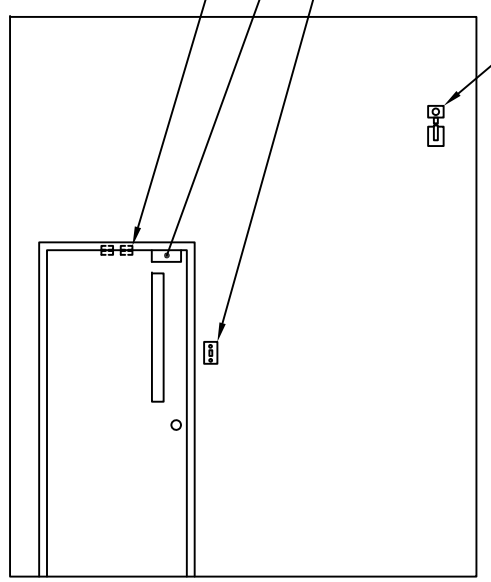

NORTH WALL

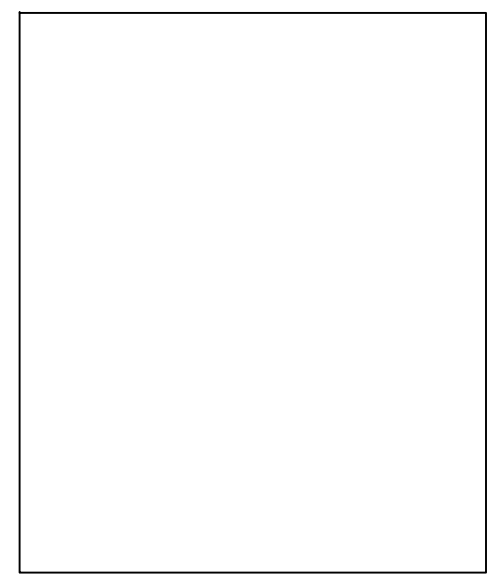

EAST WALL

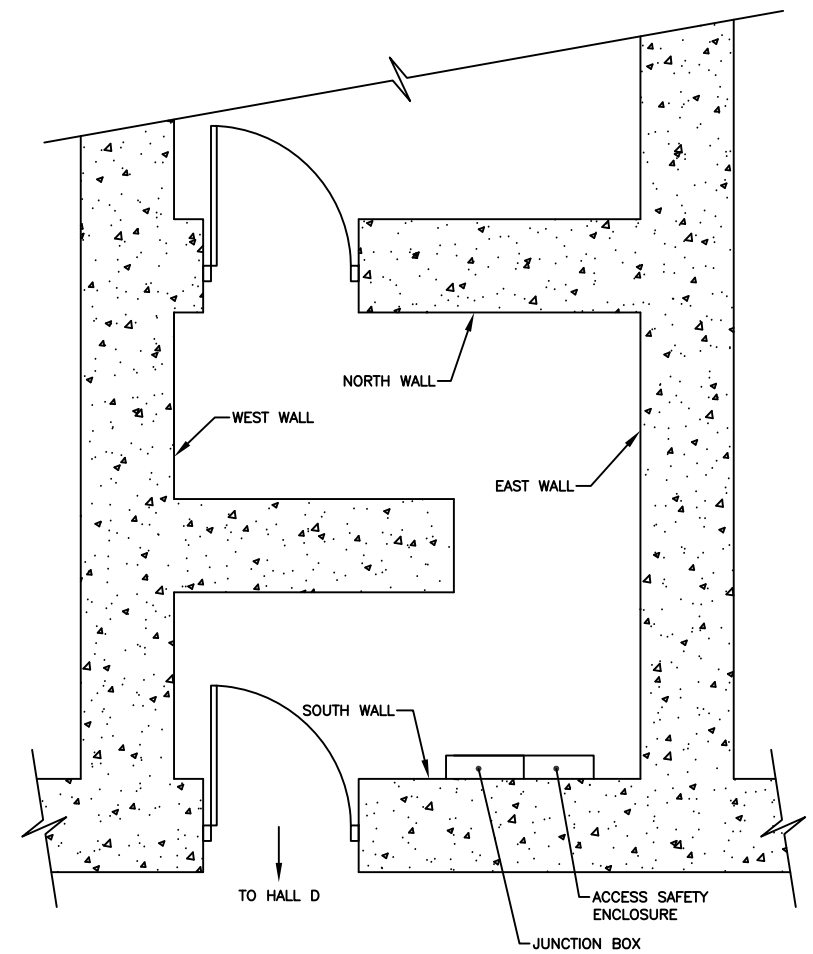

PLAN VIEW

PROJECT NORTH

TRUE NORTH

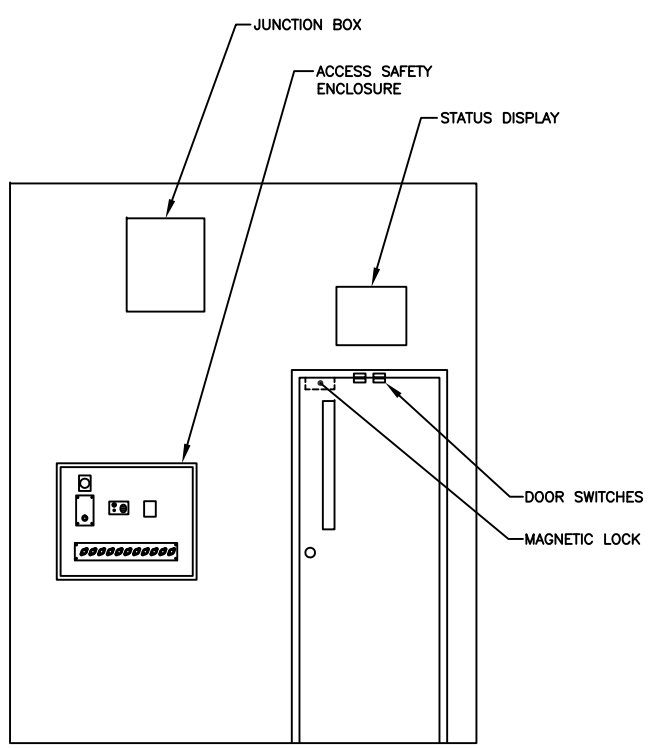

SOUTH WALL

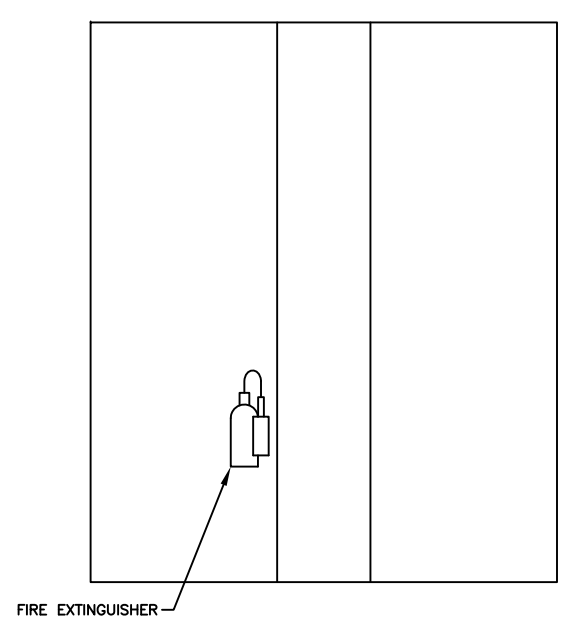

WEST WALL

DRAWN D. WILLIAMS	DATE 05/14/07	Thomas Jefferson National Accelerator Facility, NEWPORT NEWS, VIRGINIA, UNITED STATES DEPARTMENT OF ENERGY
CHECKED	DATE	TITLE PERSONNEL SAFETY SYSTEM HALL D ACCESS ROOM EQUIPMENT LAYOUT
APPR/ORIGINATOR	DATE	
APPROVED		
ENGINEER H. ROBERTSON		SIZE D · CAD I.D. NO. \\JLABGRP\EECAD\...S0502L1.DWG · DRAWING NO. S0502D01 · REV. –
		SCALE NONE · SHOWN ON —— · SHEET 1 OF 1