DWG. NO.	SH.	REV.
S0519D01	1	—

REVISIONS

REV.	REMARKS	DRAWN	DATE	APPROVED

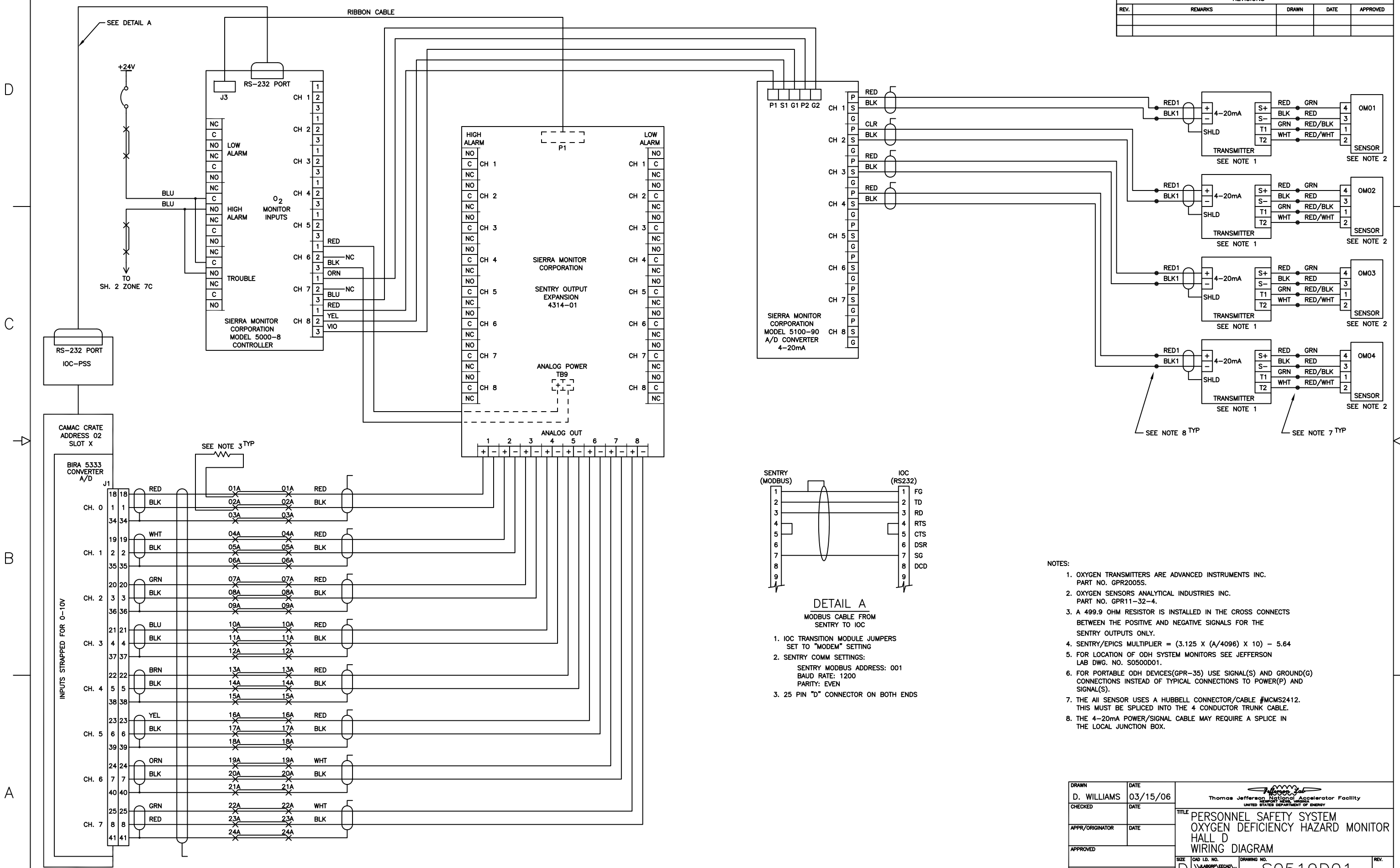

1. IOC TRANSITION MODULE JUMPERS SET TO "MODEM" SETTING
2. SENTRY COMM SETTINGS:
   SENTRY MODBUS ADDRESS: 001
   BAUD RATE: 1200
   PARITY: EVEN
3. 25 PIN "D" CONNECTOR ON BOTH ENDS

NOTES:

1. OXYGEN TRANSMITTERS ARE ADVANCED INSTRUMENTS INC. PART NO. GPR2005S.
2. OXYGEN SENSORS ANALYTICAL INDUSTRIES INC. PART NO. GPR11-32-4.
3. A 499.9 OHM RESISTOR IS INSTALLED IN THE CROSS CONNECTS BETWEEN THE POSITIVE AND NEGATIVE SIGNALS FOR THE SENTRY OUTPUTS ONLY.
4. SENTRY/EPICS MULTIPLIER = (3.125 X (A/4096) X 10) − 5.64
5. FOR LOCATION OF ODH SYSTEM MONITORS SEE JEFFERSON LAB DWG. NO. S0500D01.
6. FOR PORTABLE ODH DEVICES(GPR-35) USE SIGNAL(S) AND GROUND(G) CONNECTIONS INSTEAD OF TYPICAL CONNECTIONS TO POWER(P) AND SIGNAL(S).
7. THE All SENSOR USES A HUBBELL CONNECTOR/CABLE #MCMS2412. THIS MUST BE SPLICED INTO THE 4 CONDUCTOR TRUNK CABLE.
8. THE 4-20mA POWER/SIGNAL CABLE MAY REQUIRE A SPLICE IN THE LOCAL JUNCTION BOX.

DRAWN: D. WILLIAMS	DATE: 03/15/06	Jefferson Lab — Thomas Jefferson National Accelerator Facility, NEWPORT NEWS, VIRGINIA, UNITED STATES DEPARTMENT OF ENERGY
CHECKED	DATE	TITLE: PERSONNEL SAFETY SYSTEM OXYGEN DEFICIENCY HAZARD MONITOR HALL D WIRING DIAGRAM
APPR/ORIGINATOR	DATE	
APPROVED		
ENGINEER: H. ROBERTSON		SIZE: D · CAD I.D. NO.: \\JLABGRP\JECAD\...S0519W1.DWG · DRAWING NO.: S0519D01 · REV.: —
		SCALE: — · SHOWN ON: — · SHEET 1 OF 2