DWG. NO.	SH.	REV.
S0529D01	1	—

REVISIONS

REV.	REMARKS	DRAWN	DATE	APPROVED

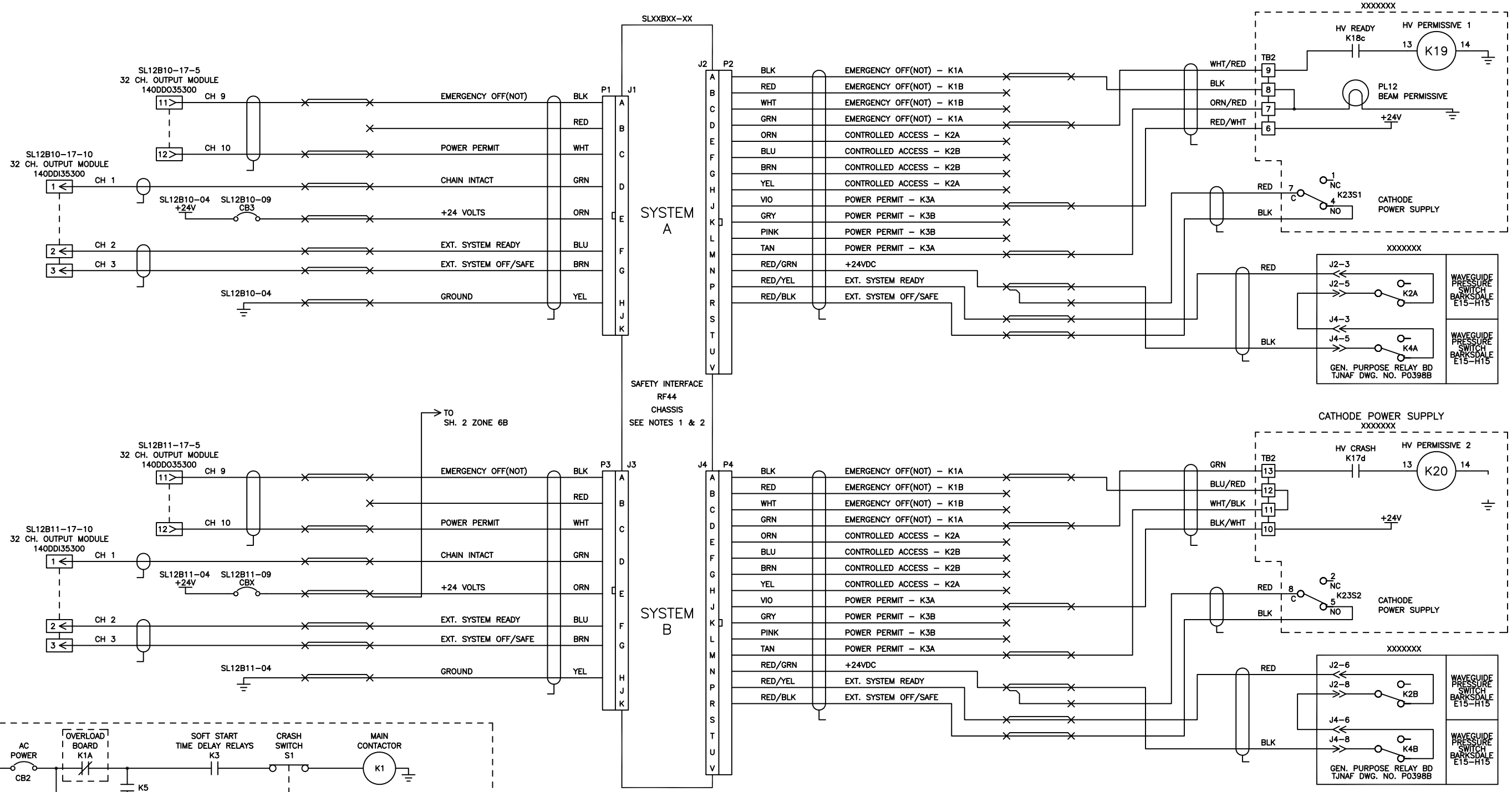

NOTES:

1. FOR WIRING DIAGRAM OF SAFETY INTERFACE CHASSIS SEE JEFFERSON LAB DWG. NO. S0011D01.
2. FOR ASSEMBLY AND FABRICATION DETAILS OF SAFETY INTERFACE CHASSIS SEE JEFFERSON LAB DWG. NO. S0042D01.
3. FOR RF/SAFETY INTERLOCKS SYSTEM DIAGRAM SEE JEFFERSON LAB DWG. NO. S0039D01.
4. ALL RELAYS AND SWITCHES ARE SHOWN IN OFF/SAFE STATE.

DRAWN: D. WILLIAMS	DATE: 03/12/08	Thomas Jefferson National Accelerator Facility, NEWPORT NEWS, VIRGINIA, UNITED STATES DEPARTMENT OF ENERGY
CHECKED	DATE	TITLE: PERSONNEL SAFETY SYSTEM 12GeV UPGRADE – RF/SAFETY INTERLOCKS SOUTH LINAC ZONES SL22-SL26 WIRING DIAGRAM
APPR/ORIGINATOR	DATE	
APPROVED		
ENGINEER: H. ROBERTSON		SIZE: D; CAD I.D. NO.: \\JLABGRP\EECAD\...S0529W1.DWG; DRAWING NO.: S0529D01; REV.: —
		SCALE: —; SHOWN ON: —; SHEET 1 OF 5