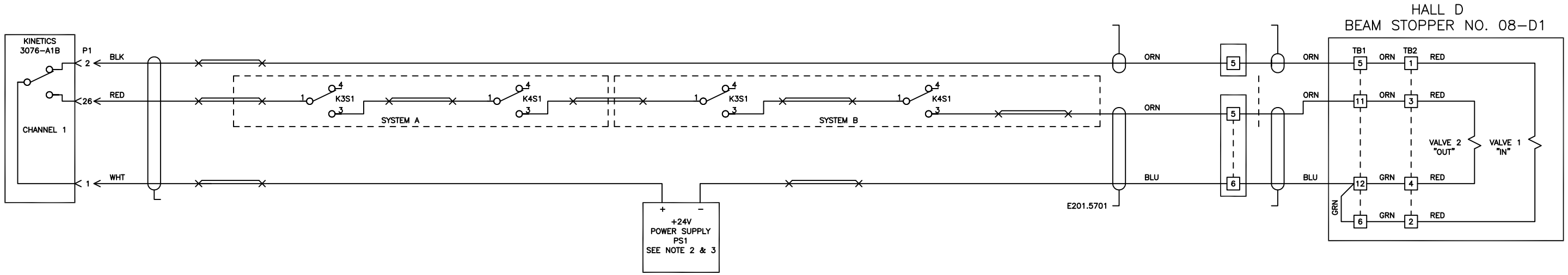

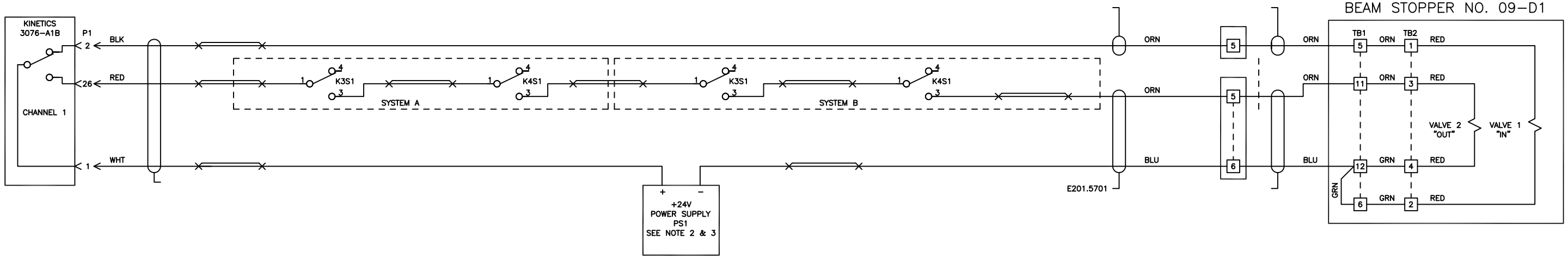

HALL D BEAM STOPPER
WIRING DIAGRAM

SIZE	CAD I.D. NO.	DRAWING NO.	REV.
D	\\LABGRP\EECAD\... S0530W1.DWG	S0530D01	—
SCALE —	SHOWN ON —	SHEET 3 OF 3	