DWG. NO.	SH.	REV.
S0532D01	1	—

REVISIONS

REV.	REMARKS	DRAWN	DATE	APPROVED

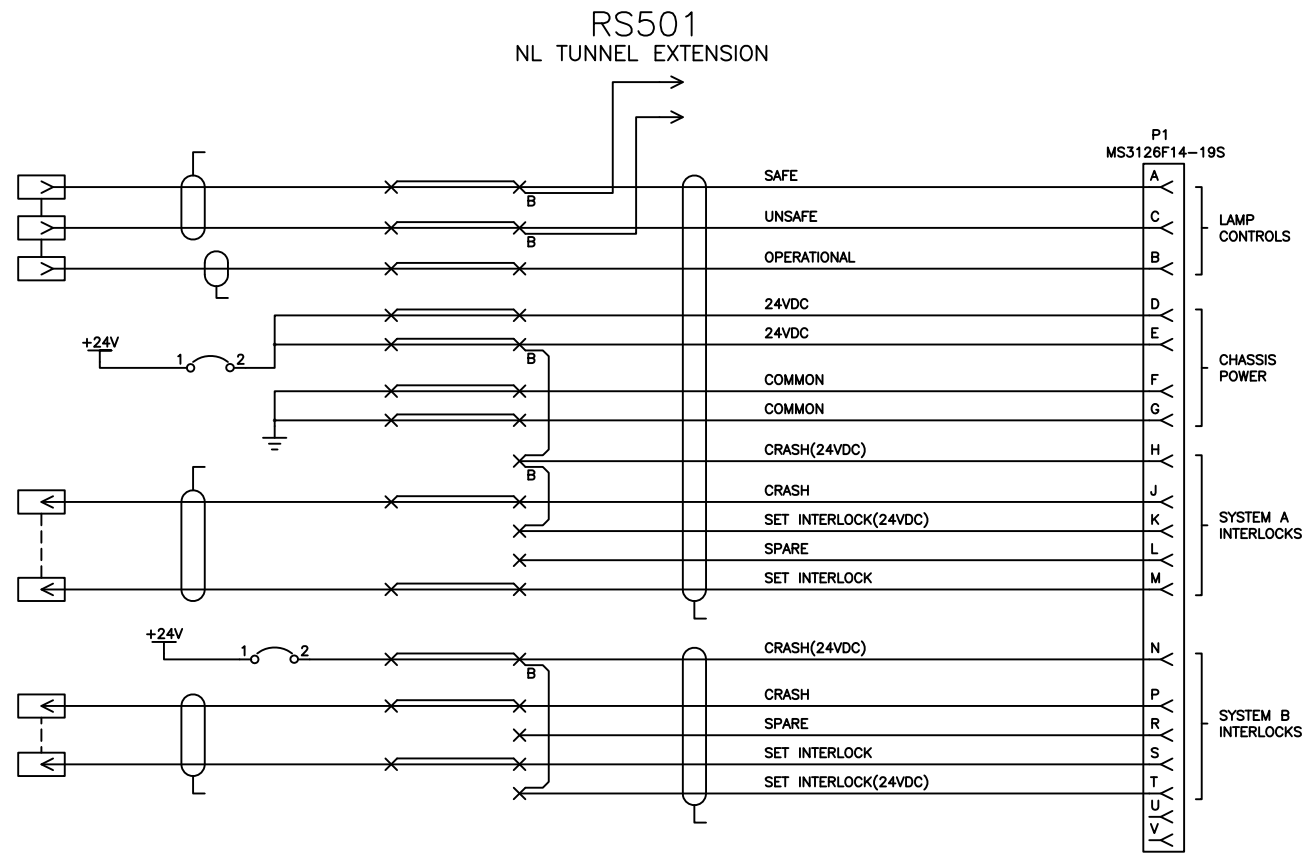

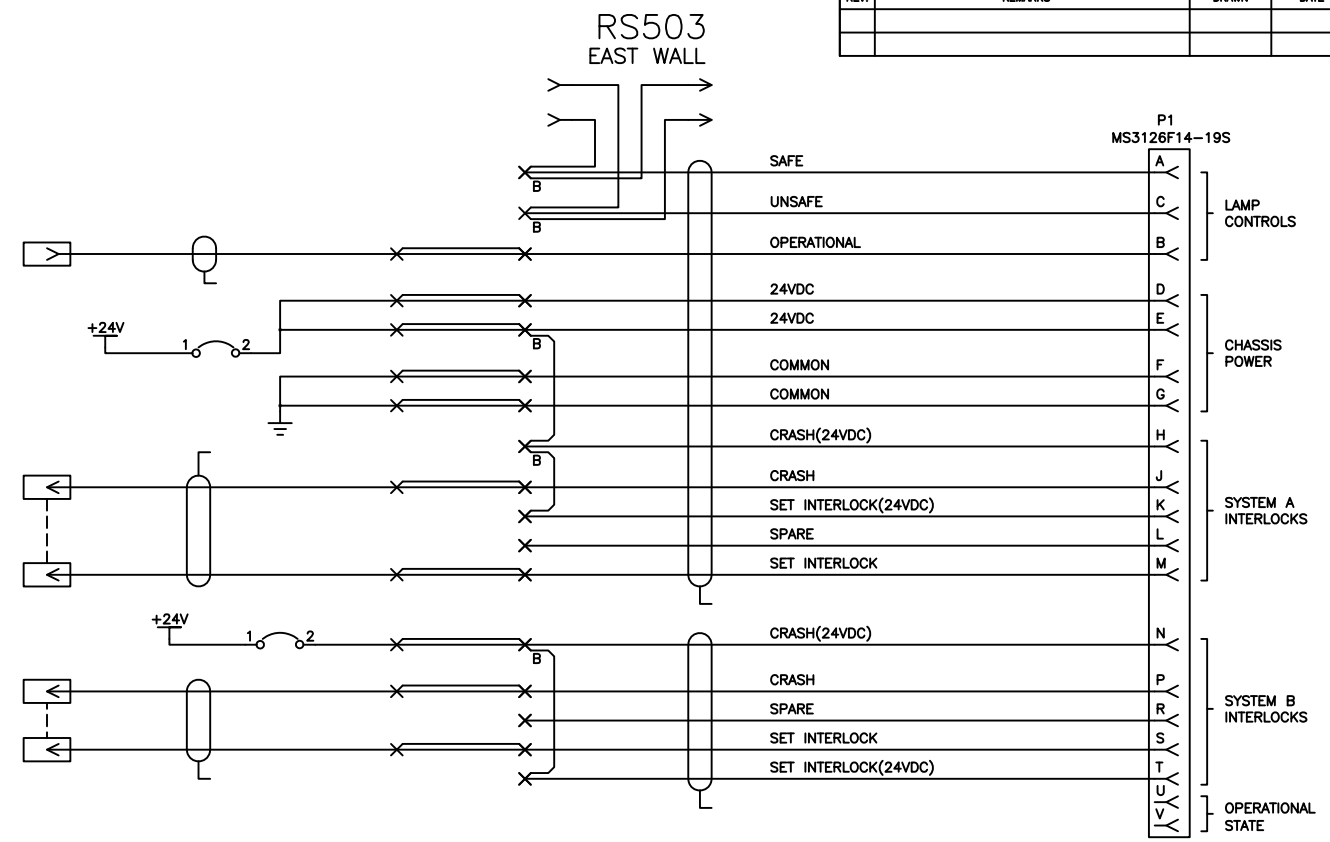

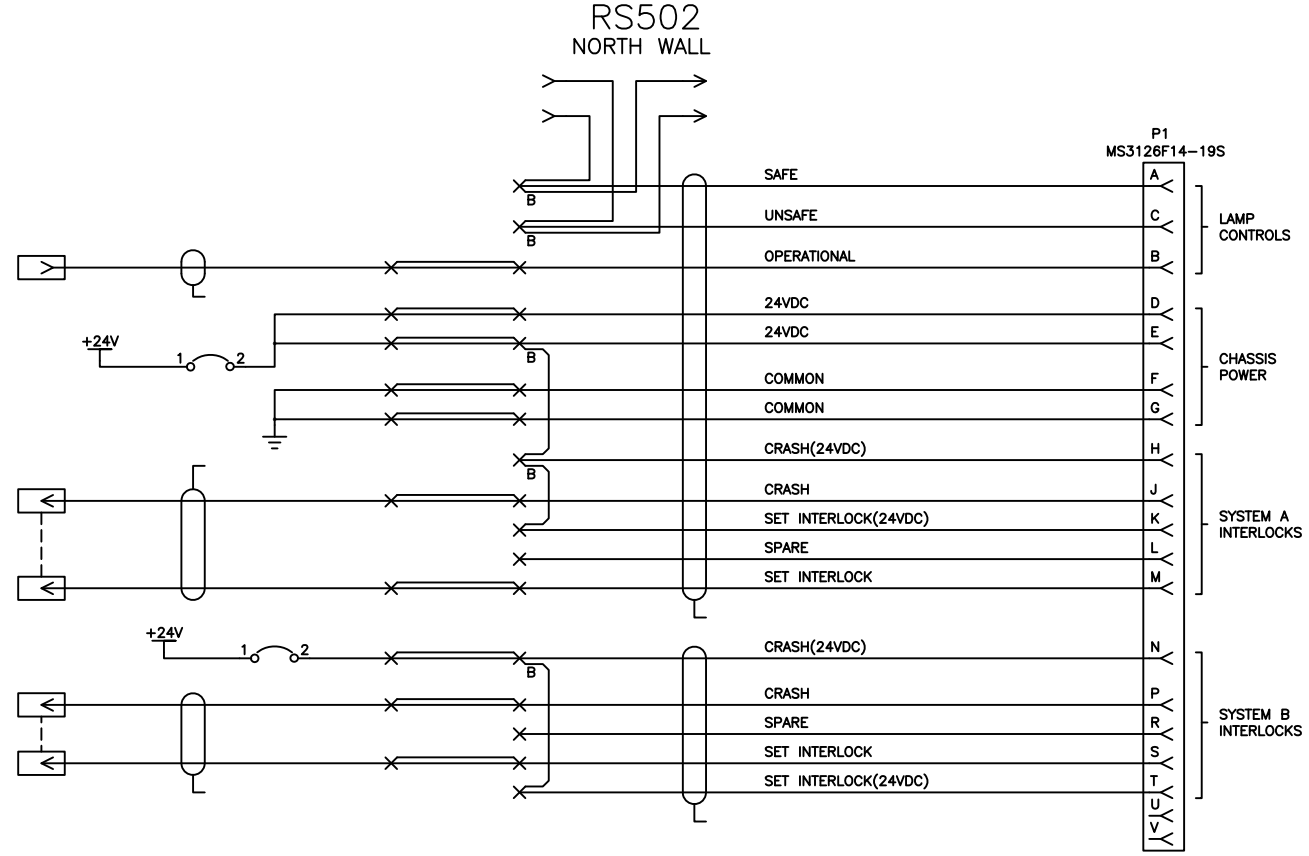

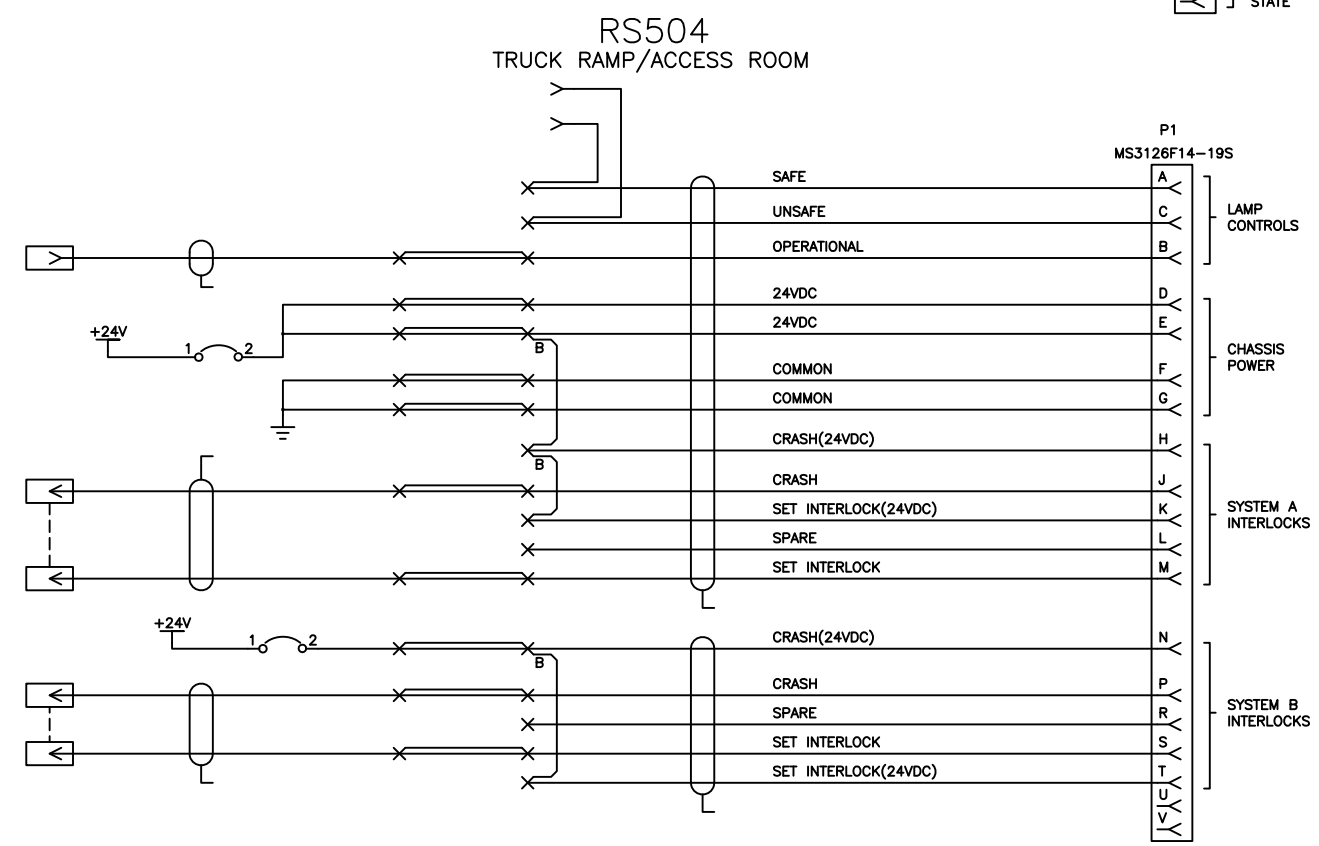

NOTES:

1. FOR LOCATIONS OF RUN/SAFE BOXES SEE JEFFERSON LAB DWG NO. S0500D01.

DRAWN D. WILLIAMS	DATE 03/13/08	Thomas Jefferson National Accelerator Facility, NEWPORT NEWS, VIRGINIA, UNITED STATES DEPARTMENT OF ENERGY
CHECKED	DATE	TITLE PERSONNEL SAFETY SYSTEM TAGGER AREA RUN/SAFE BOX RS501–RS504 WIRING DIAGRAM
APPR/ORIGINATOR	DATE	
APPROVED		
ENGINEER H. ROBERTSON		SIZE D · CAD I.D. NO. \\LABGRP\EECAD\...S0532W1.DWG · DRAWING NO. S0532D01 · REV. —
		SCALE — · SHOWN ON — · SHEET 1 OF 1