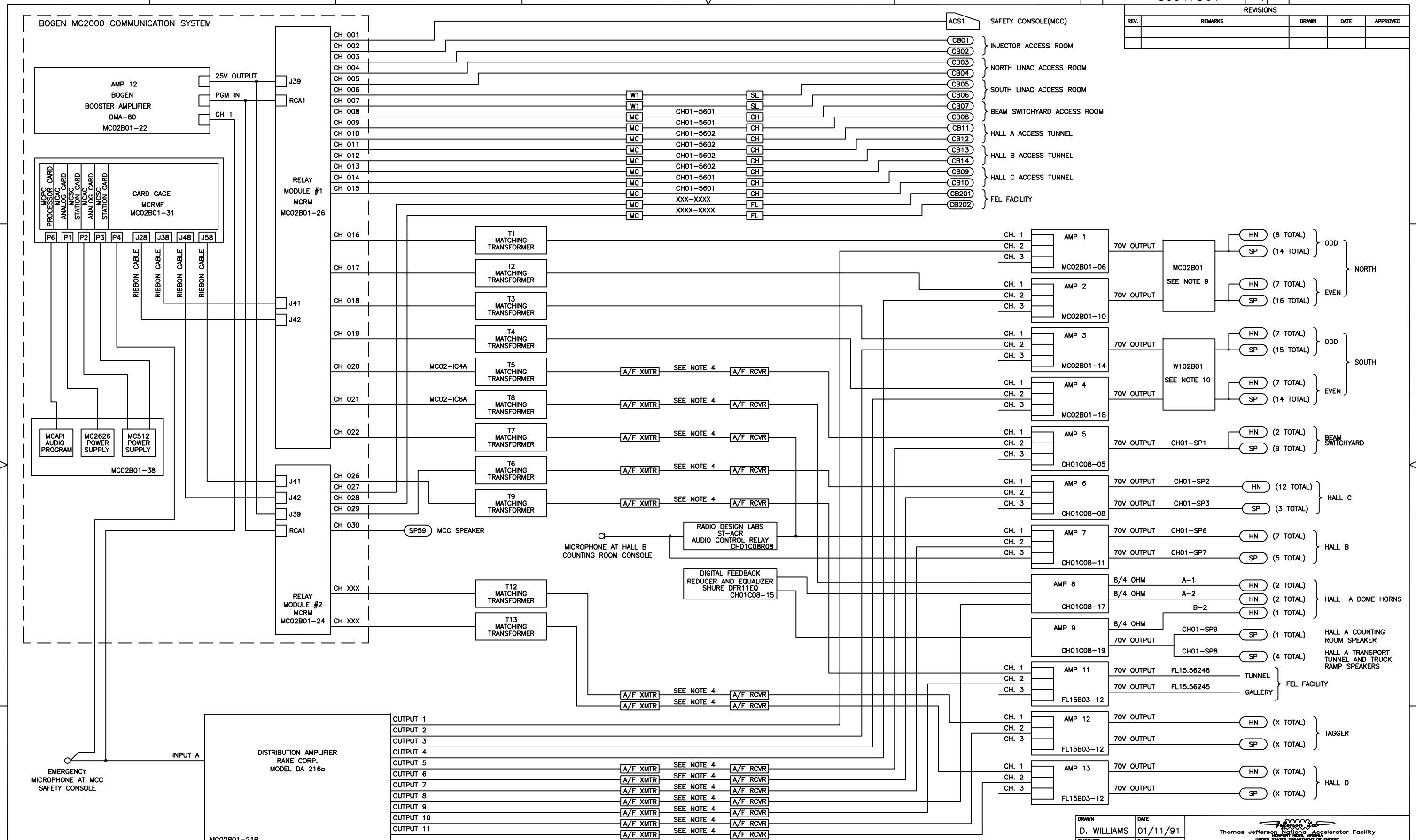

NOTES:

1. FOR MCC EQUIPMENT ROOM RACK LAYOUT SEE JEFFERSON LAB DWG NO. S0013D01.
2. FOR INTERCOM CONTROL PANEL WIRING DIAGRAM SEE JEFFERSON LAB DWG NO. S0059D01.
3. FOR MCC SAFETY CONSOLE LAYOUT SEE JEFFERSON LAB DWG NO. S0045D01.
4. FOR FIBER OPTIC CONNECTIONS SEE JEFFERSON LAB DWG. NO. S0130D01 SH. 2 ZONES 3D AND 4C.

NOTES CONTINUED ON SH. 2

DWG. NO.	SH.	REV.
S0547D01	1	—

REVISIONS

REV.	REMARKS	DRAWN	DATE	APPROVED

DRAWN D. WILLIAMS	DATE 01/11/91	Thomas Jefferson National Accelerator Facility NEWPORT NEWS, VIRGINIA UNITED STATES DEPARTMENT OF ENERGY	
CHECKED	DATE	TITLE PERSONNEL SAFETY SYSTEM 12GeV UPGRADE INTERCOM SYSTEM WIRING DIAGRAM	
APPR/ORIGINATOR	DATE		
APPROVED			
ENGINEER H. ROBERTSON		SIZE D	CAD I.D. NO. \\ALABGRP\EECAD\... S0547W1.DWG
		DRAWING NO. S0547D01	REV. —
		SCALE —	SHOWN ON —
		SHEET 1 OF 9	