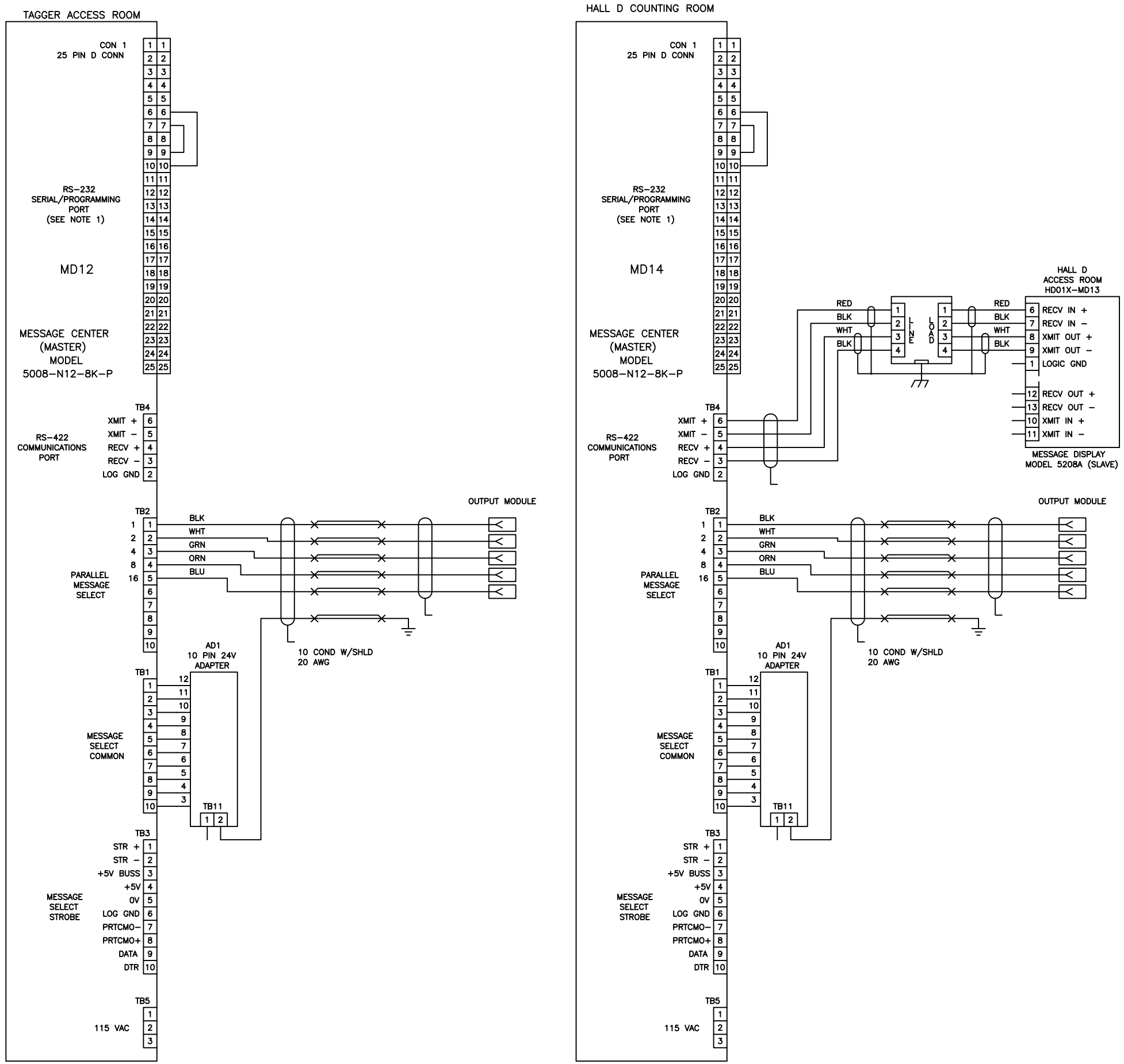

TAGGER AREA AND HALL D SETUP NOTES

NOTES(CONT):

11. 5008 PROGRAM:
    - MESSAGE NO. 3 – BEAM PERMIT
    - MESSAGE NO. 2 – POWER PERMIT
    - MESSAGE NO. 4 – CONTROLLED ACCESS
    - MESSAGE NO. 8 – SWEEP IN PROGRESS
    - MESSAGE NO. 16 – RESTRICTED ACCESS

FOR INFORMATION ON 5008 SET UP OPTIONS AND
5208A SWITCH SET UP SEE NOTES 4 AND 5 ON SHEET 1

PSS 12GeV UPGRADE STATUS DISPLAY SYSTEM
WIRING DIAGRAM

SIZE	CAD I.D. NO.	DRAWING NO.	REV.
D	\\JLABGRP\JEECAD\... S0575W1.DWG	S0575D01	–
SCALE —	SHOWN ON —	SHEET 5 OF 5	