Description of the JLAB Oxygen Monitoring System

H. Robertson

Introduction

The purpose of this system, usually referred to as the ODH System (Oxygen Deficiency Hazard) is to monitor the oxygen level in areas where there is a potential for displacement by other gases normally used for operations. The most commonly used gases at Jefferson Lab are helium, which is light or ceiling-seeking, and nitrogen which is heavier or floor-seeking. When released to atmosphere, these gases, which are typically used in a compressed state, can expand up to 700 - 800 times their liquid volume, therefore, even a small leak may lead to an oxygen-depleted condition in a confined area. Exposure to diminished oxygen levels may cause reduced abilities, unconsciousness, or even death. This system is intended to function as an engineered control to mitigate ODH hazards and enabling staff to work in a safe environment.

The requirement for fixed monitoring in a specific area is determined by its ODH classification. These classifications are the result of risk assessments (as specified in the EH&S Manual) and of controlled spill tests conducted by the Cryogenics and Safety Systems groups. The location of sensors in the tunnels and service buildings is designed to provide complete coverage of the critical areas where compressed gases are used. In addition, passive methods such as vents and lintel barriers are located at the boundaries of these areas.

Oxygen levels are monitored in the Injector, North Linac, South Linac, each experimental hall, and the Free Electron Laser (See Fig.1). Some of these areas are handled by separate electronic systems.

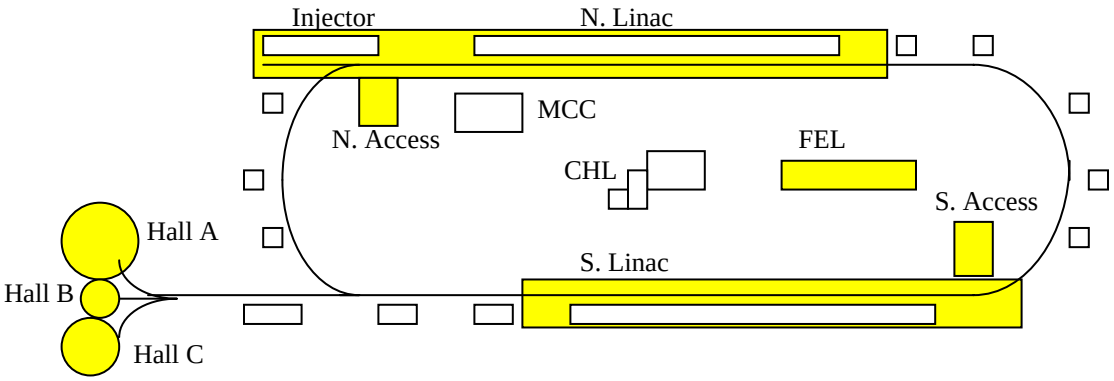

Fig. 1, ODH Areas are shown in yellow.

Although the types of sensors and systems may differ, the indicators to operators and other staff of status and alarms are all standardized (See Fig.2). When a monitor senses that the oxygen level in an area has dropped below **20.0%**, a warning level is indicated by a change in the background color of the sensor's data icon and its multi-colored bar graph from green to yellow. Visual and audible devices in the control room and in the field activate if the oxygen level drops to the **19.5%** Alarm Level or below. In this case the icons' color will change to red. On the PSS console, a flashing blue light and a beeping sonalert indicate an alarm state. In the field, horns and blue beacons for the area in alarm are triggered.

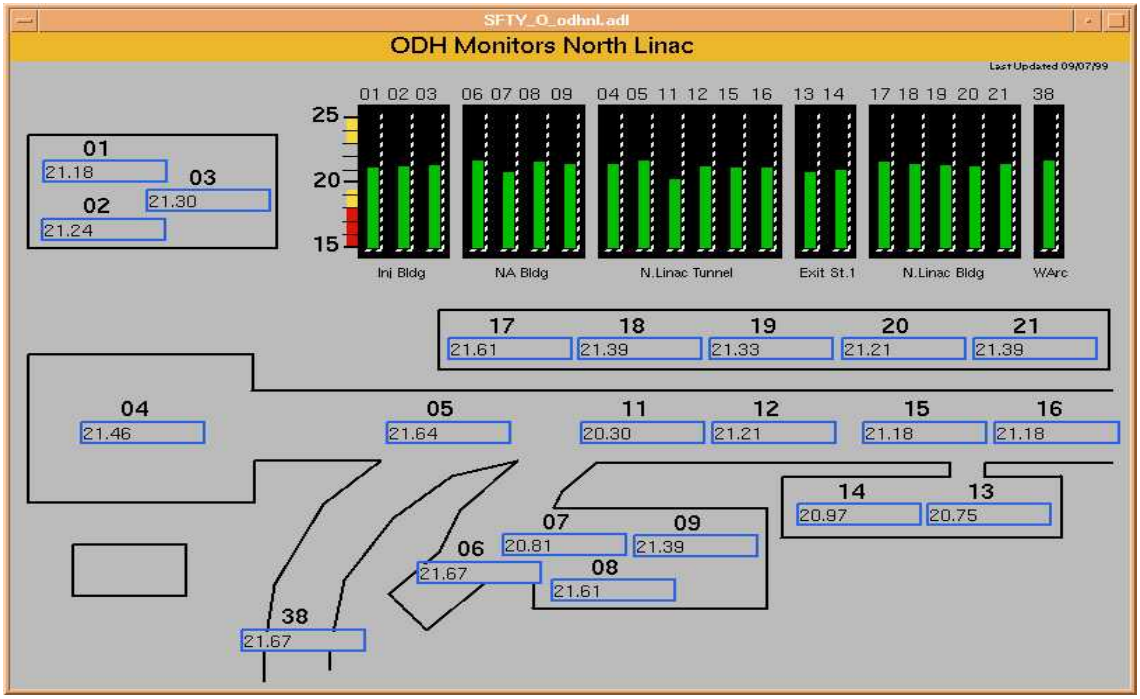

Fig. 2, Typical EPICS ODH Screen

Linac Monitoring System

The controller equipment for the linac monitoring system (See Fig.3) is located in the PSS rack MC02B03 of the MCC. Refer to drawings S00328D01, S0031D01, S0046D01, and S0093D01 for specific locations and wiring diagrams. In the linac tunnels, sensors are installed into the old style housings allowing for easy recognition of these devices by operators and other staff working in the tunnel. The transmitters are located, when possible, in the service buildings above the tunnel areas. This permits the Safety Systems Group staff to calibrate units even when the tunnels are locked for operations, something that has previously not been possible. In order to save resources, these transmitters are designed to take advantage of the installed cabling infrastructure as much as possible. A 24VDC power supply drives the alarm circuits that extend to the field racks. Each field rack has its own 24VDC supply to power the strobe lights and horns for that area.

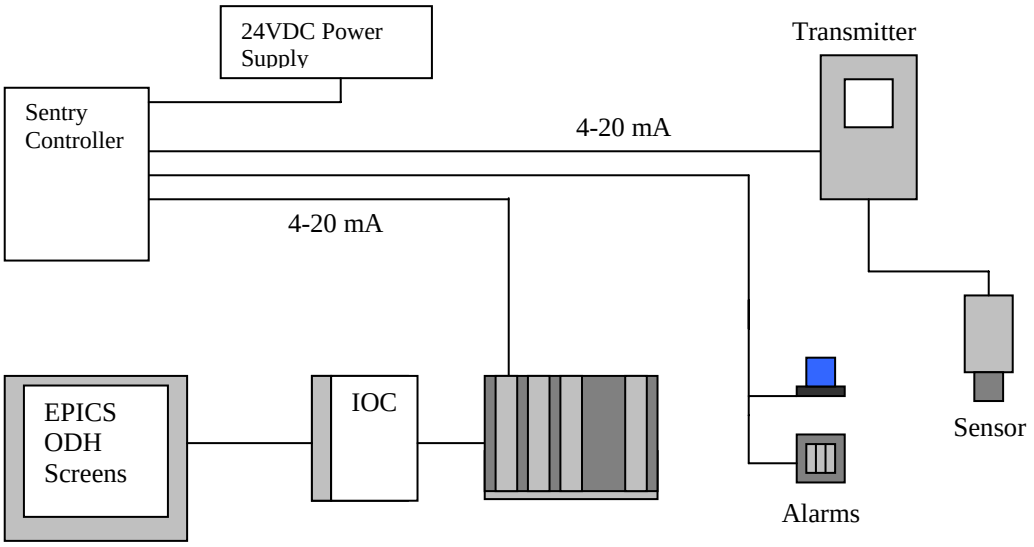

Fig. 3, System Diagram

Controller

The Sentry Controller (5000-8) (See Fig.4) is a microprocessor-based unit capable of managing eight sensor channels plus a host of other features. Up to four controllers (32 channels) can be installed in a rack-mounted frame. For outputs the controller provides system alarms for Warn on low/high O_2, Alarm on low/high O_2, sensor trouble, 4 - 20mA monitoring, and a serial port for digital communications. This device is also used in the monitoring systems for the endstations and the FEL. It scans each channel once a second, detects if a transmitter is present, and displays the sensor number and oxygen level on its two LCD screens. Whenever a channel goes into warn, its associated LED will flash and the right side of the upper display will show "LO". If a channel goes into alarm its associated LED will turn on continuously and the right side of the upper display will show "HI". If a sensor or its cabling is bad the unit will flash the "Trouble" LED.

The "TEST" button provides for a system test and an alarm test (caution, this will energize all field alarms). The "RESET" button allows the user to acknowledge all alarms.

The system is configured with the front panel keypad and the lower display. Scrolling through the menus allows for sensor and alarm configuration. Programming choices includes sensor type, alarm set-points, global calibration, printing, and bypassing sensors that are off-line.

An Output Expansion Module (4314-01) is mounted to the rear of the controller. It adds the ability to alarm separately for each monitor, and provides 4 - 20mA outputs for data logging. These signals are sent to a BIRA 5333 ADC module in rack CH03C05 for logging with EPICS.

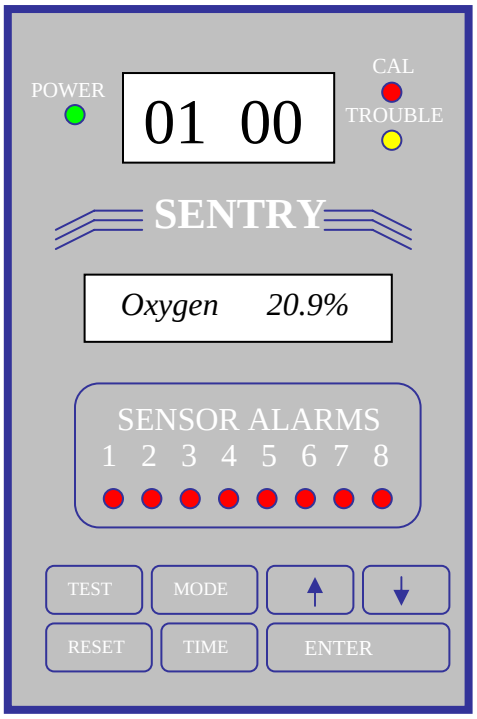

Fig. 4, Sentry Controller 5000-8

Transmitter

The GPR-2500S O_2 Transmitter (See Fig. 5) converts a sensor's mV output to an industry standard 4 - 20mA signal, and has several features that ease the calibration and operation procedures for the SSG and OPS groups. It has selectable ranges, testing, span and zero calibration that are accessible though the front panel keypad and display. It also provides both temperature and barometric compensation for the sensor signal. This unit is set to monitor the O_2 levels from 0% to 25%, +/- .5% FS.

It transmits its processed signal to an ADC module (5100-90) on two wires; meaning that power and signal are on the same pair.
This module is mounted to the rear of the controller. It is capable of converting eight analog 4 - 20mA signals, either 2-wire or 3-wire, to the digital signal required by the controller. It also provides the power to the eight remote transmitters.

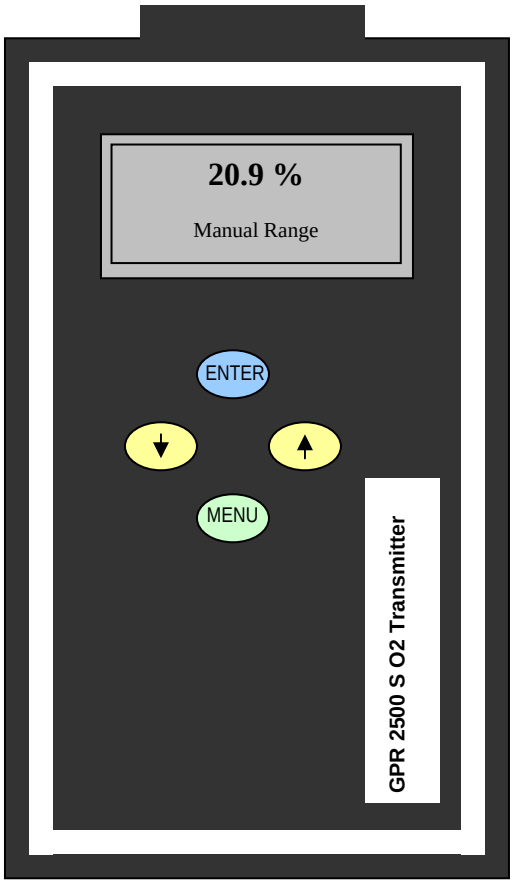

Fig. 5, Oxygen Transmitter

Sensor

The sensor, Analytical Industries' GPR-11-37-4 (See Fig. 6), is fitted into modified mounting hardware so that it can be easily installed and removed from the Bacharach housing.
The sensor design is similar to a battery except that it has an air cathode with a diffusion barrier. This barrier limits the exposure of the metal anode to only hydroxyl ions that will oxidize the anode at a constant rate. The current is proportional to the rate of oxygen consumption by this process, and that is directly related to the amount of oxygen that permeates the diffusion barrier. This is, in turn, proportional to the O_2 concentration and pressure in the ambient atmosphere. A weakness of the typical diaphragm type oxygen cell is its sensitivity to barometric fluctuations. Its strength is that its output is linear in a helium based environment.

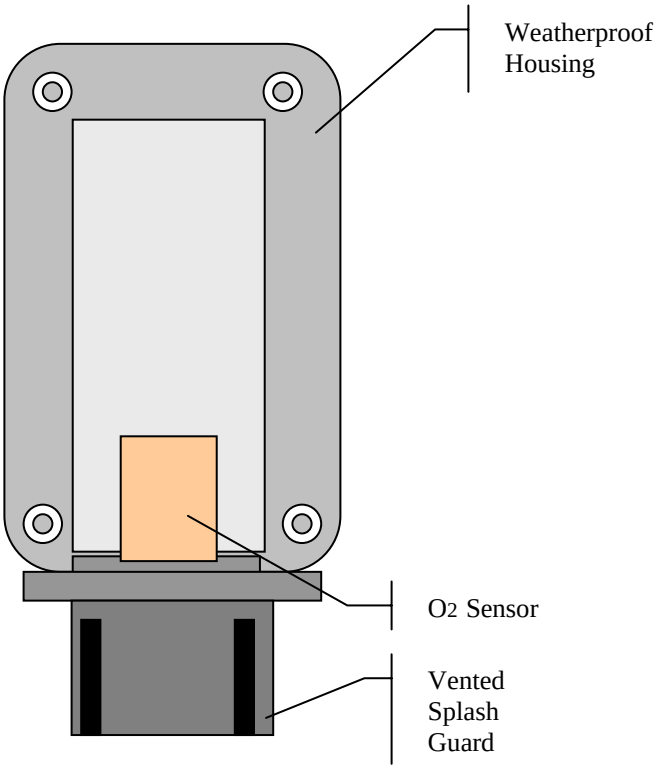

Fig. 6, Oxygen Detection Sensor installed.

Endstation Monitoring System

The electronics for the endstation monitoring system (See Fig.7) are located in the PSS rack CH01C09 on the second floor of the Counting House. Refer to drawings S0046D01, S134D01, S0156D01, S0157D01, S0158D01, and S0159D01 for specific locations and wiring diagrams. Manufactured by Sierra Monitor Corporation, the Sentry Controller (5000-8) is a microprocessor-based unit capable of managing eight sensor channels plus a host of other features. Each endstation has its own controller, alarm, and read-back circuits installed in a rack-mounted frame. For outputs the controllers provide system alarms for warn on low O_2, alarm on low O_2, sensor trouble, and has a serial port for printing or communication. The devices used for alarming in the field are blue strobes and diaphragm-type kaxons operating on 24VDC supplied from the main rack. When a sensor in a particular hall detects low oxygen levels, only the alarms for that hall are triggered.

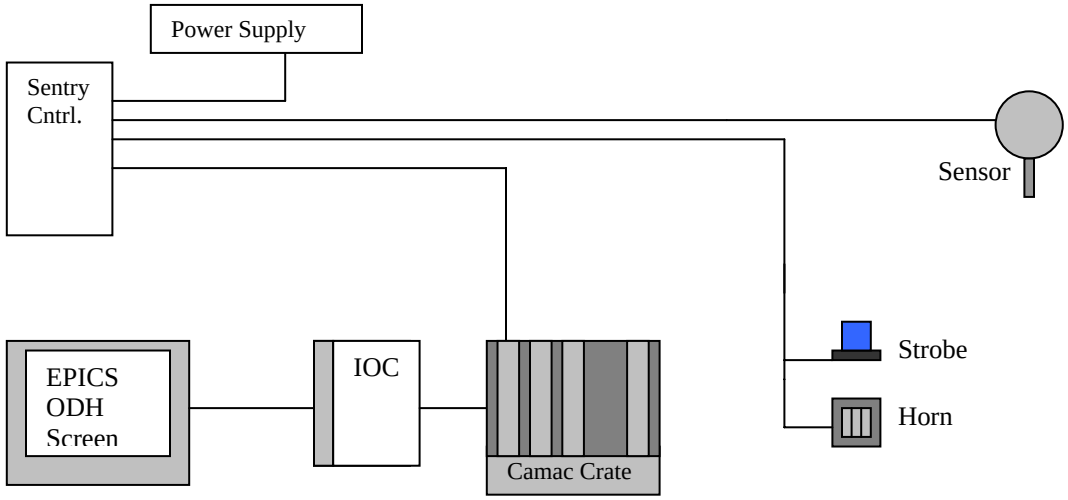

Fig. 7, Endstation System Diagram

In halls A and C, possible oxygen displacement by helium rising to the dome area is monitored by Sample Draw Assemblies (5398-01). These units use a pump to draw air from the dome through 1/4 inch stainless steel tubing to a chamber where a sensor can analyze the oxygen content. A flow-meter is used to observe proper draw rate and a special valve port is included for connection to a calibration tank.

Transmitter/Sensor

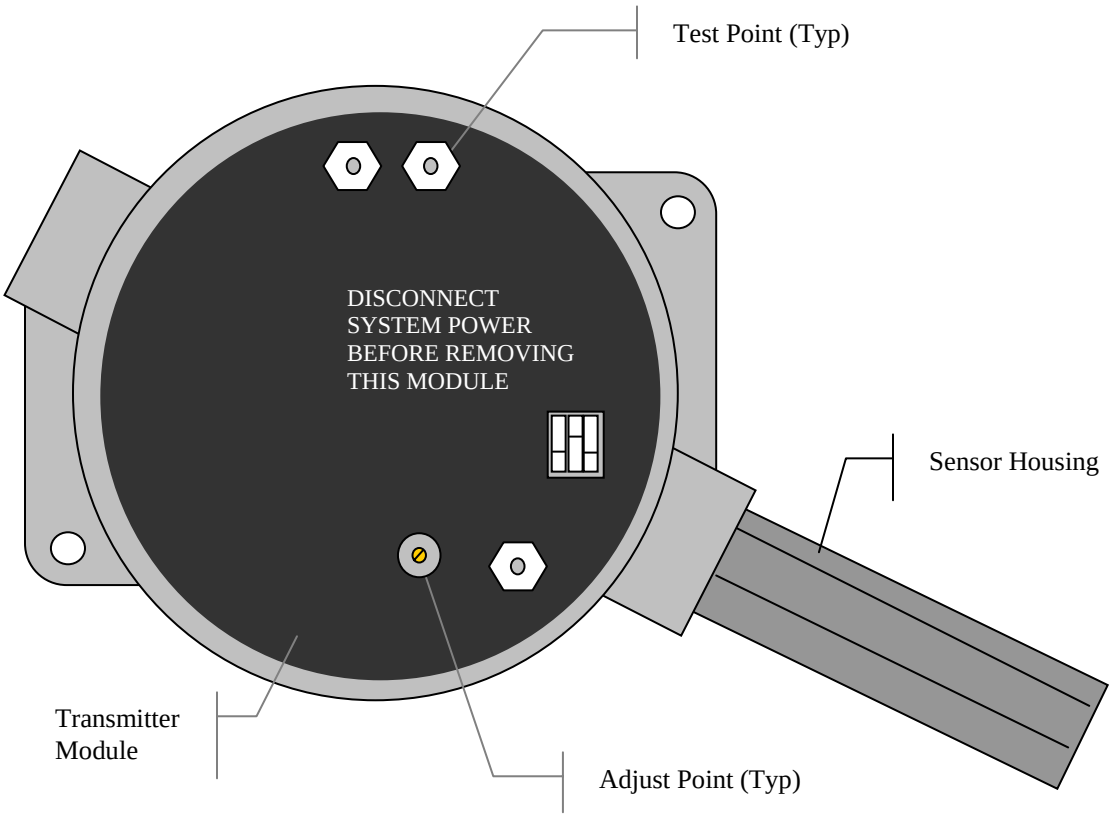

Fig. 9, Transmitter and Sensor Module

The transmitter (See Fig. 9) is enclosed in an explosion proof housing. Field wiring to the transmitter requires a specific three-conductor cable type. Direct current (DC) is carried on two of the wires, while a digital pulsed signal is transferred on the third. This system allows a variety of wiring schemes including multiplexing up to four sensors on one trunk cable by setting unique addresses with a dipswitch. Sensors may be calibrated locally or globally at the controller. The sensor itself works on the same principle as that described for the accelerator system, but is housed in a potted plastic case that threads into the transmitter housing.

FEL Monitoring System

The FEL monitoring system is located in PSS rack FL15B04 at the west end of the FEL Building. Refer to drawings 05309D01and 05310D01 for specific locations and wiring diagrams. This system uses identical controllers, transmitters, and sensors as previously described for the endstation systems. The one exception is that a CAMAC module does not convert the data-logging signal, but is instead processed by a VME ADC module (See Fig. 10).

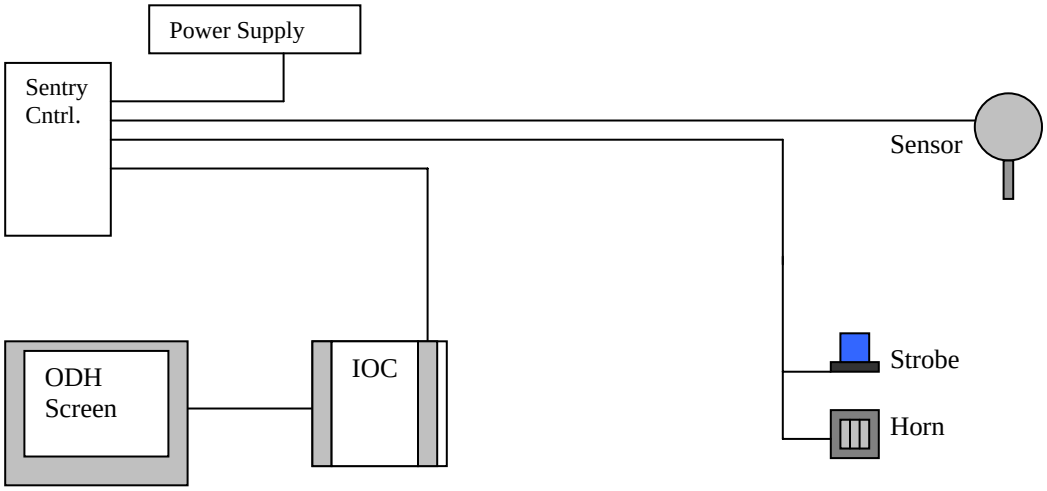

Fig. 10, FEL System Diagram

SENTRY Controller 5000-8 Operating Instructions

"Operate Mode" is the default setting for this system. If changes are made to the calibration or module setup, it must be returned to this mode to start using the new settings.

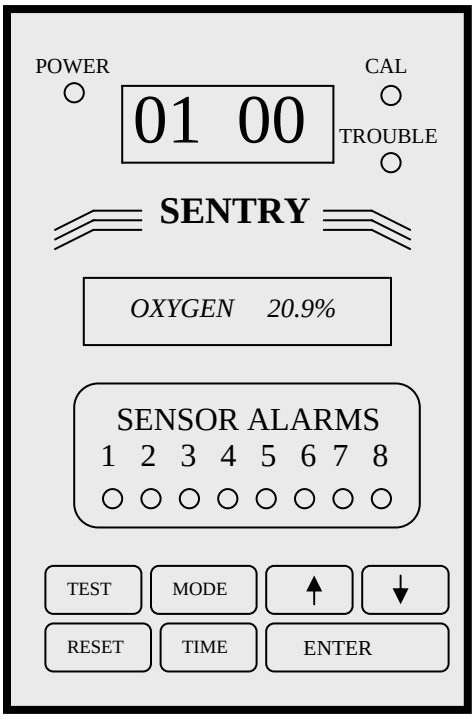

Reset Functions

Alarms:

To shut off the alarms for areas that have been surveyed.

Press RESET once.

Press ENTER once.

All alarms should now be cleared.

System:

To reset **all** system setup parameters.
Make sure this is really what you want to do!

Press RESET twice.

Press ENTER once.

To use the system, new parameters must now be entered.

History:

To clear all historical data (e.g. alarms, calibrations, highest and lowest concentrations).

Press RESET three times.

Press ENTER once.

The history files are now cleared.

Test Function

System:

This test includes the revision number, a passive alarm test, and a full display test.
No strobes or horns will respond during this test.

Press TEST once.

Press ENTER once.

Alarms:

This test includes an active alarm test.
This will set off all strobes and horns! Make sure this is really what you want to do!

Press TEST twice.

Press ENTER once.

Bypassing A Sensor Module

Each controller is labeled for the area that it monitors. If a sensor module is detecting low oxygen (or in need of calibration) a "sensor alarm" light will be flashing for that channel. Before that channel can be bypassed and cleared, the area must first be surveyed to determine the cause or validity of the alarm. If the survey discovers no problem then the procedure below may be followed to bypass that sensor.

Bypass Procedure:

	Action			Small Display
1.	Press	MODE		<CHANGE / CALIB>
2.	Press	ENTER		
3.	Press	MODE	twice.	<CHANGE MODULE>
4.	Press	ENTER		
5.	Select the module using the ↑ or ↓ keys			
6.	Press	ENTER	twice.	<#xx OXYGEN IS: ON>
7.	Press ↓ to disable the module.			<#xx OXYGEN IS: OFF>
8.	Press	ENTER		
9.	Press	MODE	5 times.	<OPERATE MODE>
10.	Press	ENTER		

To shut off the alarms for areas that have been surveyed and bypassed.

Press RESET once.

Press ENTER once.

All alarms should now be cleared.

References

References used for specifying and installing this system are as follows:

Jefferson Lab EH&S Manual Section 6500 - Cryogenic and ODH Safety

29 CFR 1910.134 Personal Protective Equipment - Respiratory Protection

29 CFR 1910.146 General Environmental Controls - Permit-required confined spaces

ANSI/ISA-50.1-1982 (R1992) Compatibility of Analog Signals for Electronic Industrial Process Instruments

EIA/TIA-232-E (RS-232) Interface Between Data Terminal Equipment and Data Communication Equipment Employing Serial Binary Data Interchange

ModBus V1.1 (May 2002) Application Layer Messaging Protocol

ANSI/ISA 92.04.01, Part I-1996 Performance Requirements for Instruments Used to Detect Oxygen-Deficient/Oxygen-Enriched Atmospheres

ISA RP92.04.02, Part II-1996 Installation, Operation & Maintenance of Instruments Used to Detect Oxygen-Deficient/Oxygen-Enriched Atmospheres