# FEL
# Personnel Safety System
# Operator Training

# Table of Contents

**Table of Contents** 2

**Part 1 - System Description** 4

**Safety Interlock System Implementation** 5

**System Design** 6

**What is the PSS?** 7

- **What are the Hazards?** 8
- **Basic PSS function** 12
- **PSS Hazard Mitigation** 13
- **PSS as an Administrative Aid** 14
- **Things Not Covered by the PSS** 15
- **What is the Safety Interlock System?** 16
- **What is PSS Configuration Control?** 17
- **Fail -Safe** 19
- **PLC Equipment** 20
- **PSS Device Interfaces:** 24

**PSS Console in the MCC** 26

**PSS Display** 27

**Beam State Color Code** 31

- Description of PLC screen Icons 32
- **FEL Control Panel in the MCC** 33

**FEL Control Panel in the MCC** _____ **34**

**Access Room** _____ **35**

# Part 1 - System Description

## Safety Interlock System Implementation

The design of the safety interlock system is based upon two complimentary principals:

1.) Keep the hazard away from people.

This is done by the use of “critical devices” which prevent beam from entering an occupied area. Access control ensures that if people enter the tunnel during operations, the beam is immediately shut off.

2.) Keep people away from the hazard.

This is done by ensuring that no one is present in the tunnel prior to running beam. In addition, all doors are locked and then interlocked to the beam operation.

## System Design

The Safety Interlock System design is based on the following criteria:

- Must be fail safe
- Must have 2 independent parallel interlock systems
- Logic implemented in programmable logic controllers where possible
- Each interlock system and function must be separately auditable

There are about 20 other criteria listed in TN95-028

## What is the PSS?

The Personnel Safety System is a system of sensors, interlocks, and warning devices that are designed to protect personnel from exposure to prompt radiation, electrocution, and oxygen deficiency hazards that may be present during accelerator operations. The Personnel Safety System also includes non-safety interlock systems such as the accelerator and FEL public address systems, used to announce changes in tunnel states.

## *What are the Hazards?*

The PSS is designed to provide a measure of protection (mitigation) against exposure to the following hazards that can be present during accelerator operation:

Prompt ionizing radiation dose rates in excess of 1 Mrad/hr caused by beam loss.

RF cavity field emission[1] prompt ionizing radiation dose rates in excess of 4 krad/hr.

Electromagnetic prompt non-ionizing radiation in excess of 30 mW/cm$^2$ caused by open or missing RF waveguide.

Exposed Gun High voltage (≥100 kV) components in the tunnel.

Exposed electrical leads on arc magnets that may have over 800 V and 600 amps.

Oxygen deficient atmosphere (≤ 19.5 % $O_2$) caused by cryogenic leak or rupture or gas leak into a confined space.

[1] Field Emission is the radiation produced by electrons stripped from the cavity surface bombarding the cavity walls.

## OK. So what are the prompt radiation, electrical, and oxygen deficiency hazards?

**Prompt radiation** requires an external energy source to occur. The PSS can shut off a prompt radiation source by shutting off the energy to the device generating the radiation. Prompt radiation at Jefferson Lab comes in two forms:

Ionizing radiation has enough energy to change the chemical properties of matter it encounters. The electron beam is the primary source of prompt ionizing radiation in the accelerators. Secondary prompt ionizing radiation is generated by the operation of the superconducting RF cavities.

Non-ionizing radiation does not have enough energy to change matter but can cause damage through heating. The primary form of non-ionizing radiation in the accelerator is the high power RF microwave energy used to accelerate the electron beam.

**Electrical (electrocution) Hazards** are present when the large dipole magnets, which bend the beam from one section of the accelerator to another, are powered. The electrical connections to these magnets are not covered and so are exposed to workers in the tunnel. The PSS can shut off the power supplies to these magnets when there is a potential for personnel to be in the tunnel. The terminals of any high voltage magnets not interfaced to the PSS are covered and a red beacon flashes when the magnets are powered.
The high voltage used in the Injector to produce the electron beam can also be an electrocution hazard.

**ODH** hazards are not normally present when the accelerator is operating. However the potential for a gas or cryogenic spill is great enough to warrant a system that monitors the oxygen level in and around where these gases are used. The ODH alarm system does not shut off the source of the gas but alerts personnel to evacuate an area.

## *Accelerator devices that have a PSS interface*

- Electron Gun or "the gun":

**Produces the electron beam**
The FEL electron gun operates between 300 and 500 kV. The electron beam produced by these guns is the primary source of prompt ionizing radiation in the accelerators.

- RF High Power Amplifier (RF HPA)

**Transfers energy to the beam**
Transfers 1497 MHz RF power to the electron beam via a waveguide transmission line and accelerating RF cavity.
The FEL has up to 6 HPAs powering 25 8kW cavities and two 100 kW cavities.

- Cathode Power Supply (CPS)

**Powers the RF HPAs**
Provides up to 12 kV of D.C. voltage to the RF HPAs. Each HPA has one cathode power supply.

- Magnet Box Supply

**Powers the large arc dipole**s
Operate at up to 800 V and 600 amps. Magnets are required to bend beam from one area to another.

## *Basic PSS function*

None of these hazards are significant outside of the tunnel, so one function of the PSS is to maintain the tunnel as an "exclusion area" during beam operations, i.e. people are excluded from the tunnel when these devices are operable.

Conversely, the PSS will not allow the Gun, RF HPA, or Magnet Box supplies to operate when people could possibly be in the tunnel.  In this mode the tunnel is an "occupied area".

## *PSS Hazard Mitigation*

The PSS automatically acts to protect personnel against the following hazards:

- Personnel entry into an exclusion area
- Excessive radiation dose rate in an occupied area.
- Operation of radiation producing devices while an area is occupied.
- Exposure to high power RF EMI.
- Electrical shock from powered arc dipoles.
- Beam current in excess of the FEL safety envelope.

## *PSS as an Administrative Aid*

The PSS logic helps the SSO and personnel around the accelerator conduct some administrative operations…

- Tunnel sweep sequence
- Tunnel Controlled Access
- PSS emergency crash switches
- Voice announcements
- Audio/visual status and warning indicators.
- Automated door locks
- ODH alarms

## *Things Not Covered by the PSS*

The PSS does not protect against:

- Exposure to residual radiation due to activation.
- Electrical shock hazards other than from the operation of the large arc dipole magnets.
- Protection of the general public from radiation doses less than that for trained Jefferson Lab radiation workers.
- Beam damage to non-PSS equipment.
- Damage to Beam Dumps.
- Beam Loss.
- Malicious intent to defeat or circumvent the PSS.
- Explosive gas hazards.
- Exposure to cryogen hazards.
- Exposure to Laser Hazards.

## *What is the Safety Interlock System?*

- The CEBAF Safety Interlock System is the part of the PSS designed to ensure that personnel are not exposed to prompt radiation exceeding the CEBAF administrative limits. This is accomplished by maintaining “exclusion” areas for accelerator operations.

- It includes the tunnel door switches, equipment interlocks, radiation monitors, Run/Safe boxes, PSS console equipment, and the programmable logic controller system.

- It is composed of two independent parallel systems, labeled System - A and System - B. If either one of the systems senses an unsafe condition it will turn off the electron gun and any other potentially hazardous device the PSS has control over.

- If an exclusion area is violated, such as if a tunnel entrance door is opened, the interlock system will immediately shut off the beam and any other device that could present a prompt radiation or shock hazard.

## *What is PSS Configuration Control?*

Because of the critical nature of the Personnel Safety System, strict controls over changes to the system are maintained. The Jefferson Lab PSS Configuration Control Policy outlines the requirements for making changes or repairs to any part of the system.

PSS equipment, hardware and software are categorized by the severity or criticality of the subsystem or equipment. There are five categories, or levels, with 5 being the most critical and 0 the least critical.

Most Safety Interlock Systems fall within level 4 or 5. Administrative subsystems such as the ODH and PA systems fall within levels 2 or 3. Level 0 and 1 equipment is for PSS group use only. An example of a level 1 device is one of the PSS test stands.

All level 2-5 systems are audited twice a year to certify functionality.

Example of PSS configuration control sticker. These are mounted on all PSS equipment and wiring conduit.

Example of PSS Critical Device control sticker. These are mounted on PSS accelerator equipment such as beam stoppers.

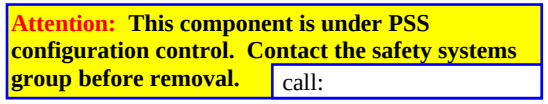


PSS Configuration Control sticker. This is mounted on the PSS controlled circuits of non-PSS equipment. An example would be a safety interlock system controlled relay inside an HPA.

## *Fail -Safe*

The concept of Fail-Safe is very important in understanding PSS operation and troubleshooting. The PSS should always be deterministic - i.e. it should never wind up in an ambiguous state. The system is designed such that a sensor must be energized to indicate a “safe” state and a control must be energized to permit an “unsafe” state. The de-energized position for a sensor is assumed to be “unsafe.”

This is an extension of the concept of passive protection. Passive is interpreted as no energy input required for the safety function. In the PSS we require that no energy (electrical or mechanical) be required to reach the “safe” state.

## *PLC Equipment*

Programmable Logic Controllers (PLCs)

The Personnel Safety System uses Programmable Logic Controllers to emulate relay logic.

Each PSS Segment contains two independent PLC systems (A and B). Each controller has a set of input/out modules. Additional I/O modules may be remotely controlled by the PLC to expand the I/O capability of the system. The PSS system has over 2000 inputs and outputs.

Two independent programmers who do not share information on implementation and algorithms program the PLCs. Each person writes the program to conform to a general functional specification of how the logic system should behave.

All the PLCs are networked using the Modbus Plus token ring protocol. The PSS console display uses the network to monitor status of each area. No critical information, e.g. interlock logic, is transferred over the network.

| PLC System* | Master Drop Location | Remote Drop Locations |
|---|---|---|
| North Linac | MCC Equipment Room | North Access Service Building<br>North Linac Service Building<br>East Arc Service Building #2<br>South Access Service Building |
| Injector | Injector Service Building | Counting House 2nd floor |
| South Linac | South Access Service Building | South Linac<br>West Arc Service Building #2 |
| Beam Switch Yard | BSY Service Building 4 | BSY Service Building #4 |
| Hall A | Counting House 2nd floor | None |
| Hall B | Counting House 2nd floor | None |
| Hall C | Counting House 2nd floor | None |
| MCC (one PLC only) | MCC Equipment Room | Counting House 2nd floor |
| FEL | MCC Equipment Room | FEL Telecommunications room |

* 2 PLCs (system A and system B) at each location unless otherwise noted.

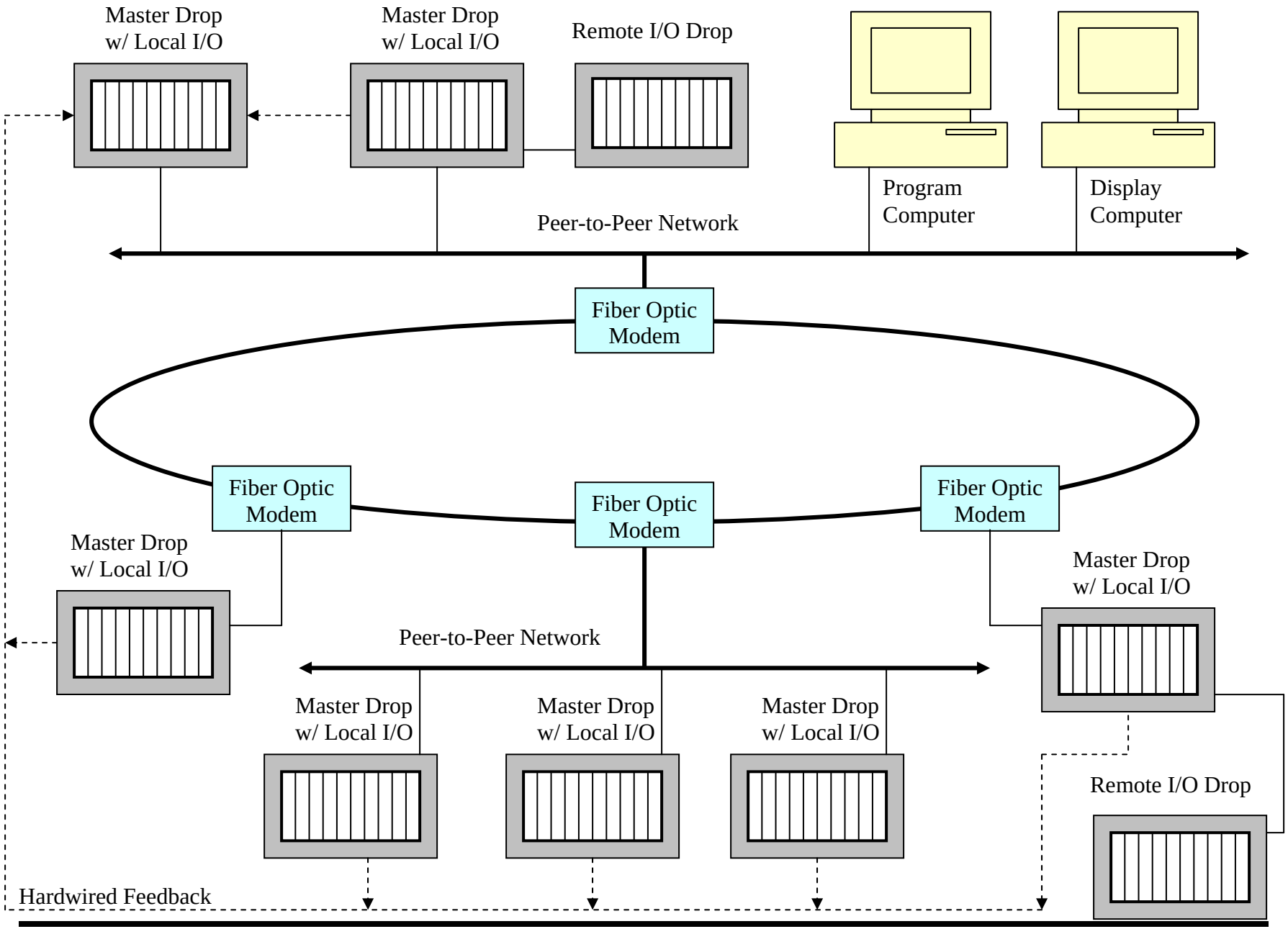
Master Drop
w/ Local I/O
Master Drop
w/ Local I/O
Remote I/O Drop
Program
Computer
Display
Computer
Peer-to-Peer Network
Fiber Optic
Modem
Fiber Optic
Modem
Fiber Optic
Modem
Fiber Optic
Modem
Master Drop
w/ Local I/O
Master Drop
w/ Local I/O
Peer-to-Peer Network
Master Drop
w/ Local I/O
Master Drop
w/ Local I/O
Master Drop
w/ Local I/O
Remote I/O Drop
Hardwired Feedback

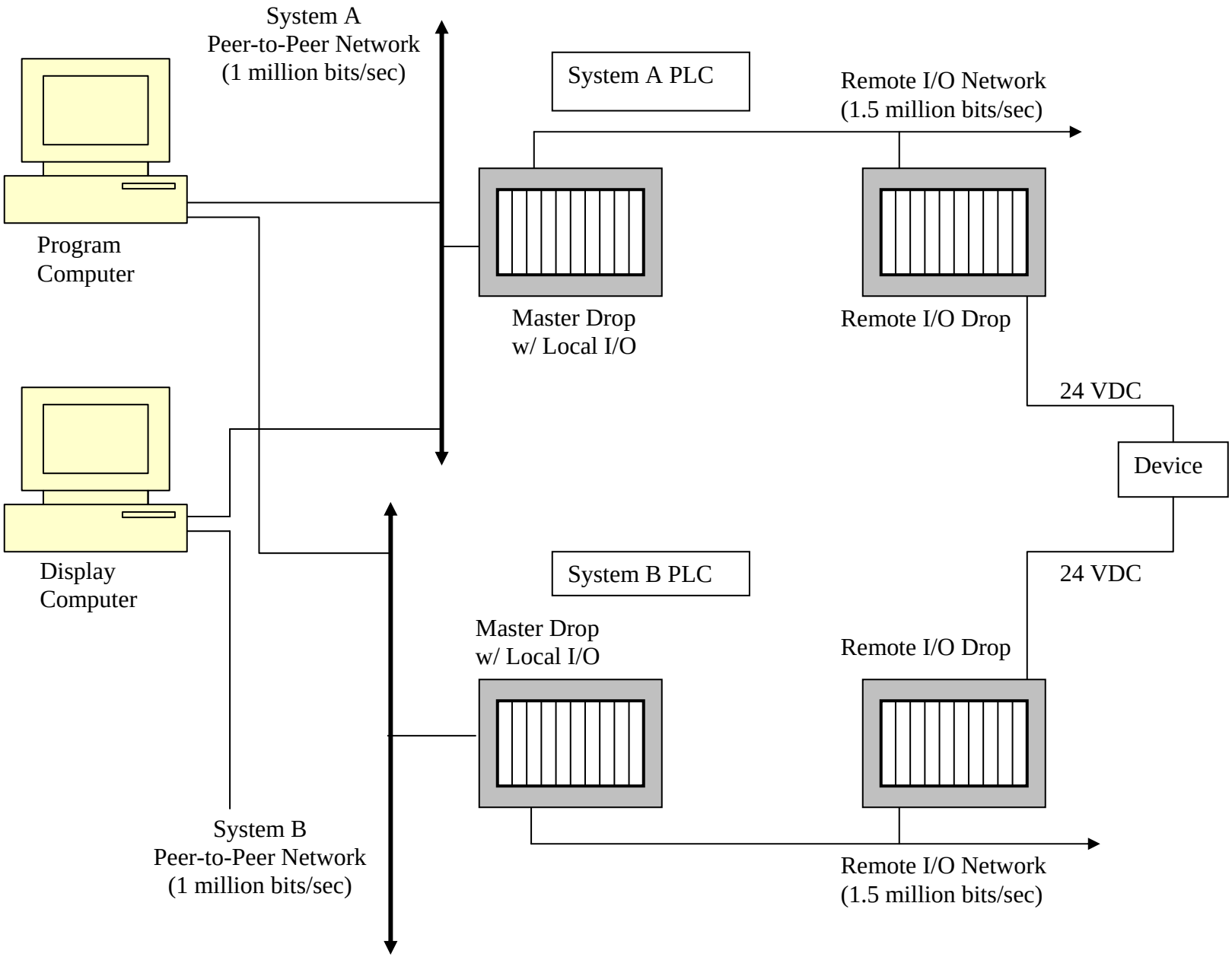
System A
Peer-to-Peer Network
(1 million bits/sec)
System A PLC
Remote I/O Network
(1.5 million bits/sec)
Program
Computer
Master Drop
w/ Local I/O
Remote I/O Drop
24 VDC
Device
Display
Computer
System B PLC
24 VDC
Master Drop
w/ Local I/O
Remote I/O Drop
System B
Peer-to-Peer Network
(1 million bits/sec)
Remote I/O Network
(1.5 million bits/sec)

## *PSS Device Interfaces:*

Several high power devices are interlocked through the personnel safety system. The two major types of components are the RF high power amplifiers (HPAs) and the arc dipole magnet power supplies (box supplies).

All connections between these devices and the PSS are isolated through an interface chassis. The interface chassis contains a set of relays that isolate the power and ground of the PSS and the device.

Standard interface signals between the PSS and other devices are:

**Permit** Output from the PSS to the device that enables the device to turn on high voltage. The permits from system A and system B are typically wired in series at the main on/off control line for the power supply.

**Off/Safe** Contact closure in the power supply that indicates if the device is on or off. Off/Safe is used by the PSS to verify that the power supply is off before allowing controlled access.

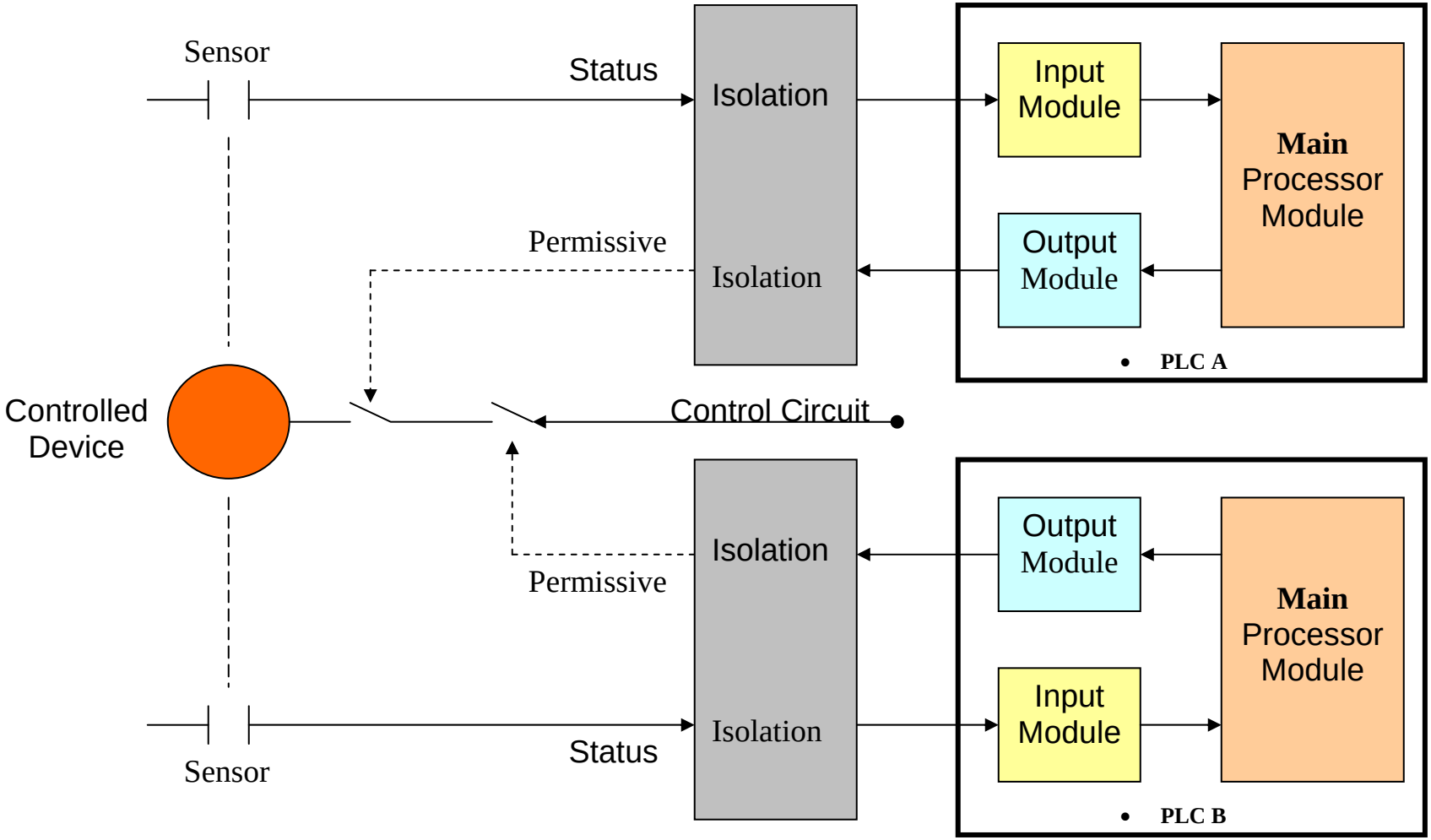


**Sensor output must be +24 V to indicate safe.**
**PLC output must be +24 V to energize the controlled device.**
**Isolation is provided by relays, opto-couplers, or both.**

## PSS Console in the MCC

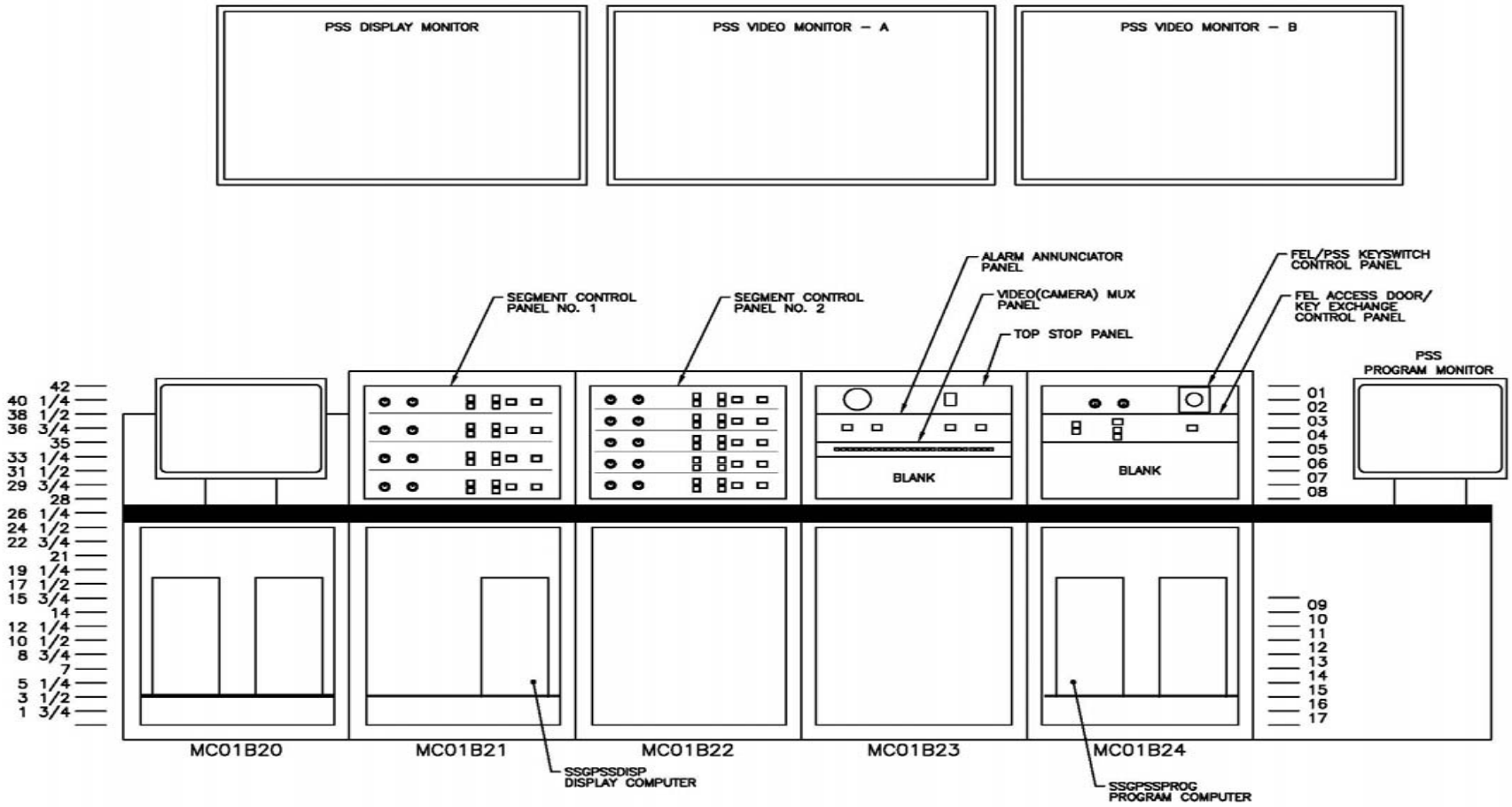

## PSS Display

The PSS display computer shows the state and status of the PLC interlocks of each PSS segment. Areas on the site map may be selected with the mouse to bring up the status of a given segment. The FEL is shown as an outline of the FEL building on the right side of the site map.

There are 3 types of display screens used in the operation of the PSS:

1. **"Overview" screen** - shows the status of each tunnel segment on the accelerator site. Any other screen may be accessed from this screen.

2. **"PLC" screen** - shows the status of each of the PSS devices.

3. **"SSI" (Safety System Interface) screen** - shows the status of the Gun, Magnet supplies, and the RF CPSs.

All FEL interlocks are shown on one screen.

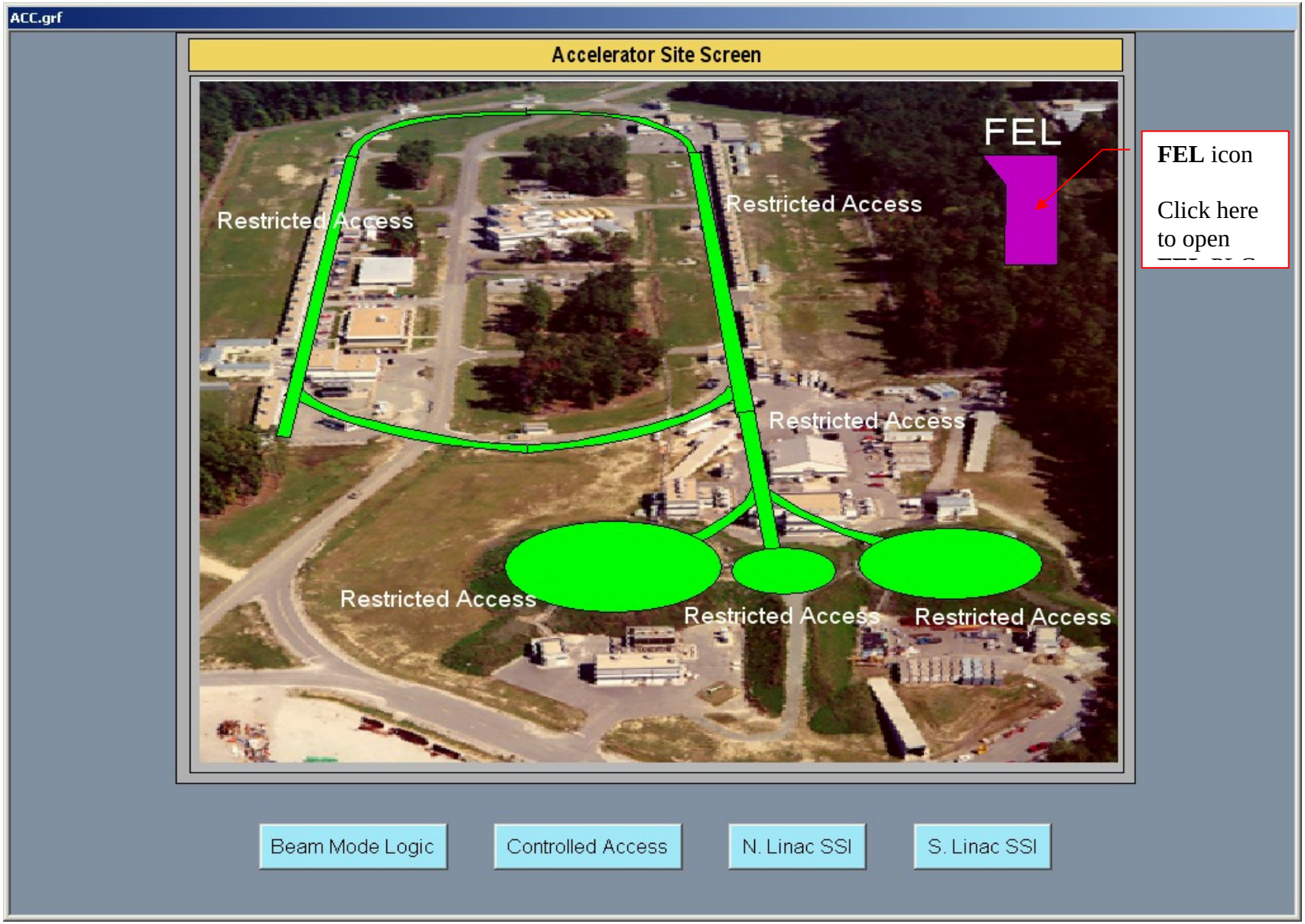


**FEL** icon

Click here to open

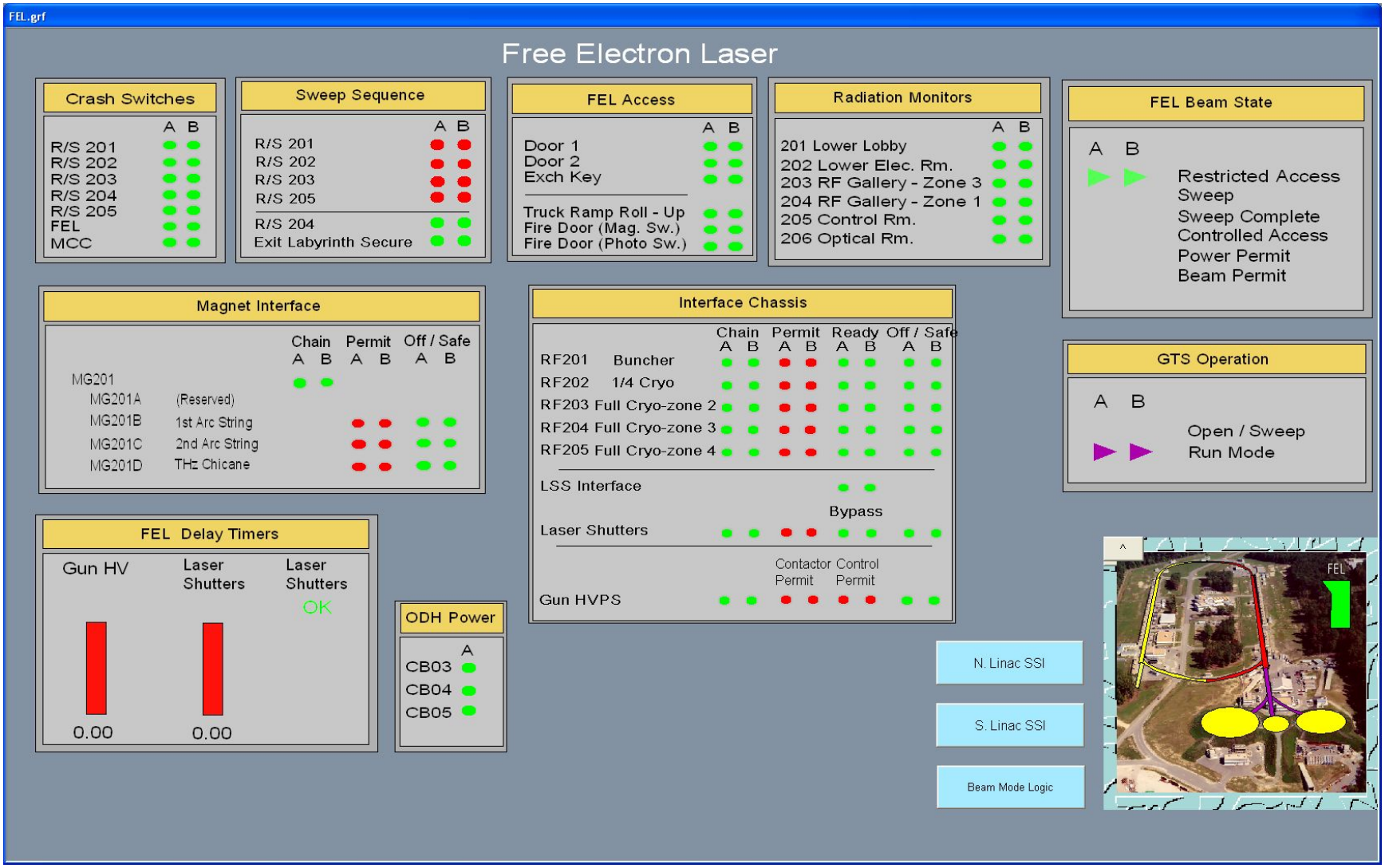
FEL.grf
Free Electron Laser
Crash Switches
A B
R/S 201
R/S 202
R/S 203
R/S 204
R/S 205
FEL
MCC
Sweep Sequence
A B
R/S 201
R/S 202
R/S 203
R/S 205
R/S 204
Exit Labyrinth Secure
FEL Access
A B
Door 1
Door 2
Exch Key
Truck Ramp Roll - Up
Fire Door (Mag. Sw.)
Fire Door (Photo Sw.)
Radiation Monitors
A B
201 Lower Lobby
202 Lower Elec. Rm.
203 RF Gallery - Zone 3
204 RF Gallery - Zone 1
205 Control Rm.
206 Optical Rm.
FEL Beam State
A B
Restricted Access
Sweep
Sweep Complete
Controlled Access
Power Permit
Beam Permit
Magnet Interface
Chain Permit Off / Safe
A B A B A B
MG201
MG201A (Reserved)
MG201B 1st Arc String
MG201C 2nd Arc String
MG201D THz Chicane
Interface Chassis
Chain Permit Ready Off / Safe
A B A B A B A B
RF201 Buncher
RF202 1/4 Cryo
RF203 Full Cryo-zone 2
RF204 Full Cryo-zone 3
RF205 Full Cryo-zone 4
LSS Interface
Bypass
Laser Shutters
Contactor Permit
Control Permit
Gun HVPS
GTS Operation
A B
Open / Sweep
Run Mode
FEL Delay Timers
Gun HV
Laser Shutters
Laser Shutters
OK
0.00
0.00
ODH Power
A
CB03
CB04
CB05
N. Linac SSI
S. Linac SSI
Beam Mode Logic
FEL

The status of each PSS input is shown on the PLC screen. Inputs are grouped by function. The PSS system A and System B inputs are shown separately as a circular icon.

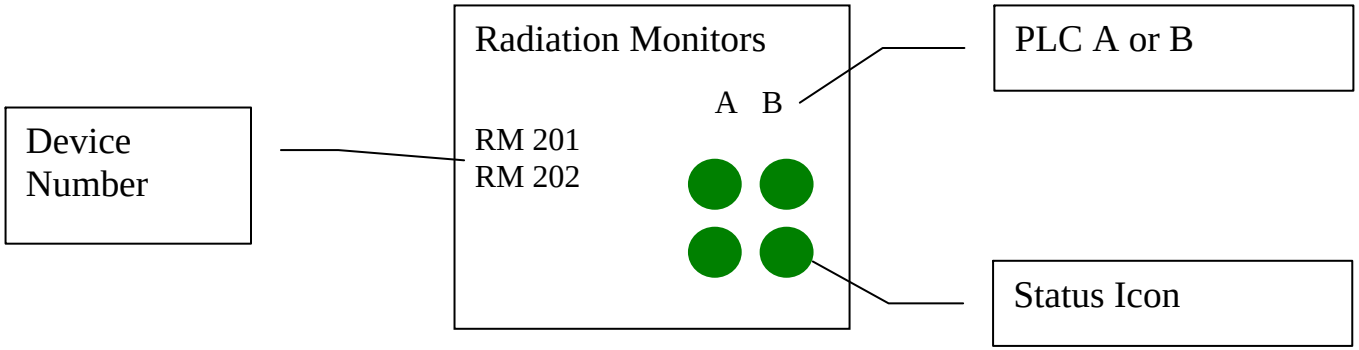


Generally speaking:
A GREEN icon means the device is in the TRUE condition.
A RED icon means the device is in the FALSE condition.

During normal operation of the PSS system most of the icons should be GREEN. The "Off/Safe" icons may be RED only when the PSS is in "Power Permit" or "Beam Permit" modes and a high voltage power supply is turned on.

When the PSS system faults to a lower access state, the status of the PLC inputs are latched. Any PLC inputs which are "faulted" at the time the system latches are displayed on the PLC screen as "First Faults."

The first fault shows up on the display screen as a blue ring around the input status icon.
The latched first fault stays on until the PSS is switched to another access mode.

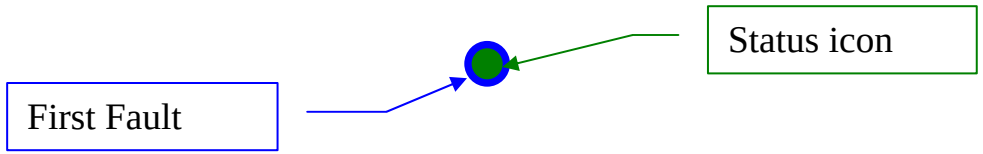

## Beam State Color Code

| | |
|---|---|
| Restricted Access | **Green** |
| Sweep, Sweep Complete, & Controlled Access | **Yellow** |
| Power Permit | **Red** |
| Beam Permit | **Magenta** |

### Description of PLC screen Icons

| *Type of Signal* | *Description* | *What Green Means* | *What Red Means* | *What First Fault means* |
|---|---|---|---|---|
| Sweep Sequence | Shows "operational" status of each Run/Safe box in the order of the sweep pattern. | Box is armed | Box is not armed. Sweep Required. | No first fault on this signal. |
| Crash Switches | Shows the status of each crash switch. Includes control room crash switches. | Switch is not crashed. | Switch is crashed. Should be in "Restricted Access" | Indicates that this switch was pushed when the system crashed. |
| Radiation Monitors | Shows fault status of each CARM. | CARM is OK. | CARM is in alarm state. | CARM dropped System to Power Permit. |
| OFF/Safe | Shows on/off status of device that gets a permissive from PSS. Includes HV power supplies and laser shutter. | Device is OFF or Closed. | Device is ON. | This device was on when system dropped to lower state. |
| Chain (Intact) | Shows status of connection between PLC and field interface chassis. | Connection OK | Chassis disconnected. | This device dropped PSS to "Restricted Access." |
| Ready | Shows status of RF HPA Waveguide Pressure switch. | Pressure OK | Waveguide is not pressurized. Could be open. | Waveguide Pressure dropped system to "Power Permit." |
| Bypass | Shows status of Drive Laser Shutter bypass switch. | Shutter Not Bypassed. | Shutter Bypassed. Cannot switch to Beam Permit. | Shutter Bypass dropped system to "Power Permit." |
| Doors | Shows Open/Closed status of doors | Door Closed | Door Open | Open Door caused system to drop to "Restricted Access." |
| Master Exchange Key | Shows if the Master Exchange Key is in or out of master slot. | Master Exchange Key is IN. | Master Exchange Key is OUT. Cannot switch to "Power Permit". | Master Exchange key was OUT when the system dropped. |

## *FEL Control Panel in the MCC*

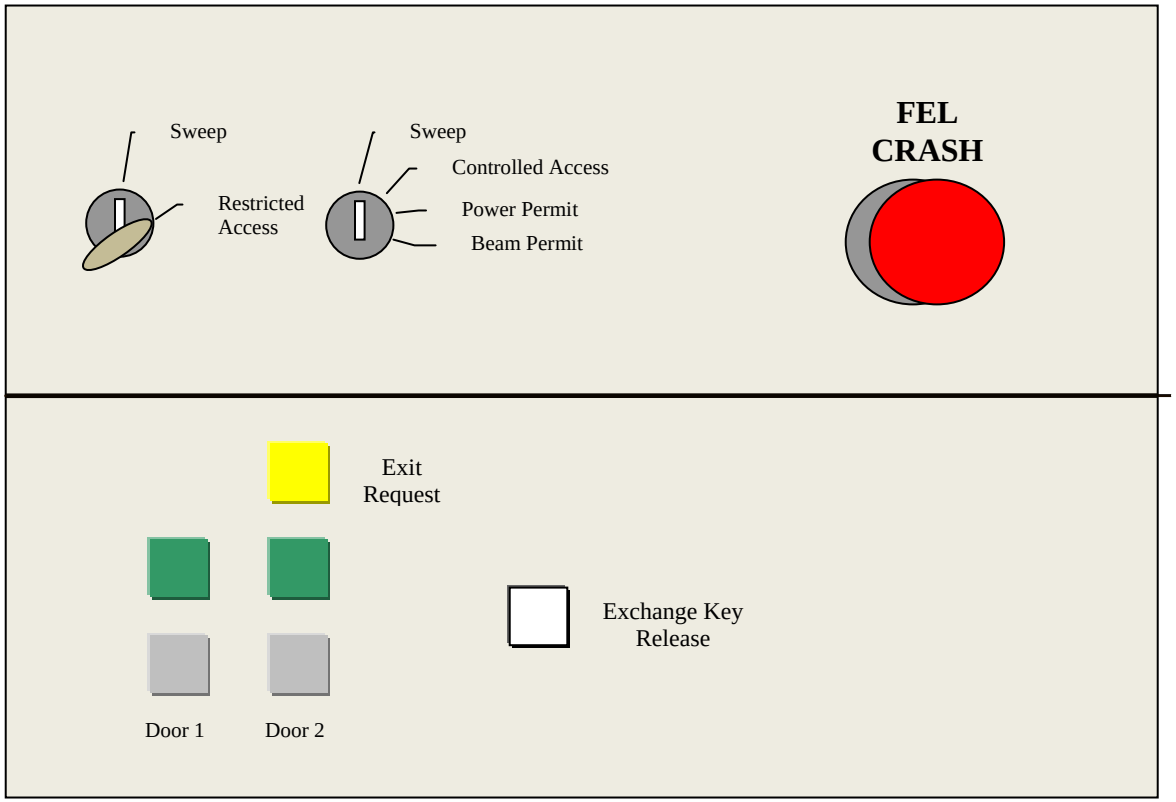

## *FEL Control Panel in the MCC*

- The Mode Control Key can only be removed in the “Sweep” position
- Both doors are automatically locked in “Power Permit” and “Beam Permit” modes.
- Door 2 remains automatically locked until the Master Exchange Key is removed.
- Any other time the door locks are under manual control.
- Flashing door lock status means that the door may be closed, but is not locked.
- The “Exit Request” lamp will flash until door 2 is unlocked.
- The Master Exchange Key release only works in “Controlled Access” mode.

## *Access Room*

The access room is designed so that the SSO can "hold" personnel between the doors until all processing in or out of the tunnel is complete.

All access areas have 2 magnetically locked doors. During an access, the door locks may be manually controlled by the SSO. When the tunnel is switched to "Power Permit" the access room doors are automatically locked.

The access room also contains a controlled access exchange key bank and a phone used to contact the SSO.

A message display over the outer door gives the current status of the tunnel.

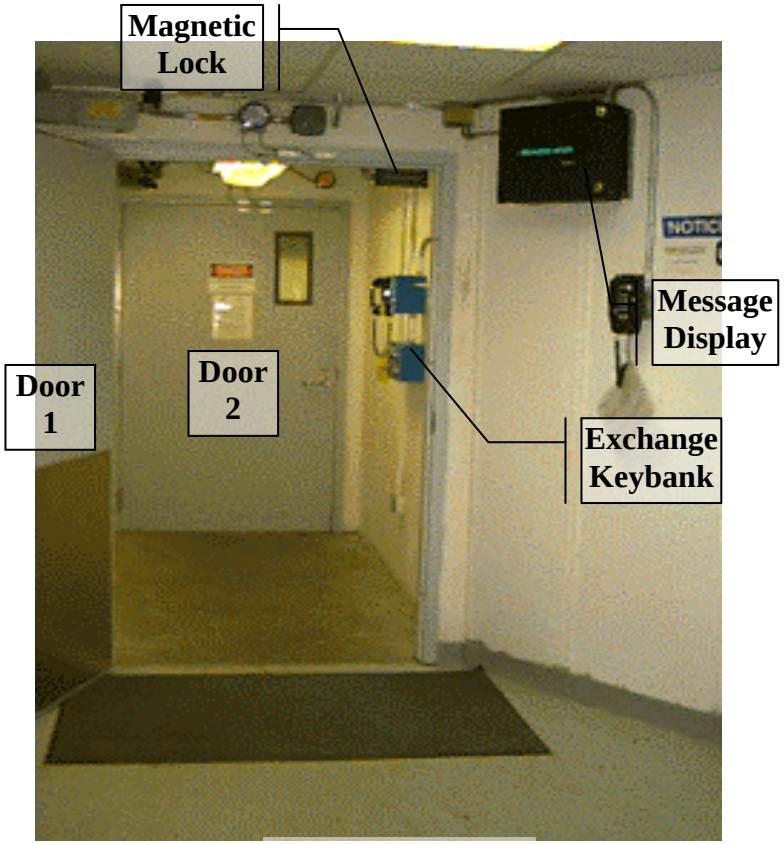


**Access Room**