Personnel Safety System

Operator Training

Table of Contents

Table of Contents 2
Part 1b System Description 4
Safety Interlock System Implementation 5
System Design 6
Critical Devices 7
CEBAF Critical Devices: 8
Beam Stoppers 9
Protection Devices 10
Arc Transfer Switch 11
PLC Equipment 14
PSS Device Interfaces: 16
PSS Device Interfaces: 17
PSS Device Interfaces: 18
PSS Device Interfaces: 19
Devices Interlocked through the PSS 20
Devices Interlocked through the PSS 21
Tunnel Access States: 23
Restricted Access 23
Sweep 24

Controlled Access 25

Power Permit 26

Beam Permit 28

The Gun Permit Modes are: 29

PSS Internal States 30

Sweep Complete 30

Critical Device Configuration 31

Restricted Access - Lock Down 31

Access Control: 32

Access vs. Exit Doors 32

Exit Doors and Tunnel Gates 33

Access Room 34

Part 1b System Description

Safety Interlock System Implementation

The design of the safety interlock system is based upon two complimentary principals:

1.) Keep the hazard away from people.
This is done by the use of "critical devices" which prevent beam from entering an occupied area. Access control ensures that if people enter the tunnel after it is swept, the beam is immediately shut off.

2.) Keep People away from the hazard.
This is done by ensuring that no people are present in the tunnel prior to running beam. In addition, all doors are locked and then interlocked to the beam operation.

System Design

The Safety Interlock System design is based on the following criteria:

- Must be fail safe
- Must have 2 independent parallel interlock systems
- Logic implemented in programmable logic controllers where possible
- Fast logic implemented by dedicated electronics.
- Each interlock system and function must be separately auditable

There are about 20 other criteria listed in TN95-028

Critical Devices

- Critical Devices are devices explicitly used to ensure that beam does not inadvertently enter an occupied area.

- Between each PSS segment that can be occupied and a PSS segment that can have beam present there are at least three Critical Devices.

  - At least one of the Critical Devices is control over a bending magnet string which could direct beam into an occupied area. When its permit is removed, beam will go straight into the tunnel walls. (i.e. Arc dipoles)

  - At least one of the Critical Devices is an insertable beam block in the beam line leading between segments. When its permit is removed, it inserts and blocks all incoming beam. (i.e. Beam Stoppers)

CEBAF Critical Devices:

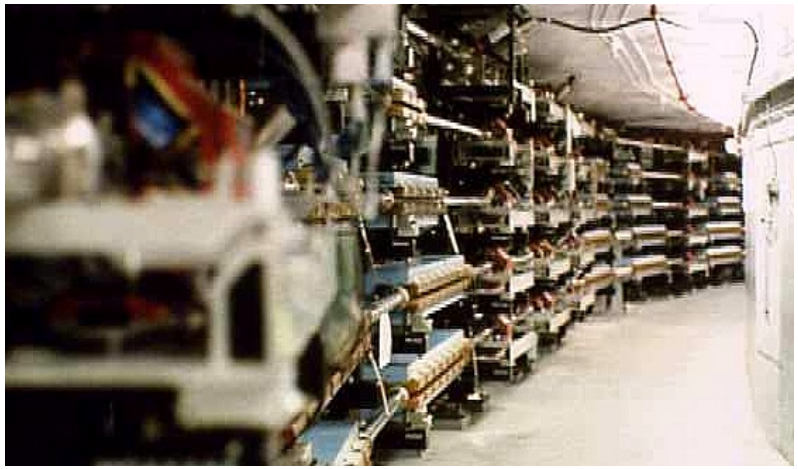

- Between North and South Linac:

  1 Beam Stopper
  1 In Line Dump
  1 Control Over Magnet Power Supply (Permit)

- Between the BSY and Each Experimental Endstation

  2 Beam Stoppers in each transport line
  1 Control Over Each Arc Magnet Power Supply between BSY and Endstation.

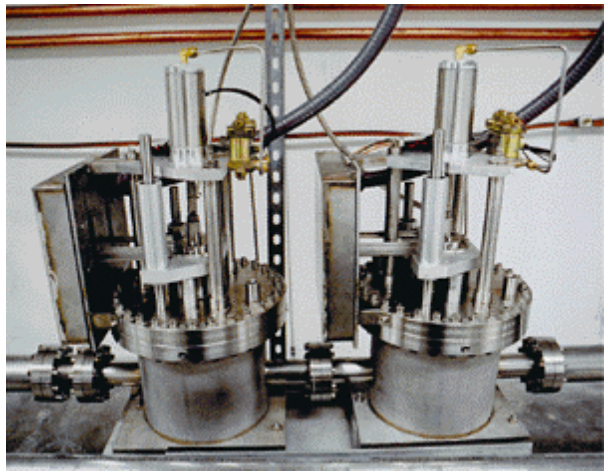

Beam current monitors and beam diffusers protect the integrity of the beam stoppers. Beam current monitors detect errant beam. Beam diffusers extend the survival time of the beam stoppers to several seconds.

Beam Stoppers

Beam stoppers are composed of 70 kg copper slugs with an internal gas chamber.

A beam stopper may only be removed if there is a permissive from both the segment containing the stopper AND the segment immediately downstream of the stopper.

Normal in/out control of the stopper is done through the EPICS control system.

Protection Devices

Devices that protect Critical Devices are treated as Critical Devices themselves.

- Each Beam Stopper is protected by a Beam Current Monitor System
- Beam diffusers disperse the beam's density on the face of the copper slug to increase the survival time of the BSY beam stoppers.

Arc Transfer Switch

There are two positions to the arc transfer switch, “Recirculate”, and “Straight Ahead Mode.” The Arc Transfer switch may be operated remotely from EPICS, or locally from the control panel in the South Access equipment room.

The Arc Transfer Switch is no longer used as a Critical Device by the PSS and should remain in its "Full Arc" or Recirculate position at all times.

Electron Gun as a Critical Device

- The means by which the PSS shuts off the electron beam are also treated as Critical Devices. These means must have a “Permit” signal from the PSS System in order to turn on.
- There are both fast and slow ways the PSS turns off the gun.
- Fast methods include clamping the modulation control to the guns, and controlling in-line shutters.
- An additional fast method, used only for beam stopper protection, is to deflect the beam onto a water-cooled aperture (A2); i.e. the Kicker system.
- The slow means is by removing the high voltage source from the gun cathode.

Note: EPICS looks at the modulation status, the PSS looks at the shutter and power supply status.

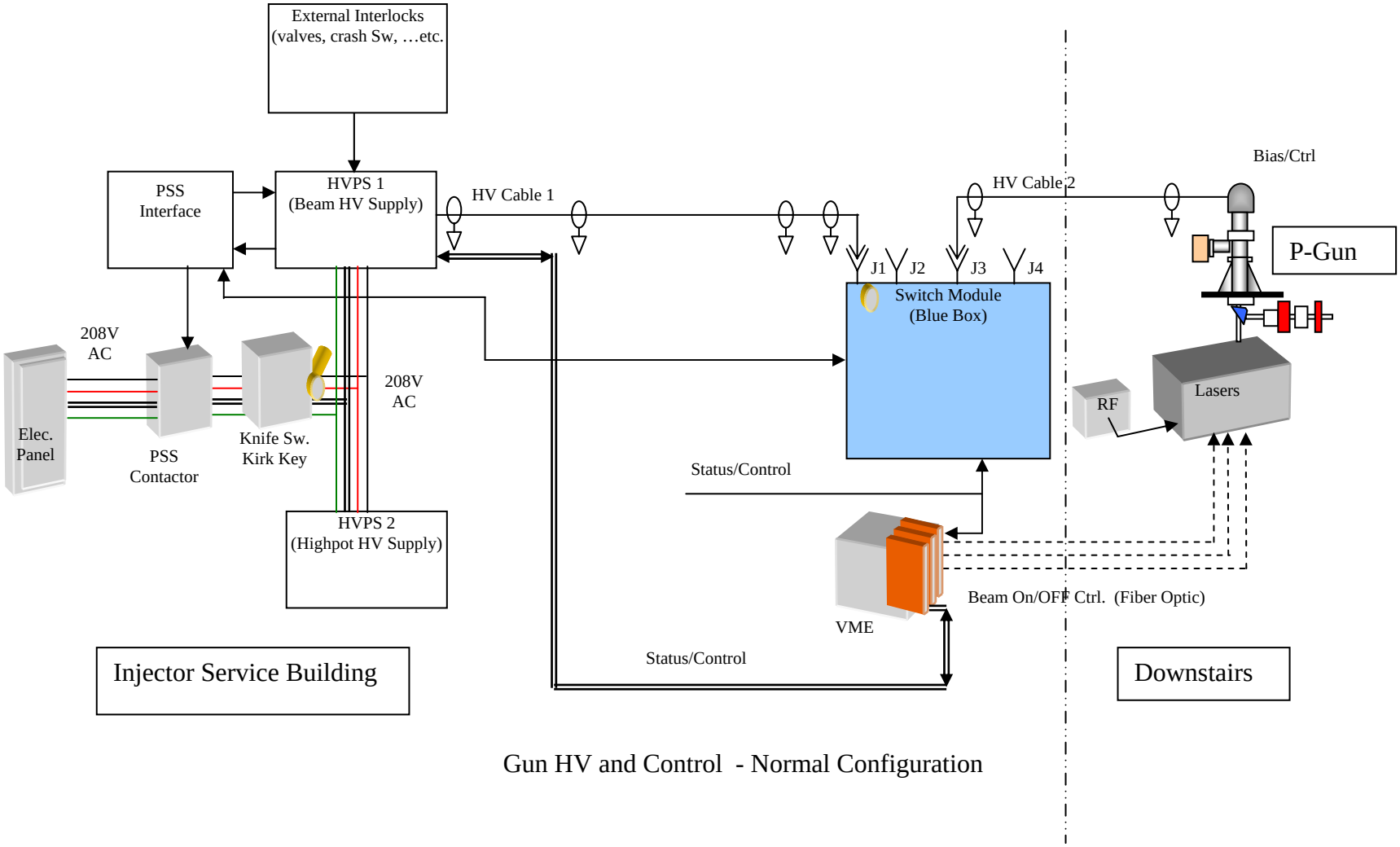

Gun HV and Control - Normal Configuration

PLC Equipment

Programmable Logic Controllers (PLCs)

The Personnel Safety System uses Programmable Logic Controllers to emulate relay logic.

Each PSS Segment contains two independent PLC systems (A and B). Each controller has a set of input/out modules. Additional I/O modules may be remotely controlled by the PLC to expand the I/O capability of the system. The PSS system has over 2000 inputs and outputs.

Two independent programmers who do not share information on implementation and algorithms program the PLCs. Each person writes the program to conform to a general functional specification of how the logic system should behave.

All the PLCs are networked using the Modbus Plus token ring protocol. The PSS console display uses the network to monitor status of each area. No critical information, e.g. interlock logic, is transferred over the network.

PLC System*	Master Drop Location	Remote Drop Locations
North Linac	MCC Equipment Room	North Access Service Building North Linac Service Building East Arc Service Building #2 South Access Service Building
Injector	Injector Service Building	Counting House 2nd floor
South Linac	South Access Service Building	South Linac West Arc Service Building #2
Beam Switch Yard	BSY Service Building 4	BSY Service Building #4
Hall A	Counting House 2nd floor	None
Hall B	Counting House 2nd floor	None
Hall C	Counting House 2nd floor	None
MCC (one PLC only)	MCC Equipment Room	Counting House 2nd floor
FEL	MCC Equipment Room	FEL Telecommunications room

* 2 PLCs (system A and system B) at each location unless otherwise noted.

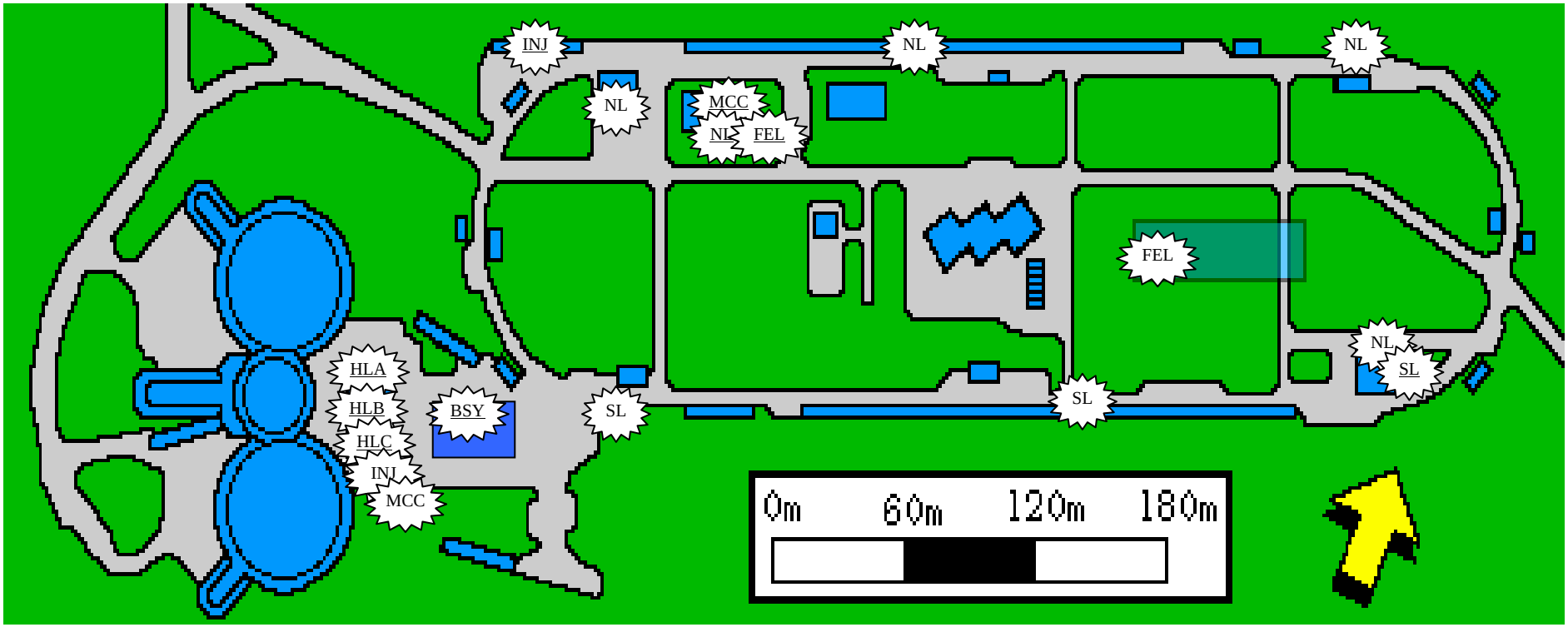

PLC Drop Locations.

Underlined drops represent master drops.

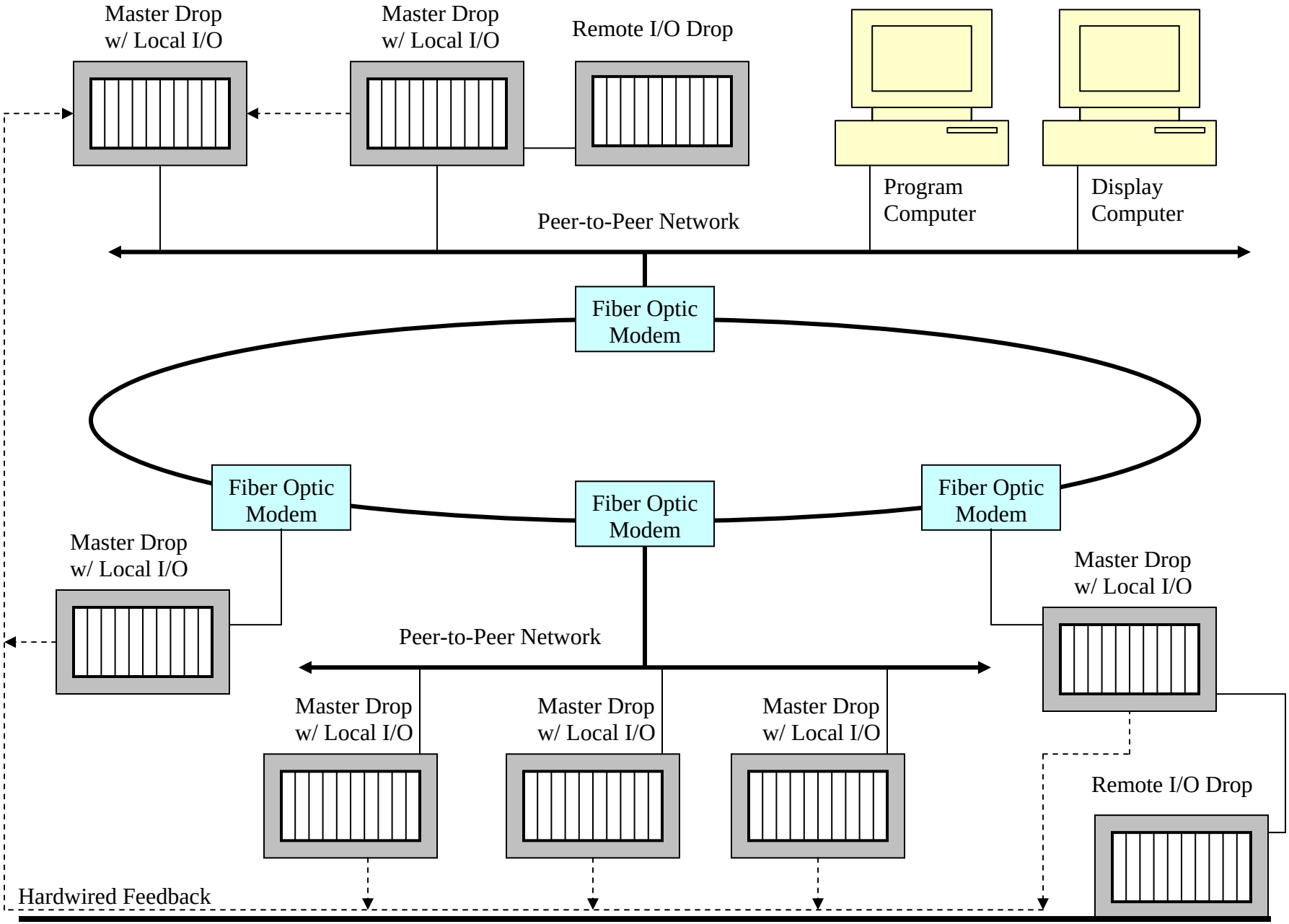
Master Drop
w/ Local I/O
Master Drop
w/ Local I/O
Remote I/O Drop
Program
Computer
Display
Computer
Peer-to-Peer Network
Fiber Optic
Modem
Fiber Optic
Modem
Fiber Optic
Modem
Fiber Optic
Modem
Master Drop
w/ Local I/O
Master Drop
w/ Local I/O
Peer-to-Peer Network
Master Drop
w/ Local I/O
Master Drop
w/ Local I/O
Master Drop
w/ Local I/O
Remote I/O Drop
Hardwired Feedback

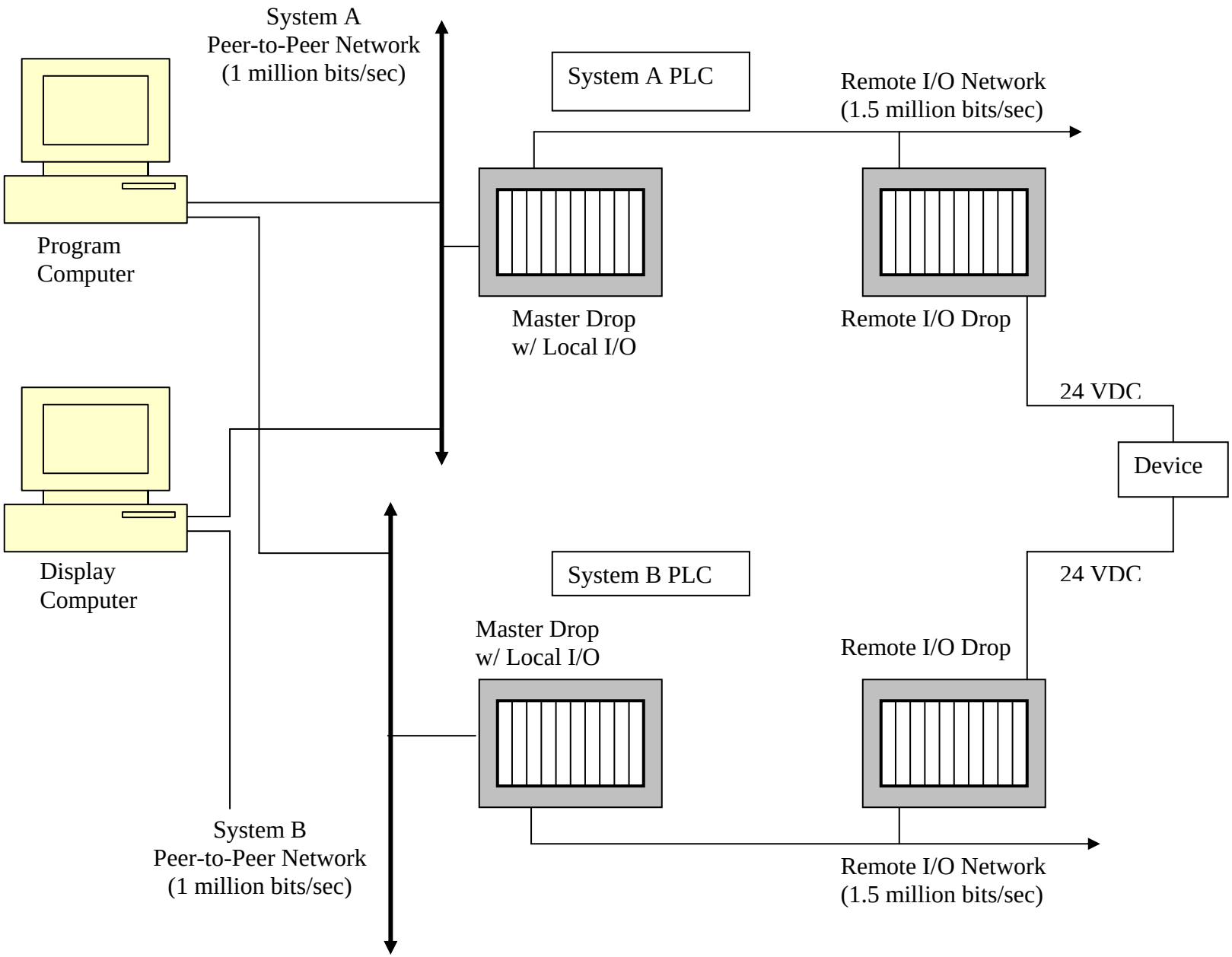
System A
Peer-to-Peer Network
(1 million bits/sec)
System A PLC
Remote I/O Network
(1.5 million bits/sec)
Program
Computer
Master Drop
w/ Local I/O
Remote I/O Drop
24 VDC
Device
Display
Computer
System B PLC
24 VDC
Master Drop
w/ Local I/O
Remote I/O Drop
System B
Peer-to-Peer Network
(1 million bits/sec)
Remote I/O Network
(1.5 million bits/sec)

PSS Device Interfaces:

Several high power devices are interlocked through the personnel safety system. The two major types of components are the RF high power amplifiers (HPAs) and the arc dipole magnet power supplies (box supplies).

All connections between these devices and the PSS are isolated through an interface chassis. The interface chassis contains a set of relays that isolate the power and ground of the PSS and the device.

Standard interface signals between the PSS and other devices are:

Permit — Output from the PSS to the device that enables the device to turn on high voltage. The permits from system A and system B are typically wired in series at the main on/off control line for the power supply.

Off/Safe — Contact closure in the power supply that indicates if the device is on or off. The fail-safe position for this signal is “ON/Unsafe” Off/Safe is used by the PSS to verify that the power supply is off before allowing controlled access.

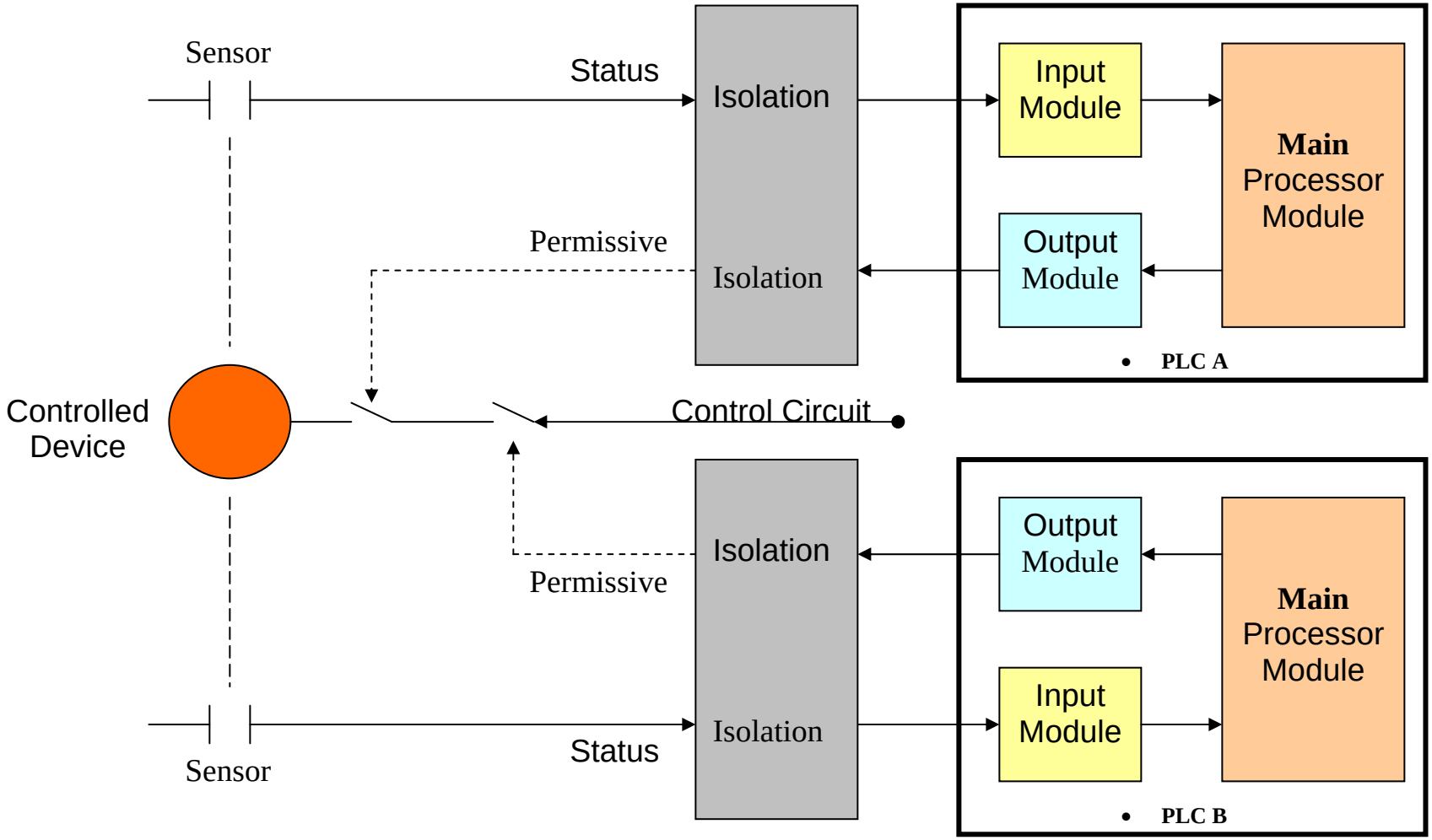

Sensor output must be +24 V to indicate safe.
PLC output must be +24 V to energize the controlled device.
Isolation is provided by relays, opto-couplers, or both.

Devices Interlocked through the PSS

Device

PLC
Gun HV Controller
Gun AC Contactor
Gun HV Grounding Switch
RF HPA
RF Waveguide Pressure
Magnet Box Supply
Arc Transfer Switch
Beam Stopper
CARM
Beam Kickers
Laser Driver (P-Gun)
Door and Hatch Sense Switches
Exchange Key
Crash Switch
Beam Current Monitor
Run/Safe Box
Magnetic Locks
Exit Request Switch
Emergency Exit Switch

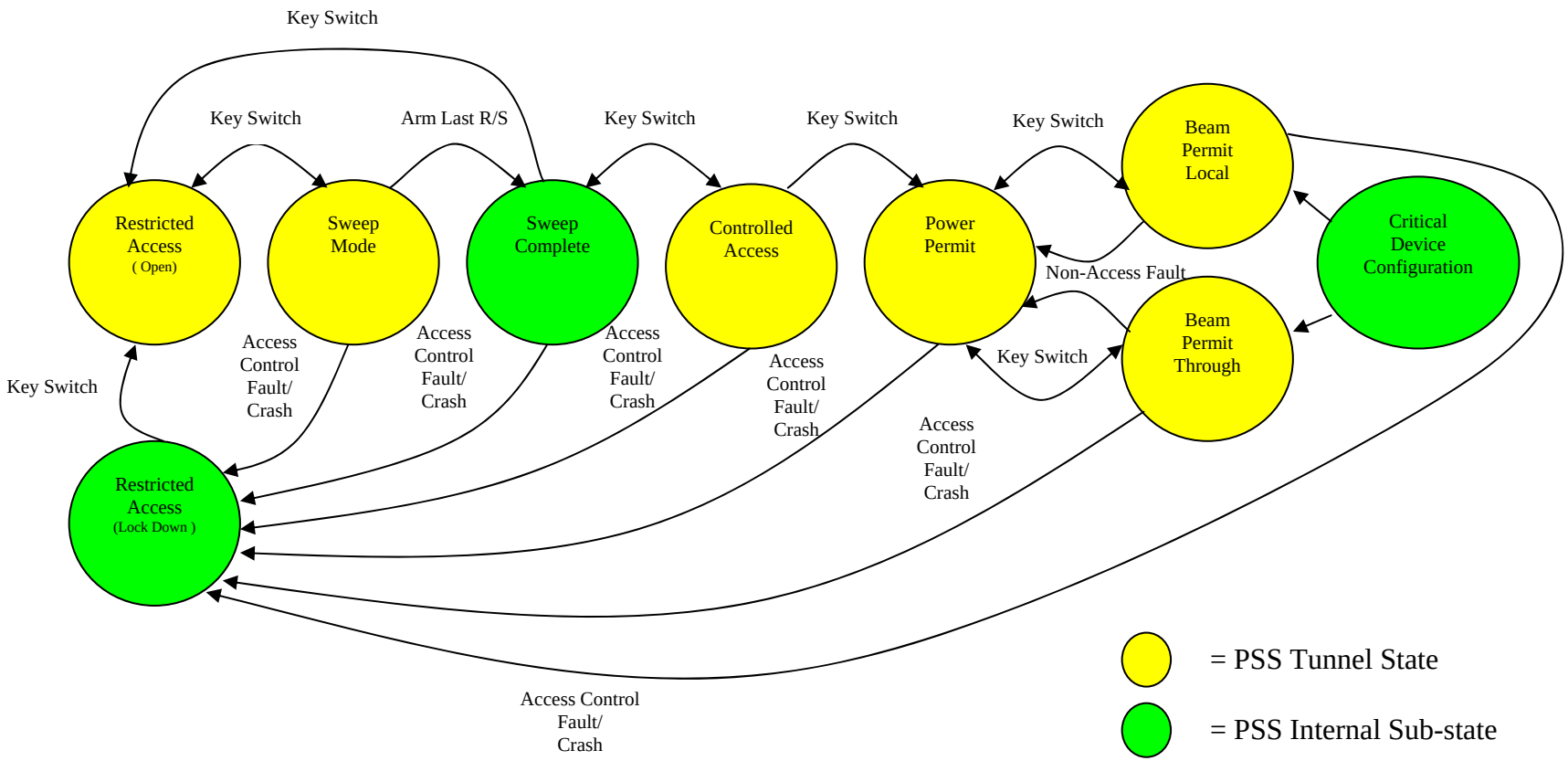

PSS Logic - State Diagram

Tunnel Access States:

There are five tunnel access states used in the Safety System. Each mode is defined by the status of the PSS inputs, i.e. it is state driven.

Restricted Access

Access State. This is the lowest or safest state of operation as far as the PSS is concerned. All high voltage devices are OFF. The tunnel is open for access by anyone with appropriate training.

Inputs: Restricted Access key switch or a “Crash”

Outputs: All HV devices are off
Beam stoppers are in
Run/Safe box "safe" lamp is ON
Restricted Access Mode goes to other segments

Sweep

Access State. In Sweep mode all personnel should be out of the tunnel. Tunnel gates are automatically locked. A sweep team enters the tunnel and follows a preset sweep pattern. A guard is posted at points where someone could enter behind the sweep team and avoid detection.

Inputs:
- Sweep key switch
- All doors, gates, hatches are CLOSED
- Run/safe boxes can be armed in order
- Run Safe box crash button OK
- TOP STOP crash button OK
- All HV devices are OFF
- Beam stoppers are IN

Outputs:
- All HV devices OFF
- Beam stoppers are IN
- Run/Safe box "safe" lamp is ON
- Run/Safe box "operational" lamp is ON (when armed)
- Tunnel gates are LOCKED
- Magenta beacons are ON

Controlled Access

Access State. Controlled access is used to allow limited entry into the tunnel under the direct supervision of a Safety System Operator. Personnel may not enter the tunnel until they have an exchange key and show the key and proof of dosimetry to the Safety System Operator. The absence of the exchange key inhibits any high voltage device in the area from operating. Until an Exchange Key is taken the inner door (D2) cannot be unlocked.

Inputs:
- Controlled Access key switch position
- All doors, gates, hatches are CLOSED
- All Run/safe boxes are ARMED (Sweep Complete)
- All Crash Buttons OK
- All HV devices are OFF
- Beam stoppers are IN

Outputs:
- All HV devices are OFF
- Beam Stoppers are IN
- Run/Safe box "safe" and "operational" lamps lit
- Tunnel gates are LOCKED
- Magenta beacons are ON

Power Permit

Exclusion State. In Power Permit mode high voltage devices within the segment are permitted to operate unless they affect safety in another segment. For example if a linac is in Power Permit the HPAs within the segment are allowed to run. However, if the BSY is in Power Permit and Hall C open, the Hall C dipole supply is not allowed to operate because it affects the safety of Hall C.

Inputs: Power Permit Key Switch (latched)
All doors, gates, hatches CLOSED
All Run/Safe boxes are ARMED (Sweep Complete)
All Crash Buttons OK
All exchange keys are IN
Power Permit from adjacent Segments (for Critical Device Control Logic)
Interlock “Ready” from RF HPAs

Power Permit - Continued

Outputs: Permissive to RF HPAs if interlocks are OK
Permissive to Box Power Supplies, if appropriate
Permissive to Beam Stoppers, if appropriate
Run/Safe box "Operational" and "Unsafe" lamps LIT
All doors with maglocks LOCKED
Flashing magenta beacons are ON
Tunnel Lights are OFF or 4-minute klaxon alarms

Beam Permit

Exclusion State. "Beam Permit" is an operational state of each PSS Segment. Strictly interpreted it means that - ALL protection devices within the segment are not faulted and the area is ready for beam.
"Beam Permit" is always coincident with "Power Permit".

The Injector PLC systems "look" at the Beam Permit Status of each segment to determine if a valid beam operations mode is present. Only if a defined combination of segments is in "Beam Permit", will the Injector grant permission for the electron gun to turn ON. Conversely, if any segment drops out of "Beam Permit", the Injector will also drop out of Beam Permit.

This output is called "Gun Beam Permit" or "Gun Permit"

There are 4 Modes that can resolve to allow "Gun Permit"

Any fault in a segment that is used to resolve "Gun Permit" will drop out the Gun HV.

The Gun Permit Modes are:

0. Beam to 500keV Spectrometer (configuration - Injector only)

1. Beam to North Linac (configuration - "straight mode" to In Line Dump)

2. Beam to BSY Dump (configuration - "recirculate mode")

3. Beam to Experimental Endstation (configuration - "recirculate mode")

This mode has 7 sub-states that are the possible operational combinations of the three endstations.

Beam to hall	A
Beam to hall	B
Beam to hall	C
Beam to halls	AB
Beam to halls	AC
Beam to halls	BC
Beam to halls	ABC

PSS Internal States

In addition to the tunnel states the PSS logic has internal logic states that do not directly affect the status of devices outside the PSS. These states do not explicitly define exclusion or access modes. They define conditions of subsets of the safety interlock system. These conditions are then used in higher logic functions to determine if PSS controls may be actuated.
For example, if the tunnel is swept and ready, a condition called "Sweep Complete" exists. The Controlled Access, Power Permit, and Beam Permit logic all use this condition as a requirement for that state.

Sweep Complete

As the name suggests, this sub-state is true when all Run/Safe boxes are armed and the sweep personnel have exited the tunnel. Sweep complete is used by all higher logic functions as one indication that the tunnel is secure.

Critical Device Configuration

Each area of the PSS has control over critical devices that affect it. An area can only go into "Controlled Access" when all critical devices are in place. Likewise, an area can only go into "Beam Permit" when the critical devices are configured to allow Beam transport into the area. Some areas have two Beam Permit modes. The particular mode exercised is dependent on the configuration of the critical devices affecting the area. For example, the BSY can be in "Beam Permit Dump" or "Beam Permit Endstation" modes depending on the configuration of the BSY beam stoppers and magnet strings.

For a given critical device configuration to be true, all critical devices in the area must agree on the state. For example, for the North Linac to be in Beam Permit Recirculate, the In Line Dump AND the East Arc beam stopper must be in the OUT position.

Restricted Access - Lock Down

This sub-state is used to maintain some access control over the tunnel when a crash has occurred. The state is true whenever the PSS mode is different than the position of the access control key switch. In the "Lock Down" condition, the tunnel gate magnetic locks remain energized until the safety system operator switches the access control key to "Restricted Access"

Access Control:

Access control is used to ensure that all personnel entering the tunnel are safe and accounted for. The PSS monitors all entries and exits of the tunnel. After a sweep has been performed, personnel may only gain access to the tunnel through double door entry points. All other possible means of entering the tunnel are monitored by the PSS. The tunnel will drop and have to be re-swept if any other door is opened.

Access vs. Exit Doors

The PSS makes a distinction between an "Access" door and an "Exit" door. An "Access" door is one of the double doors that are used to enter and leave the tunnel during a sweep or controlled access. All other doors and gates leading into a PSS tunnel segment are termed "exit" doors and may only be opened for emergency exit from the tunnel.

Exit Doors and Tunnel Gates

All tunnel doors, gates, and hatches have at least 2 interlock switches, one for each PSS chain. Fire exits and exit stair doors have 4 switches, 2 to sense the door position and 2 to sense that the door is locked. A red pilot light mounted in the exit door frames indicates that the doors are closed and locked.

Tunnel gates that separate PSS segments have magnetic locks that are automatically activated when the area on either side of the gate is in “Sweep” mode or higher.

All other exit doors are manually key-locked before a sweep. The doors use a special OPS lock called "TUN-7", located in the MCC keywatcher key box. These locks cannot be opened with the normal site master key.

Access Room

The access room is designed so that the SSO can "hold" personnel between the doors until all processing in or out of the tunnel is complete.

All access areas have 2 magnetically locked doors. During an access, the door locks may be manually controlled by the SSO. When the tunnel is switched to "Power Permit" the access room doors are automatically locked.

The access room also contains a controlled access exchange key bank and a phone used to contact the SSO.

A message display over the outer door gives the current status of the tunnel.

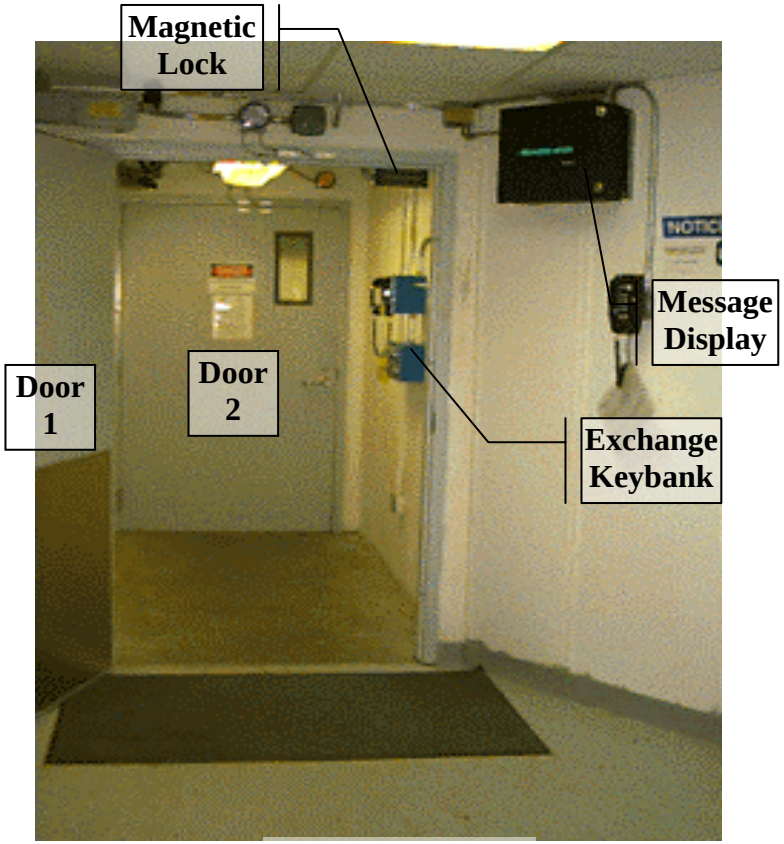

Access Room