Personnel Safety System

Operator Training

Table of Contents

Table of Contents 2

Part 3: PSS Fast Electronics Systems 3

Beam Current Monitor System 6

Diagnostics 15

BCM Operation: 16

Fast Beam Shutdown Devices 18

Beam Kicker System 19

Electron Gun Fast Interface 22

Part 3: PSS Fast Electronics Systems

What are the fast electronics systems?

- A separate way to shut off the beam in addition to the PLC system.
- Designed to react to situations where beam could damage a critical device.

Why a Fast system?

- It is theoretically possible to burn through a beam stopper in less than 50 ms.
- The PLC system cannot react fast enough under these conditions to shut off the beam.
- The Fast Gun Interface system can shut off the beam in less than 1 ms.

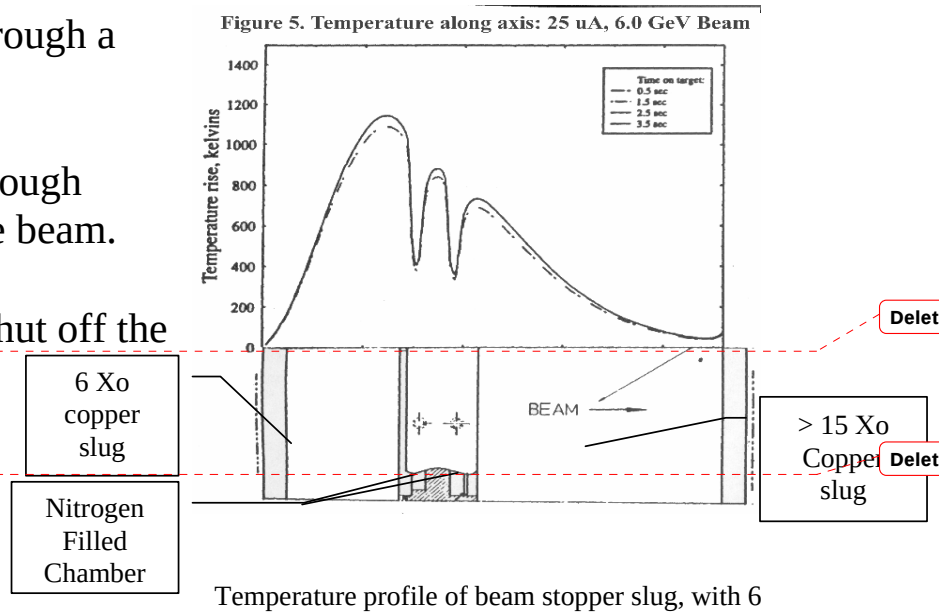

Temperature profile of beam stopper slug, with 6 GeV, 25 μA beam strike.

Deleted: <sp><sp>

Deleted: <sp><sp><sp>

The Fast Electronic Systems are composed of:

- Beam Current Monitors
  - Measures Beam Current
  - Generates or removes 625 kHz Permissive to Fast Gun Shutdown Devices

- Fast Gun Shutdown Devices
  - Gun Modulator Permissive (SCAM)
  - Polarized Source Permissive
  - Beam Kicker Permissive (X and Y)

The Fast Gun Interface uses a permissive signal much like the FSD system. The frequency used is **625 kHz** instead of **5 MHz** to prevent accidentally using the wrong signal.

Loss of the 625 kHz signal, or the signal getting stuck at a DC level is detected as a fault by the beam shutdown devices.

Beam Current Monitor System

What is it?

The BCM system is a redundant network of beam current measurement devices and fast beam shut down devices that are used for personnel protection.

What is each BCM composed of?

- A Three port RF Cavity
- Two Down converters (System A and System B)
- Two Logic Interface Units (System A and System B)
- One Test/Verification Unit

What does it do?

- Measures Beam Current in the injector and in front of each beam stopper.
- Detects if the beam current is greater than 190 uA (Injector) or is greater than 5000µA-µs.
- Shuts off the beam if a fault is detected.
- Provides a semi automated self-test capability.

How does it do this?

- Down-converter subsystem provides a voltage linearly proportional to current and an integrating threshold detector.
- Logic Subsystem monitors faults and routes permissive signal to beam shutdown devices.
- Beam shutdown devices stop beam injection past 100 kV point of machine if permissive signal is not present.
- Test/Verification subsystem automatically sequences test of each BCM and shutdown device.

Where are the BCMs located?

Cavities are located in the beam line at:

- Injector after the 45 MeV dump
- East Arc after 1A03
- BSY before 1C01 (Halls A)
- BSY before 2C03 and 3C03 (Hall B and Hall C transport line)

Electronics are located in the upstairs service buildings at:

- Injector service building Rack IN03B03
- East Arc service building # 2 Rack E201B01
- Beam Switch yard service building Rack BS04B18

What BCM Faults will shut off the beam?

- Injector Beam Current > 190 µA
- Beam current at any inserted beam stopper I_b > 1µA AND > 5000 µA-µs
- Any BCM system card not connected
- Voltage out of regulation on any BCM subsystem
- Calibration Level out of limits
- Down-converter Local Oscillator out of limits
- Interconnecting coax or cables not connected
- Failure of Verification/Self Test
- Kicker Bias Supplies out of range
- 625 kHz permissive signal missing for any reason

Is the BCM system completely separate from the PLC based PSS interlock system?

No

Each BCM system receives a beam stopper status signal from the PLC systems.

Each BCM system sends a fault signal to the PLC system so that the 100 kV will be shut down after a fast beam shut down has occurred.

The BCM system's ability to shut off the beam through the fast beam shutdown devices is independent of the PLC system.

How is this system different from the MPS Beam Current Accounting?

- The PSS BCM system is designed to protect people. The machine protection system is designed to protect the lab's investment in hardware.
- Both systems use similar technology and down-converter subsystems.
- The PSS BCM system is implemented redundantly
- The PSS system does <u>not</u> use beam accounting - comparison of beam current in the injector to beam current at a beam dump.
- The PSS system uses its own dedicated beam shutdown devices instead of relying the Fast Shutdown System.
- The PSS system uses different permissive logic.

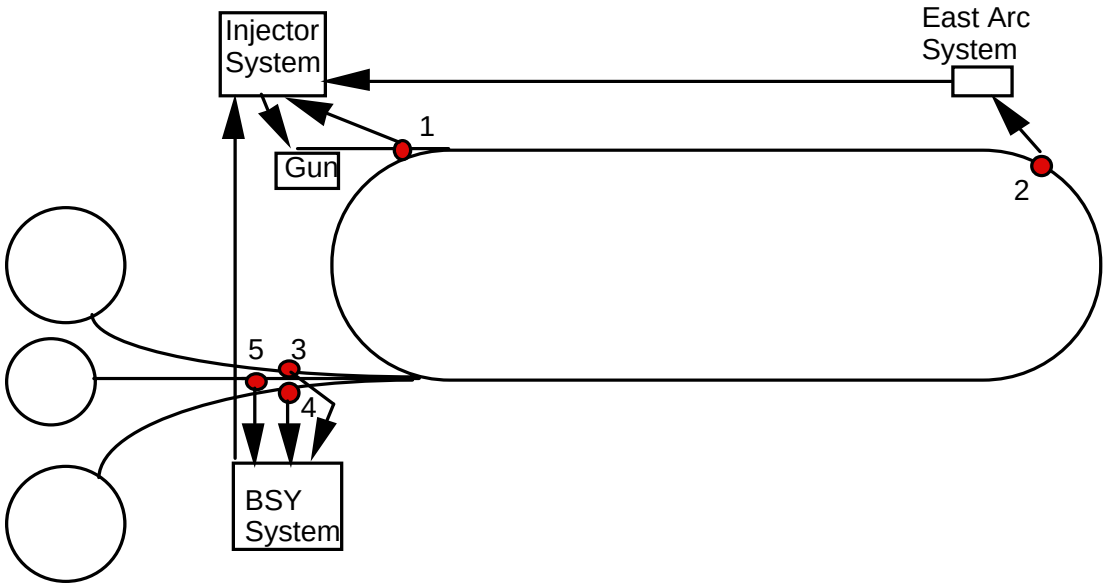

Deleted: <sp>

BCM Permissive Signal Path

Injector BCM System

- Master System. Receives Permissive from other areas.
- Monitors average beam current. Faults if I_b > 190 µA.
- Distributes Permissive to beam shutdown devices in the Injector tunnel.

East Arc BCM System

- Senses Position of East Arc Beam Stopper
- Faults if East Arc stopper is **IN** and beam current is > 1µA average.

Beam Switchyard BCM System

- Three subsystems - one for each beam line.
- Senses position of Hall A and C beam stoppers.
- Faults if Hall A or C beam stoppers are IN and beam current is > 1µA average.
- Faults any time Hall B beam current is > 1µA average.

Each BCM System is composed of three subsystems.

Beam Current Monitor

- Converts beam induced RF into DC voltage proportional to beam current.
- Integrates measured beam current.
- Faults if measured current is > 5,000 µA-µs (Beam Stopper Systems)
- OR Faults if measured beam current is > 190 uA for > 1ms (Injector System)

Logic/Interface Unit

- Receives Input from PLC determining Beam Stopper status.
- Monitors Health Status of BCM, Test/Verification, and beam shutdown devices.
- Latches Faults
- Routes Permissive through BCM integrator
- Routes Permissive to Beam shutdown devices (Injector System)

Test/Verification Unit

- Performs self-test of complete system.
- Failure of test sent to Logic/Interface Unit as fault.
- Monitors status of fast beam shutdown devices.

The Beam Current Monitor and Logic Interface Unit are implemented redundantly (System A and System B). There is one Test/Verification unit for each geographical area, e.g. Injector, BSY.

Diagnostics

Each Card in the Beam Current Monitor sends a health status. If the health is bad the Logic card will remove the 625kHz permissive. The Test/Verification Unit sends a test status bit back to the Logic Card. If the test status is bad the Logic Card will remove the 625 kHz permissive.

The logic card also contains a latched relay output that is monitored by the local PLC. The contacts are open on fault. If the local PLC senses a fault it will drop the area out of Beam Permit. By dropping an area out of Beam Permit the 100 kV to the gun is turned off.

All faults are latched.

They can be reset by:

- Switching the Access Control key to "Beam Permit" for the appropriate segment
- Manually resetting the latch with a front panel switch on the BCM chassis

BCM Operation:

When the PSS is configured for operation to the North Stub dump the Injector Logic Interface Unit (LIU) passes the permissive signal from the East arc and ignores the permissive signal from the BSY. As a condition for operation to the North Stub the East Arc beam stopper MUST be inserted. This is required by the PLC logic.

The LIU receives a “Look At East Arc” signal from the Injector PLC if:

- The East Arc Transfer Switch is in the "Straight” (NL Beam Dump) position
- The East Arc Magnet string has zero current
- The East Arc Beam Stopper is in the IN position
- The East Arc Beam Stopper Pressure Chamber is “OK”

When the PSS is configured for operation to the BSY, or one or more of the endstations, the Injector LIU passes the permissive from the BSY and ignores the Permissive from the East Arc. The PLC logic is such that both of these conditions cannot be true.

The Injector LIU receives a “Look At BSY” from the Injector PLC if:

- The East Arc Transfer Switch is in the “Recirculate” position
- The East Arc Beam Stopper is in the OUT position

The BSY LIU decides if the Hall A or C BCMs may be bypassed. The Hall B BCM is never bypassed.

The Hall A and C BCM permissive signal may be bypassed if:

- The endstation associated with a BCM is in “Beam Permit”
- Beam Permit is sent from the BSY PLC to the Injector when:
    - The endstation’s beam stopper is in the “OUT” position
    - The Beam Stopper pressure is OK.

Fast Beam Shutdown Devices

What are the Fast Beam Shutdown devices?

Fast ways of stopping beam. They do not necessarily stop beam emission altogether but inhibit beam from going past 100 kV section of injector.

Why are they necessary?

Catastrophic damage could occur to a beam stopper before the PLC system could react to shut off beam by turning off the gun 100 kV.

How fast are the Fast Beam Shutdown Devices?

Each can independently shut off the beam in < 200µs.

Where are the fast beam shutdown devices located?

- Beam Modulation Control Card (SCAM) - Injector Service building
- X-plane beam kicker - Between injector apertures 1 and 2.
- Y-plane beam kicker - Between injector apertures 1 and 2.
- Polarized Source Laser Interface

Beam Kicker System

The Beam Kickers are designed as a fast means of diverting high current beam away from a Beam Stopper.

The Kickers work by biasing bifilar wound coils with equal but opposite currents. When a fault is detected a fast relay opens up one winding, thus leaving a net “Kick” as seen by the beam.

The beam is deflected onto water-cooled aperture A2.

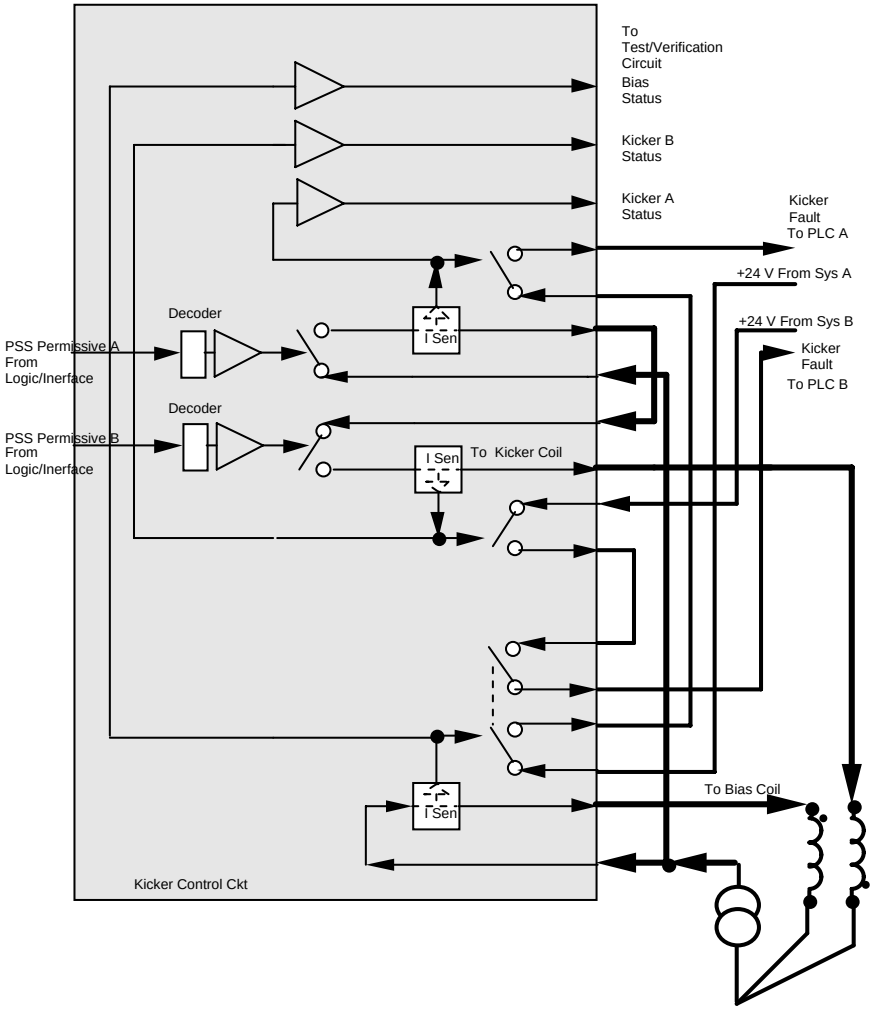
To
Test/Verification
Circuit
Bias
Status
Kicker B
Status
Kicker A
Status
Kicker
Fault
To PLC A
+24 V From Sys A
+24 V From Sys B
Kicker
Fault
To PLC B
Decoder
PSS Permissive A
From
Logic/Inerface
I Sen
Decoder
PSS Permissive B
From
Logic/Inerface
I Sen
To Kicker Coil
To Bias Coil
I Sen
Kicker Control Ckt

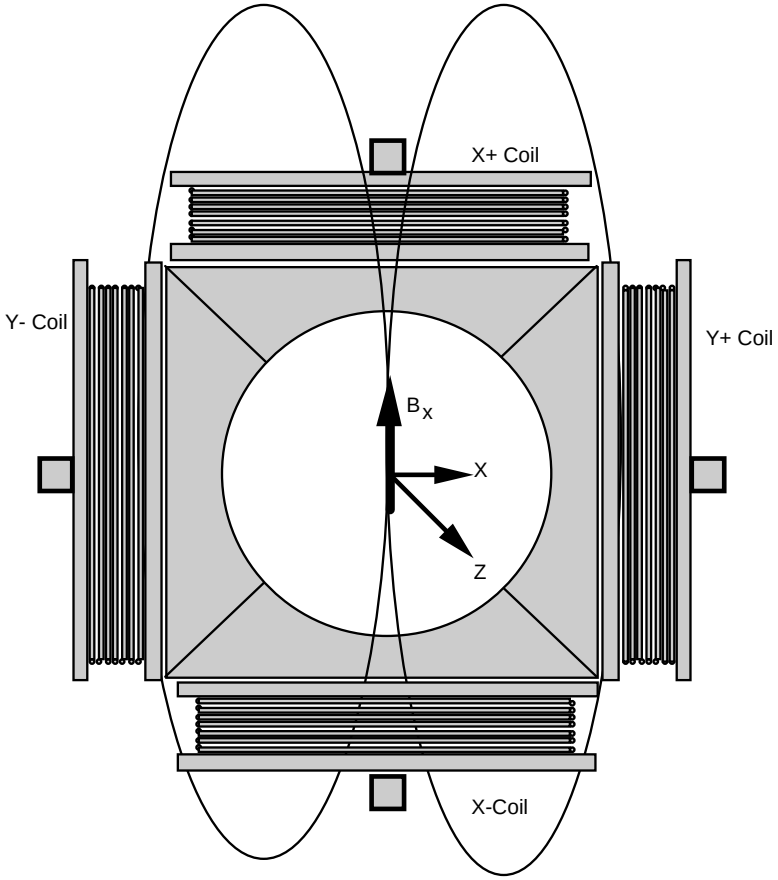

Beam Kicker Magnets

Electron Gun Fast Interface

The Polarized sources use Field Effect Transistors technology to clamp the cathode modulation to the OFF position for fast beam shutoff from the PSS.

In addition to the cathode supply clamps there is an additional signal that goes to each beam modulation generator (SCAM) in the Injector Service Building.

This signal is not counted as a critical device interface because it is not practical to include it under PSS configuration control.

Loss of the 625 kHz Permissives will stop beam modulation.

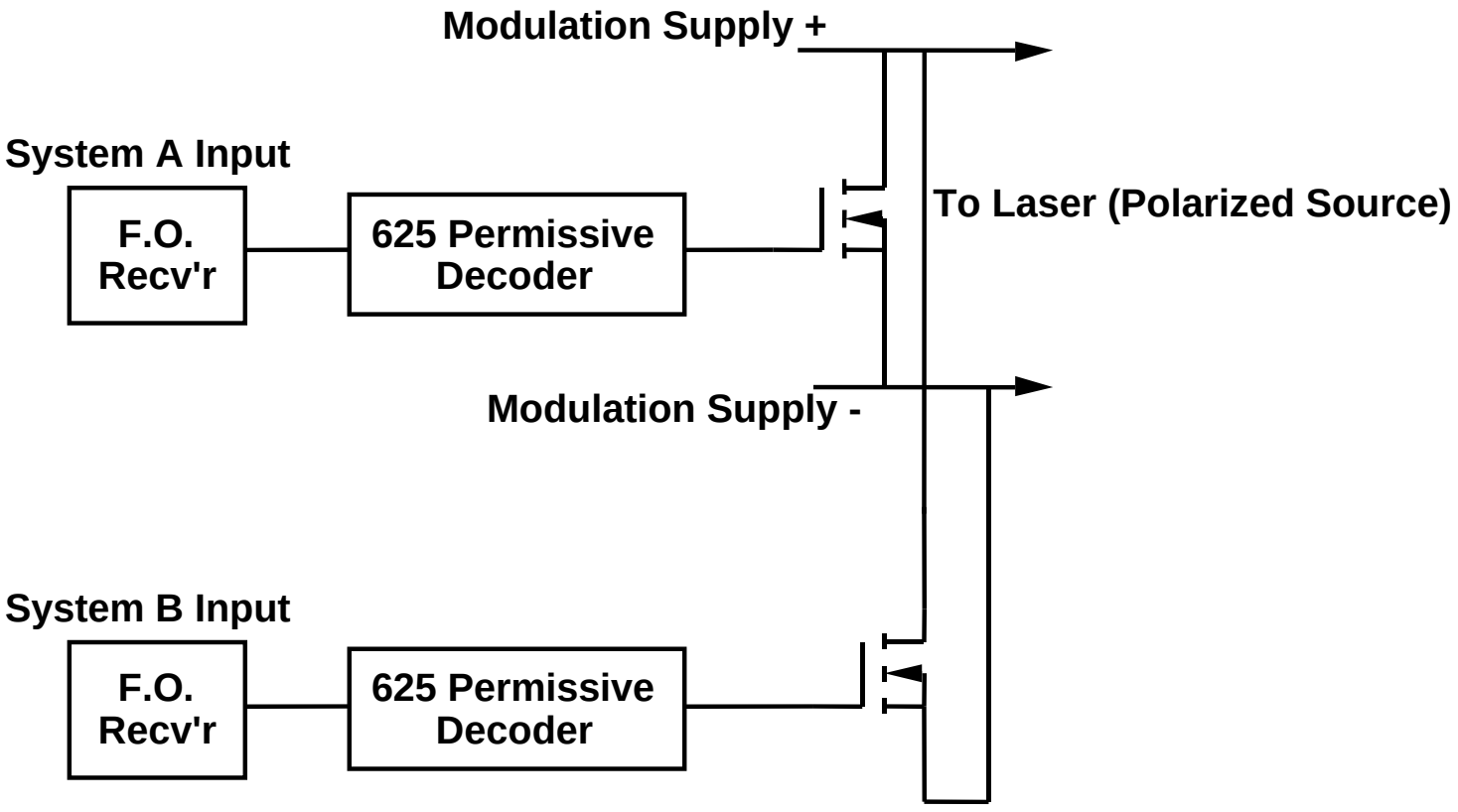

PSS -Gun Fast Shutoff Interface