Accelerator Glossary

Rev. 1.4
Revised February 27, 2004

Introduction

This list originally started as a handout for an "Introduction to JLab Accelerators" class I taught in 2003. Accelerator terms and acronyms are bandied about in 8 am meetings like candy and it's easy for the uninitiated to get lost. The list is only intended to give the reader an inkling of the concepts associated with the definition. For more in depth explanations see the references at the end of the document. There is some math for the illustration; however it is only there because pictures would take up too much space. The equations are not rigorous to say the least.

If an item in the first column is hyperlinked, the link will take you to a web page with more information. Hyperlinks within the second column take you to the definition of the linked term within the glossary. There are no cross reference entries so if you cannot find the term you are looking for I recommend using the search function in the Adobe Acrobat® reader.

As I come across the need to define other parameters I try to keep the list updated. I encourage you to e-mail me with corrections or comments. I certainly never meant for the list to be as extensive as it is and even at that it is not in any way comprehensive. Your input is welcome and a list of significant contributors is given below the citations at the end of the document. I do retain editorial license for consistency.

Enjoy,

Kelly Mahoney,
Group Leader for Safety Systems,
Thomas Jefferson National Accelerator Facility (JLab)
mahoney@jlab.org

Disclaimer: The following definitions are a combination of my own interpretation or the operations acronym list as edited by me. The definitions are only intended to give one an idea of the nature of the topic and generally apply the JLab electron accelerators. Errors should be fed back to me for correction.

0I	Injector beam line nomenclature from the Polarized Source Faraday Cup to exit of the quarter cryomodule.
0L	Injector beam line nomenclature from the exit of the quarter cryomodule to the entrance of the injector chicane.
0R	Injector beam line nomenclature for the injection chicane.
1A,3A…9A	East Arc beam line, pass number nomenclature
1C, 2C, 3C	Beam line nomenclature for beam line between BSY and the individual hall transport lines. 1C=Hall A, 2C=Hall B, 3C=Hall C.
1E,3E…9E	East extraction region beam line nomenclature
1H, 2H, 3H	Beam line nomenclature for beam line inside the endstations. 1H=Hall A, 2H=Hall B, 3H=Hall C.
1I	Preinjector beam line nomenclature from 15 degree bend to Polarized Source Faraday Cup
2I	Preinjector beam line nomenclature from Gun2 photocathode to 15 degree bend
3I	Preinjector beam line nomenclature from Gun3 photocathode to 15 degree bend
1L	North Linac beam line nomenclature
1R,3R…9R	East recombiner region beam line nomenclature
1S,3S…9S	East spreader region beam line nomenclature
2A,4A…8A	West Arc beam line, pass number nomenclature
2E, 4E…8E	West extraction region beam line nomenclature
2L	South Linac beam line nomenclature
2R,4R…8R	West recombiner region beam line nomenclature
2S, 4S…8S	West spreader region beam line nomenclature
2T, 4T..	Transport beam line from south linac to BSY nomenclature
4C	BSY beam dump beam line nomenclature
30Hz (System)	Diagnostic system that modulates beam position and energy in the injector or the Arc 1 Extraction region and North Linac at 30Hz. The perturbation propagates through the accelerator and is detected by the BPM system as a differential orbit. The machine optics is tuned real-time using this differential signal. The system can also be used to characterize the beam acceptance or available aperture of the beam transport system.
4 Channel (BPM)	Diagnostic that uses four parallel analog signal processing channels to measure signals induced by beam passing by RF electrodes. The four orthogonal wires are oriented at 45 degrees to the x-y plane to provide clear aperture in the normal plane. Rotation to x-y plane is performed in software and beam position is measured by the relative difference and sum of each channel.

Accelerator Glossary Rev. 1.4

Revised February 27, 2004

α_c	Cavity form factor – Relates the specific shape of a RF Cavity to the forward power required to achieve a given gradient. The α_c of the JLab 5 cell cavities is $\alpha_c = 4.424\text{x}10^{-5} \frac{MV}{m\sqrt{W}}$
$\alpha_{x,y}$	$\beta_{x,y}$ growth factor. $\alpha = -\frac{1}{2}\beta'$ One of three basic parameters that describe the transverse motion of a beam.
β, Beta	Particle velocity relative to the speed of light = v/c. One of three basic beam transport parameters.
$\beta_{x,y}$ Beta Function, Betatron Oscillation	Amplitude function. [Not associated with velocity β] Periodic variation of beam envelope properties (e.g. transverse size) with longitudinal distance. One of three basic beam transport Courant-Snyder parameters that describe the transverse motion of a beam. Dimensions are in meters.
γ, Gamma	Relativistic factor, = $\gamma = \left(1-\beta^2\right)^{-\frac{1}{2}}$. Used to quantify changes in physical properties due to velocity of particle relative to a particle at rest. For example the equivalent mass of a relativistic particle is $m_r = \gamma m_o$. One of three basic beam transport parameters.
ν, Tune	Property of closed circuit accelerators equal to the phase advance of betatron oscillations around a closed circuit orbit. $\nu = \frac{1}{2\pi}\Delta\psi_C$ **Error! Bookmark not defined.** where ψ_C Refers to the phase advance over the circumference. In ring accelerators like FERMI, tune must not be an integer of $\frac{1}{\pi}$ in order to avoid collective instabilities in the beam. CEBAF is a recirculating machine and it's "tune" is more correctly referred to as betatron phase advance. CEBAF 's "tune" is an integer function since we want all beam buckets from each pass to align in the linacs. You can get away with this in a 5 pass machine, however, at higher passes the instability would contribute to beam break up.
ψ, Betatron phase advance	As the beta function changes through the accelerator, there is an effective phase advance over longitudinal distance (s). $\frac{d\psi_{x,y}}{ds} = \frac{1}{\beta_{x,y}}$
Accelerator (Particle Accelerator)	Machine or equipment used to transfer kinetic energy to charged particles in order to increase the momentum of the particle. The JLab accelerators are the CEBAF, FEL, and ELIC (proposed).
Acceptance, Admittance	Parameter envelope (e.g. acceptable phase space) within which beam will be transported through an accelerator section without beam significant loss.

Accelerator Glossary Rev. 1.4

Revised February 27, 2004

Adiabatic (damping)	Property whereby as a particle is accelerated the transverse emittance decreases as the momentum increases. The transverse emittance is usually normalized by the factor $\varepsilon_{n(x,y)} = \gamma\beta\varepsilon_{x,y}$. Not truly a damping process but rather a conservation process, also termed an 'invariant.' 'Adiabatic' in this context means no net gain or loss of energy in the system (e.g. beam bunch).
AMS	**A**nalog **M**onitoring **S**ystem (hardware) system that allows a user to view remotely located signals in the control room.
AO (cell)	**A**custo-**O**ptic (hardware) device that can modulate a laser beam using an electromechanical polarization control.
AOD	**A**ccelerator **O**perations **D**irectives (document) Describes the roles, responsibilities, and procedures for conducting accelerator operations and maintenance.
Archiver	Software program that continuously records control system signals for later display or analysis.
AS-I	**A**ctuator-**S**ensor **I**nterface – industrial two-wire bus system and protocol that can be used for very high reliability, low I/O count applications. Instead of separately wiring switches, actuators, sensors, and controls to separate input/output electronics, up to 32 AS-I devices sit on the bus. Now primarily used for industrial controls and machine safety, SIL 3 AS-I rated devices may be used in future accelerator personnel and machine safety systems.
BBU	**B**eam **B**reak-**U**p – point where collective beam bunch instabilities exceed the acceptance of the beam transport system. Especially difficult to handle in high current accelerators.
BCA	**B**eam **C**urrent **A**ccounting (hardware) system that measures differential beam loss. Used in machine protection systems.
BCM	**B**eam **C**urrent **M**onitor (diagnostic) absolute beam current measurement used in PSS and MPS systems.
Beam Dump	Device designed to completely capture and dissipate the beam energy. JLab beam dumps range in capacity from 1 kW to 1MW.
Beam Loading	Reduction in the gradient in an RF cavity by transference of energy from the gradient to the beam. Seen by the RF control system as a reduction in the gradient (loading), therefore the RF system will request higher forward RF power to compensate. The degree of loading is strongly dependent on the cavity design and conductivity. Superconducting cavities experience strong beam loading effects. Most normal conducting cavities do not.
Beam Mode	(FEL operations) Setup of the FEL machine protection system and DLPC describing the maximum allowed electron beam duty factor and current for a given Machine Mode.

BELS	**B**eam **E**nvelope **L**imit **S**ystem (hardware/software) that measures the total beam power delivered to each endstation to ensure compliance with the CEBAF Operations and Safety Envelopes. The system will warn the operator if the total power approaches 800kW. If the 800kW threshold is exceeded for 15 minutes, both software and hardware based systems will shut off the beam. If these systems are not available, a backup system will shut off the beam if it reaches 1 MW.
BLIC	**B**eam **L**oss **I**on **C**hamber (hardware) system that uses argon filled ion chambers to protect equipment in high radiation background areas where BLMs would not be appropriate. For example, BLICs are installed around targets and beam dumps. BLICs are calibrated to measure absolute radiation dose rate in rads/hour.
BLM (MPS)	**B**eam **L**oss **M**onitor (diagnostic/machine protection) A system that uses photomultiplier tubes to detect radiation created by beam loss. There are machine protection BLMs which integrate the loss over time and can trip off the beam, and diagnostic BLMs that use logarithmic amplifiers to view very small amounts of beam loss but do not trip off the beam.
BLM (Diagnostic)	**B**unch **L**ength **M**onitor(diagnostic) – Cavity based transient phase monitor that measures the time envelope of the beam bunch.
BOOM (Log)	**B**eam **O**perations **O**bjective **M**onitor (software) that compiles real-time beam delivery statistics and automatically assembles summary reports of operations shift machine performance.
Boundary Monitor	Radiation monitor located at site boundaries used to record background and operations dose and dose rate.
BPM	**B**eam **P**osition **M**onitor (diagnostic) that measures transverse position of beam. JLab uses 4 Channel, SEE, and nanoamp BPMs.
Bremsstrahlung	Photon radiation created when high-energy electrons lose energy when interacting with nuclei. Called "Braking Radiation"[i]
BSCOPE	**B**eam Oscillo**scope** (software) that displays SEE beam position monitor signals in the time or frequency domain.
BSM	**B**eam **S**craping **Mo**nitor (diagnostic) system that puts a small transverse motion on the beam and then looks for this frequency as am modulation on the beam current monitor signal. The signal will only be present if the beam is scraping at that frequency across something in its path.
BSY	**B**eam **S**witch **Y**ard (location) where beam is separated between the three endstations. Beam may also be terminated in a 120kW dump in the BSY.
Bucket	(RF) Stable region of longitudinal phase space that will contain a beam bunch without loss. Essentially the "wave" upon which a bunch rides as it is accelerated.

Accelerator Glossary Rev. 1.4

Revised February 27, 2004

Bunch	Electrons grouped such that they occupy a small longitudinal space relative to the wavelength of the accelerating RF frequency. The CEBAF bunch length is about 0.5 mm. The number of electrons per bunch can be calculated by $n = \frac{I}{Q_e f}$ where I is the beam current, Q_e is the electron charge ($1.60217733 \times 10^{-19}$ C), and f is the bunch frequency (nominally 499MHz for each endstation).
Buncher	RF cavity used to reduce the longitudinal spread of the beam from 60° to 6° of 1497MHz RF phase.
BURT	**B**ack**U**p and **R**estore **T**ool (software) where operation setpoints can be saved and recalled by operators.
CAMAC	**C**omputer **A**ided **M**easurement **A**nd **C**ontrol (data acquisition and control) standard card cage that houses Input/Output (I/O) devices.
Capture	5 cell copper RF cavity used to preaccelerate the beam from .5 to .86 c. Each subsequent cell in the capture cavity is slightly shorter in length to accommodate the decrease in time of flight of the beam as it accelerates.
CARM	**C**ontrolled **A**rea **R**adiation **M**onitor (hardware) intelligent radiation monitor that has the capability to measure gamma and neutron radiation, set alarms, record dose and dose rate, and communicate with a central computer.
Cavity, RF Cavity	A closed volume, e.g. cube, cylinder, sphere, ellipsoid, that resonates at frequencies whose wavelengths are half integer multiples of the dimensions. At the right frequency, a resonant field can build up to store thousands (copper cavity) or millions (superconducting cavity) of times more energy than when off resonance. This is the fundamental foundation for accelerating structures that can develop gradients equivalent to millions of volts.
CDE	**C**ommon **D**esktop **E**nvironment (software)
CDEV	**C**ommon **DEV**ice (software) modules used as a standard interface to equipment or other software.
CEBAF	**C**ontinuous **E**lectron **B**eam **A**ccelerator **F**acility – Recirculating electron linac accelerator with up to 6GeV and 800kW of beam power. Can operate up to three simultaneous nuclear physics experiments.

Chicane	Transport section consisting of at least four dipole magnets the first two of which bend the beam off axis in one plane then back to an axis parallel with the original beam. The chicane then usually has a straight section followed by the last two dipole magnets that bend the beam back to the same axis as the entrance of the chicane. This puts a kink in the beam transport that can be used for several purposes. One is to add an area where the beam path length can be adjusted by having the beam transport through the chicane off to one side or another from the centerline. Another is to create a straight section off axis of the rest of the beam transport. Agents such as light can either be introduced (Compton Polarimeter) or extracted (FEL) in the offset section on axis with the beam in the chicane.
CHL	**C**entral **H**elium **L**iquefier (location/system) used to cool helium to 4.2 Kelvin.
Chopper	Two cavity system where the first cavity scans the electron beam in a helical pattern across a variable width aperture and the second cavity removes the helical kick to the beam so that the chopped beam goes straight down the center of the beam pipe again.
Chromaticity, Chromatic	Property of magnetic bending strength dependence on momentum. Ideally a lattice, like the CEBAF arcs, would transport all particles within an energy range ΔE (or momentum Δp) so that they all exit the lattice without increasing the beam size due to momentum separation. Related to dispersion.
CM, cryomodule	**C**ryo **M**odule (hardware) mechanical assembly of 8 superconducting cavities (4 cavity pair) in an insulating vacuum jacket. External connections include RF waveguide, Beam line, cryogenic lines, and instrumentation.
CMTF	**C**ryo **M**odule **T**est **F**acility – shielded area in test lab used to test completed cryomodules.
Compton Polarimeter	Device used to measure the collective polarization ratio of the beam by measuring the scattering angle of a laser-electron beam interaction.
Courant-Snyder	Parameters that describe the phase space parameters of a beam in terms of α,β,and γ. Usually expressed in matrix form. $\varepsilon\begin{bmatrix}\alpha & \beta \\ \gamma & -\alpha\end{bmatrix}$ Also called TWISS parameters.
CPS	**C**athode **P**ower **S**upply – High voltage power supply for the high power klystron RF amplifiers.
Crew Chief	(position/title) Lead operator for a given work shift. Responsible for executing machine operation program, site safety, crew supervision, and record keeping during an operational shift. Crew Chiefs are designated by the Accelerator Division Associate Director.

CSR	**C**oherent **S**ynchrotron **R**adiation – produced when the bunch length is small compared to the wavelength of the synchrotron radiation produced in a bend, $\sigma < \frac{\lambda}{2\pi}$. The particle bunch follows a curved path but the synchrotron radiation goes in a straight line and "catches up" with the bunch such that it adds coherently to itself. This self excitement in the bunch can be a major cause of beam instability in very short bunches. CSR is a good thing if you are trying to make an intense light source or diagnostic, a bad thing if you are trying to make a very short, high intensity bunch, e.g. like the FEL.
CTF	**C**ryo **T**est **F**acility – prototype cryogenic plant now used to supply cryogens to the CMTF and VTA cavity production and test areas.
CU, Cryounit	**C**ryo **U**nit also called Quarter cryomodule (hardware) mechanical assembly of 2 superconducting cavities (1 cavity pair) in insulating vacuum jacket. External connections include RF waveguide, Beam line, cryogenic lines, and instrumentation. The FEL and CEBAF accelerators each use one cryounit for injector preacceleration.
CUE	**C**ommon **U**nix **E**nvironment (software) that allows virtual linking of all internal computer resources.
CW	**C**ontinuous **W**ave (attribute) - an uninterrupted particle beam micropulse structure without an interpulse period. A duty factor of 100%. CEBAF and the FEL are Continuous Wave accelerators. Most pulse machines run at less than 12% duty factor.
Datacube	High performance video digital signal processor used to analyze beam images from diagnostic systems like the viewers, OTRs, SLMs, and SLIs.
Difference Orbit	Difference in betatron oscillations verses the nominal or design values.
Diffuser	A thin disk placed in the beam path for the purpose of increasing the beam spot size (area) down stream in order to spread out the heat deposited in a downstream device.
Dispersion (function)	Orbit displacement x(s), y(s) as a function of change in momentum $\frac{\Delta p}{p_0}$. Measured in units of distance (m). A high dispersion area will generate large changes in position versus momentum. This is great for a spectrometer but excessive dispersion in the transport arcs can lead to beam loss.
DLPC	Drive Laser Pulse Controller (hardware) macropulse timing generator for the FEL. Timing is set by the machine modes (set up) and beam modes (average current).

Dogleg	Sets of dipole magnets with a large horizontal vacuum chamber used to individually adjust the path length of the CEBAF beam in each arc. Doglegs are initially adjusted mechanically. The field strength can then be adjusted for +/- 18 degrees of the 1497 MHz, or about +/- 1 cm.
Drive Laser	Laser used to illuminate a photocathode to produce the initial electron beam.
DTL (software)	**D**own**T**ime **L**ogger (software) that automatically records extent and reasons for time when beam is off. Given as report at the end of an operations shift.
DTL (accelerator)	**D**rift **T**ube **L**inac (accelerating cavity) A series of small, longitudinally aligned cylinders inside larger RF cavities. When RF is applied, a large gradient (voltage) develops in the gap between the cylinders. The RF is phased to always present an accelerating field to the beam. Between gradient gaps, the beam "drifts" through holes in the center of the cylinders. The SNS uses a drift tube linac to accelerate the beam before injection in to the superconducting linacs.
Duty Factor	Ratio of On time to Total time. 100% duty factor means on continuously. $DF = \frac{t_{on}}{T_r} = t_{on} f_r \quad where \frac{1}{t_{on}} \leq f_r$. The CEBAF accelerator normally operates continuous wave (CW), or 100% duty factor. The duty factor of the CEBAF tune beam is $254.2 \times 10^{-6} s \times 60 Hz = 1.525\%$.
ELIC	**E**lectron **L**ight **I**on **C**ollider – Proposed future accelerator that would collide electrons with heavier particles like protons and ^{3}He (Helium 3).
ELOG	**E**lectronic **LOG**book (software) that facilitates record keeping for operations. Records can be entered in any of several e-logs simultaneously. Log viewer is web based.
Emittance, $\varepsilon_{x,y,}$ -Transverse	Attribute that describes the transverse beam envelope properties in terms of space (x , y) and divergence (x', y'), termed phase space. $\pi\varepsilon$ is the area of an ellipse (whose axes are n, n') traced by a particle as it moves down the beam line. Dimensions are in distance-angle units, e.g. mm-mradians. Normalized emittance is emittance compensated for relativistic effects: $\varepsilon_N = \beta\gamma\varepsilon$ In a linear transport system, normalized emittance is a conserved quantity. Expressions of ε may or may not include π in the number.
Emittance, ε_s -Longitudinal	Attribute that describes beam envelope (bunch) properties in terms of changes in energy (ΔE) and either time (Δt), longitudinal phase($\Delta\varphi$), or distance (Δs).

Energy Recovery	Accelerator configuration whereby a beam is accelerated, performs work, and then is reinjected in to the linear accelerator 180° out of phase with the original beam. Energy gained by the acceleration is recovered in the deceleration process. This allows for a significant increase in RF power efficiency. It also has the effect that the beam power that must finally be dissipated in the beam dump is greatly reduced.
Energy Spread	For a bunch it is the difference in energy between the leading and trailing edges of the bunch. For the overall beam it is the total deviation in energy from the nominal value due to all sources of error. May be in terms of rms, Full width half-max (FWHM), peak, or peak to peak. Defined as $\frac{\Delta E}{E}$
EO	**E**lectro-**O**ptical (hardware) device that can modulate a laser beam using the piezo effect.
eP Chamber	**e**lectron-**P**roton (diagnostic) Device used to measure the absolute energy in Hall A.
EPICS	**E**xperimental **P**hysics and **I**ndustrial **C**ontrol **S**ystem (software) used as the main control system interface. Maintained by the EPICS consortium of several international labs.
eV, MeV, GeV	**E**lectron **V**olt – unit of energy equal to that gained by an electron that accelerates through a potential difference of one volt. 1eV = 1.602x10^{-19} Joule ($m^2 \cdot kg \cdot s^{-2}$) = 1.602x10^{-12} ergs = 4.451x10^{-26} kilowatt-hour **MeV**= Million eV **GeV** = Billion eV
Extraction	Region of the CEBAF accelerator between the south linac, the junction of the BSY and west arc where beam can be extracted for transport to the BSY, or recirculated for additional acceleration.
Faraday Cup	A device that when inserted in the beam, intercepts all beam current and dissipates the beam power. The cup is designed for maximum efficiency at a given energy. A Faraday Cup is electrically isolated so that all intercepted beam current can be measured using standard instrumentation. Because the Faraday Cup is electrically isolated and therefore has no real conduction cooling, it is typically used for beam powers of a few tens of kilowatts or less. The CEBAF accelerator uses Faraday cups in the injector and in Hall B.
FEL	**F**ree **E**lectron **L**aser (location/project) facility for generation of tunable wavelength high power CW laser beam. Uses an optical cavity to amplify and stimulate spontaneous emission from the synchrotron light generated by an electron beam passing through a wiggler. Uses an energy recovery superconducting linac to accelerate the electron beam. The laser light is presently IR up to 10kW. The present design will also support a 1kW UV laser.

FODO	**Fo**cus-**D**ef**O**cus method of transport system design that uses sets of quadrupoles in an alternating pattern to achieve desired phase space parameters.
FPGA	**F**ield **P**rogrammable **G**ate **A**rray (hardware/integrated circuit) device that is used to implement very complex and dense custom circuit designs. Can be programmed via a computer interface or specialty programming hardware. Most actually contain two sets of memory – one that contains the basic set up and program of the device in non-volatile memory which is then transferred to the much faster erasable memory at start-up for running the program of the chip.
FSAD	**F**inal **S**afety **A**ssessment **D**ocument – Document that quantifies hazards to personnel, the public, and the environment that could result from accelerator operations as well as the steps taken to mitigate those hazards. Official document where operations and safety envelopes are described.
FSD	**F**ast **S**hut**D**own system or event that will shut off the beam within 5 microseconds after a fault is detected.
FWHM	**F**ull **W**idth **H**alf **M**ax(imum) – measure of the boundary on a curve defined by two points on either side of the peak value, equal to half the peak value. In accelerators it is usually referring to points half the peak value of a Gaussian distribution curve. The range of the x values bounded by the FWHM on a Gaussian is $= 2\sqrt{2\ln 2}\,\sigma_X$ where σ_x is the standard deviation of the curve.[ii]
Gradient	Amplitude of the peak potential energy in an RF cavity. Measured in Force/distance, usually MV/m. Energy gain is $\Delta E = \ell E_0 \cos(\phi)$ where $\boldsymbol{\ell}$ is the cavity length, E_0 is the peak gradient, and ϕ is the phase of the beam arrival with respect to the accelerating RF. The power to achieve a given gradient in a RF cavity is proportional to the square of the gradient, i.e. twice the gradient requires four times the power.
Halo	Electrons traveling with, but outside of the nominal bunch envelope. Halo can be orders of magnitude lower in current that the main beam, however, it can still do bad things like heat beam pipe to the point of vacuum failure or cause false readings in experiment equipment.
Happek Device	A diagnostic that incorporates an interferometer to measure bunch length.
Harp (wire scanner)	A set of wires that are scanned through the beam to measure transverse beam profile. They typically use an x, y, and diagonal wire.

Helicity	A particle's spin orientation relative to the direction of it's momentum[iii]. When the spin is pointed in the same direction as its momentum, it has a positive helicity. Several CEBAF experiments flip the helicity of the beam between positive and negative and measure the difference in properties of the collisions.
Helios	(accelerator/project) Small synchrotron ring used to generate X-ray synchrotron light. Originally developed by Oxford Instruments for IBM and other semiconductor research facilities. JLab would like to use Helios for several research and development activities including pump-probe experiments.
HMI	**H**uman **M**achine **I**nterface – Computer controls and displays used by the operator.
HOM	**H**igher **O**rder **M**ode – frequencies at which RF fields may exist in a cavity structure. Usually very undesirable as they contribute to beam instabilities.
HPA	**H**igh **P**ower **A**mplifier (hardware) that amplifies low level RF control signals to the power required for acceleration. CEBAF HPAs are 5kW.
HVPS	**H**igh **V**oltage **P**ower **S**upply (hardware) used to provide high voltage (>600V) to numerous devices. Devices include the electron gun (100-500kV), BLMs (700V), Vacuum Pumps (1500V), and EO devices.
IF	**I**ntermediate **F**requency (attribute) product of combing fundamental frequency and local oscillator, e.g. 1497 MHz – 1427MHz = 70Mhz. The IF retains the phase and amplitude of the original signal.
Image Charge	A charge induced on the inside of the beam pipe equal to, and opposite in sign to, that of the beam in the pipe. Called image charge because in analysis it is easier to assume an equal and opposite charge outside the beam pipe and the beam pipe is a virtual ground. Many beam diagnostics are based on the measurement of the image charge. Control of image charge is a concern in high current accelerators where the image charge can stimulate undesired "wake fields" that affect following beam bunches.
Injector	The part of the accelerator that produces the beam and accelerates it to near the speed of light.
IOC	**I**nput **O**utput **C**ontroller (hardware) computer card that runs the EPICS control software in the field.
IOT	**I**nductive **O**utput **T**ube – High power amplifier tube that uses tuned cavities to input low power and extract high power RF. Unlike the klystron, RF cavities in an IOT are external and do not have to deal with dissipation of the beam current in the cavity. The RF is inductively coupled from the tube to the output cavity(s). The IOT is also referred to as the klystrode (hybrid klystron/tetrode) IOT. The CEBAF RF separators use IOTs as the 499MHz power amplifiers.

Isochronous	Attribute where all particles of momentum $\rho +/-\Delta\rho$ are transported through an arc and come out the other end at the same time. The CEBAF arcs must be isochronous in order to have beams of different energies recombine in the same space-time for multipass acceleration.
JLab	**J**efferson **Lab**oratory - Thomas Jefferson National Accelerator Facility. A Department of Energy research facility in Newport News, VA, managed by the Southeastern Universities Research Association. The main mission of JLab is to operate a 6GeV, 800kW recirculating linear accelerator, CEBAF, for theoretical physics research in to the nature of the quark model of matter. Other missions and facilities include the worlds most powerful infra-red Free Electron Laser (FEL), superconducting accelerator research, and high performance computing.
JTAG	**J**oint **T**est **A**ction **G**roup – (hardware/standard) standard connection and communication protocol (IEEE1149.1) used to interrogate and program JTAG compatible chips in situ on a circuit board. Allows one to "see" inside and test complicated integrated circuits like PLDs and FPGAs. Many new JLab digital circuit boards contain a JTAG front panel interface.
K	Wiggler/Undulator parameter – simplified factor that gives the boundary between whether a set of alternating magnet poles could be considered a wiggler or an undulator. $K = \frac{\lambda_u e\tilde{B}}{2\pi m_0 c}$ where λ_u is the period (distance) between magnetic poles in meters and $\tilde{B}$ is the maximum periodic field strength in Tesla. Simplifying in SI units gives $K = 93.33729\lambda_u\tilde{B}$. K can also be simplified as $K = \gamma\Phi$ where γ is the relativistic gamma and Φ is the maximum angle the transversely oscillating beam bunch makes relative to the longitudinal axis. Generally, if K is ≤ 1 then the angle is shallow enough that the emitted photons interact with themselves and form an interference pattern. This is the basis for an undulator. If K is > 1 then a broader spectrum is emitted and the light is not necessarily coherent from pole to pole. K > 1 is the basis for a wiggler.
Kicker	PSS/FSD device that will deflect the injector beam on to a water-cooled aperture if a PSS beam current or FSD fault occurs. Operates in less than 200μs.
Klystron	High power amplifier tube that works by coupling low level RF energy to a high power electron beam then extracts the modulated beam energy as RF again. Differs from the IOT in that the klystron beam traverses the input and output cavities and is dissipated in a collector that is physically part of the output cavity.

Lambertson	Three channel septum magnet located in the BSY used to separate beams between the three endstations. One channel of the magnet is biased for a negative deflection, the center channel has no deflection, and the last channel has a positive deflection.
Landau Damping	Transport lattice limit within which bunch instabilities will not grow. The "damping' comes from the fact that if you do not lose the beam as it is accelerated, the beam size will shrink due to relativistic effects.
Lattice	Computational representations of beam line elements, usually matrices, used to model beam transport properties.
LCW	**L**ow **C**onductivity **W**ater (hardware) deionized cooling water used to keep accelerator equipment systems at a constant temperature. It is deionized to prevent the water acting as a short circuit path when flowing through high power conductors.
LEM	**L**inac **E**nergy **M**anagement (software) software based system that has the ability to set the gradients of all linac RF systems to achieve maximum efficiency of operation. Constraints include max gradients, cryogenic capacity and acceptable arc trip rate. Theoretically allows one to dial in linac energy.
LINAC	**LIN**ear **Ac**celerator (accelerator system) straight section of the machine where beam energy is boosted by a chain of RF cavities. Each CEBAF linac contains 160 RF cavities and can boost the beam energy by 600 MeV.
LO	**L**ocal **O**scillator (hardware) device that generates a frequency that when mixed with the fundamental frequency, produces an intermediate frequency (IF). The process also works in reverse. A LO mixed with an IF will produce a fundamental frequency.
Longitudinal	Axis parallel to the direction of beam travel, z or s axis.
Longitudinal phase space	Attribute that describes beam transport properties in terms energy (ΔE) and longitudinal phase ($\Delta\varphi$) with respect to the acceleration frequency. Used to describe RF buckets and longitudinal emittance.
LSS	**L**aser **S**afety **S**ystem (hardware) system that provides protection from inadvertent laser operation during personnel access to a controlled cabinet or area.
Luminosity	Parameter of colliding beam accelerators that defines the number of particle collisions in a given space and time. Measured in particles per unit area per unit time. Greater than 10^{32} $cm^{-1}s^{-1}$ is a good number.
M56 (R56)	Lattice matrix element 5-6 $\left(\ell \cdot \frac{\Delta p}{p_0}\right)$ that describes dispersion with respect to momentum. Defined as $\int \frac{D_{x,y}}{\rho} ds$

Machine Mode	(FEL operations) Setup of the FEL machine protection system describing the transport systems and beam dumps required to safety transport the beam to a designated termination point. Machine elements that are not part of the current machine mode may be automatically bypassed. Beam Mode uses this information to automatically determine the maximum electron beam duty factor and current.
Macropulse	Parameter that describes the portion of the duty factor that the beam is ON. A macropulse may be composed of micropulses modulated at submultiples the RF frequency of the accelerator. Measured in units of time. An example of a macropulse is the CEBAF tune beam which is 254.2 μs long.
Magnetic Rigidity	Factor used to express the magnetic field (B) and associated bending radius r in that field for a charged particle at a given kinetic energy. $Br = \frac{mv}{e} = \frac{m_o c}{e}\sqrt{\left(\frac{E_k}{E_o}\right)^2 + 2\left(\frac{E_k}{E_o}\right)}$ Tesla-meters
Match/Matching	Adjusting the phase space parameters of a beam to fit within the acceptance of a transport section.
MCC	**M**achine **C**ontrol **C**enter (location) where an operations crew run the CEBAF accelerator.
MEDM	**M**otif **E**ditor **D**isplay **M**anager (software) main display software used to build all EPICS screens.
Micropulse	Parameter that describes a bunch length in units of time. A train of micropulses make up the macropulse. The CEBAF and FEL micropulse is less than 1 degree of 1497 MHz, or < 2 picoseconds.
Mirror Can	Part of the optical transport where a mirror is placed to turn the laser beam through some angle.
m_o	Rest mass of particle. m_o of an electron is $9.1093897 \times 10^{-31}$ kg or 0.5109906 MeV/c^2.
MO	**M**aster **O**scillator (hardware) system that provides and distributes the master reference frequencies for RF, LO, and IF.
Moeller (Møller) Polarimeter	Device used to measure the collective polarization ratio of the beam by measuring the difference in scattering angle from a magnetically polarized target.
Mott Polarimeter	Device used to measure the collective polarization ratio of the beam by measuring the difference in scattering angle from a thin foil of dense material such as gold.
MPS	**M**achine **P**rotection **S**ystem (software/hardware) that protects equipment from damage by beam operations. Includes the BLM, BCA, and FSD systems.

Multislit	A diagnostic that incorporates a parallel array of wide slits used to measure the transverse emittance of a beam. Beam bunches traverse slits in a plate. The size and divergent properties of the resulting pattern (n, n') are measured with a detection device such as an OTR, viewer, or harp. From this data, the emittance and other Courant-Snyder properties can be calculated.
Nanoamp BPM	(diagnostic) composed of three sensitive RF cavities, x, y, and I that measure the position of beam currents down to 1 nA.
ND Filter	**N**eutral **D**ensity optical filter used to attenuate the drive laser intensity and resulting beam intensity.
NPES	**N**uclear **P**hysics **E**xperiment **S**cheduling **C**ommittee – Body responsible for establishing the long term schedule for the CEBAF accelerator program.
ODH	**O**xygen **D**eficiency **H**azard (situation) where the measured partial pressure of the oxygen in air is less than 19.5%.
Operations Envelope	Parameter space within which the accelerator may be operated safely. More conservative than the Safety Envelope to ensure that the Safety Envelope is not challenged. Operations envelopes are given in the FSAD and the EH&S manual chapter 6311-T1.
Ops PR	**Op**erations **P**roblem **R**eport (software) used to record and assign problems with equipment, procedures, or software.
Optical Cavity	Pair of mirrors which form an optical resonator to trap the light emitted by the electron beam traversing a wiggler, then send it back on the electron beam for amplification, and to allow it to build to high power or saturated levels. When the light in the optical cavity is exactly in sync with the electron beam, stimulated emission, i.e. lasing, can take place. This is the lasing mechanism of an FEL.
Optical Transport	A system of evacuated piping and mirror cans to contain the Drive and FEL lasers.
OSP	**O**perating **S**afety **P**rocedure (document) used for assessing hazards and mitigation steps for continuing tasks that are not adequately covered by other procedures, e.g. SOP, and/or the EH&S manual. An OSP differs from an SOP in that the focus of an OSP is on the hazards and mitigations, as well as the quality assurance needed to achieve the required risk reduction. SOPs contain specific procedures for conducting the work in addition to safety related information. If the work is not performed frequently, a Temporary Operations Safety Procedure (TOSP) may be the better choice. More information on OSPs is available in the EH&S manual chapter 3310.
OTR	**O**ptical **T**ransition **R**adiation – Device used to view beam by placing a thin foil in the beam path and viewing the light produced as the beam passes from the vacuum to the material.

p (Momentum)	Momentum $p = mv \quad \frac{GeV}{c}$ When v ≅ c then $p = \frac{E}{c}$ In operation, the concern is the momentum spread $\frac{\Delta p}{p}$
Parmela	Particle-in-cell (PIC) code that simulates beam generation and transport.
Path Length	The distance beam travels in one pass around the CEBAF accelerator. Path length is independently adjustable for each pass in order to allow proper recombination of each pass before acceleration in the linacs[1]. The path length of the CEBAF machine at 4GeV is approximately: Pass 1 4.37890895 μs Pass 2 4.37474950 μs Pass 3 4.37341349 μs Pass 4 4.37274591 μs Pass 5 is not a complete end-to-end recirculation so it does not have an equivalent time. In reality, the linac phases are set for peak acceleration of the first pass beam. The path length of the higher passes is then adjusted so that, when recombined, they too ride the crest of the linac accelerating field. The average time of flight of the CEBAF machine gives a revolution frequency of 228,584.2 Hz.
Phase Space	Representative spatial coordinates that describe the real and divergent properties of a particle or lattice. In Cartesian coordinates, phase space is represented by position and velocity, e.g. x,x';y,y'.
Photocathode	Material used to generate electrons when illuminated by light. The JLab electron guns use photocathodes illuminated by lasers to generate the beam.
Picomotor	A stepper motor used to make very small mechanical adjustments to optical systems.
PID	**P**roportional **I**ntegral **D**erivative (control function) General purpose feedback and control algorithm that can be tuned for a myriad of applications. P controls response to step change, I controls steady state error, and D controls settling time and stability.
Plasma	Atoms in a highly charged gas like state such that the outer shell electrons are stripped and separate from the ionized nucleus.
PLC	**P**rogrammable **L**ogic **C**ontroller (hardware) dedicated industrial computer and I/O system used for highly reliable control and measurement of field devices. Originally developed for factory control.

[1] This is a fundamental difference between a recirculating linac and a microtron.

PLD	**P**rogrammable **L**ogic **D**evice – (hardware) General term for a digital integrated circuit that can be programmed to perform user defined logic functions. The internal structure is different than that of a field programmable gate array (FPGA).
Polarimeter	Device that measures collective spin polarization of electron beam. Polarimeters used at JLab include the Compton, Mott, and Moeller.
Polarized Source	The portion of the CEBAF injector that generates the initial electron beam. The polarized source uses three separate lasers to generate a separate beam to each of the three CEBAF endstations. Each laser is mode locked to the master oscillator frequency to generate laser pulses in sync with the RF accelerating systems. Polarization is a function of the type of photocathode material and laser quality. The CEBAF polarized source generates polarizations of 70-85%.
Program Deputy	(position/title) Serves for two weeks to manage the short term CEBAF accelerator schedule. Works with the Crew Chief, Run Coordinators, Operability Manager, Operations Department Head, and other personnel as needed.
PSS	**P**ersonnel **S**afety **S**ystem (software/hardware) system of access control, interlocks, and warning devices dedicated to personnel protection from hazards associated with accelerator operation.
Pump-Probe	(FEL application) Stimulus-Response method of observing the dynamic behavior of a material when exposed to FEL laser beam (pump) by using the Helios X-Ray light as a means to illuminate (probe) the sample.
Q	**Q**uality factor – ratio of energy stored to energy dissipated in a closed system. Typical Q of a copper RF cavity may be 10,000. Typical Q of a SRF cavity is 2 billion. Different values for Q are given. Unloaded Q_0 is the Q of the cavity alone. External Q_e is the energy dissipated in a circuit connected to a cavity. Loaded Q_l is the inverse sum of the unloaded and external Qs. $\frac{1}{Q_l} = \frac{1}{Q_0} + \frac{1}{Q_e}$ For example, the loaded Q of a JLab SRF cavity is over 5 million.
QCD	**Q**uantum **C**hromo**d**ynamics – quark theory of matter that is one basis for the standard model of physics. Matter is made up of quarks and leptons and their anti-particle compliments. Force particles (bosons) exchange energy between and bind the particles. Attributes of quarks, represented by "color" (chromo), are exchanged and conserved to balance the system. Lattice QCD (LQCD) is a follow on theory that uses discrete units of space-time instead of a continuum.

QE	**Q**uantum **E**fficiency (attribute) of photocathode wafers that measures the ratio of electrons produced per incident photon on the wafer surface. Also can be applied to photomultiplier tubes like those used in the BLMs.
Quadrupole	Four-pole magnet with radially alternating North-South poles used to focus beam in one transverse plane. The orthogonal plane will defocus, e.g. x plane focus will defocus the y plane. Multiple quadrupoles are used in lattice sets called FODO to focus in both planes. The convention is to use the x plane as the reference, i.e. a "focusing quadrupole" focuses in the x direction and defocuses in the y. A "defocusing quadrupole" defocuses in the x plane and focuses in the y.
Rads	Radiological unit of energy dissipated in a material of mass m. Also called "absorbed dose." The SI unit is the Gray, (J kg^{-1}) which equals 100 rads. In m-k-s units a Rad or Gray is equivalent to specific energy $\frac{m^2}{s^2}$. The dose to people is measured in rem.
Radiation Length, χ_0	Mean thickness of a material over which a high energy electron loses $1-e^{-1}$ of its energy by bremsstrahlung. Maximum energy deposition in a material generally occurs after 3-4 radiation lengths then tapers off. χ_0 is not a strong function of energy.
Raster	Magnet used to scan the beam across an area in order to disperse the heat generated by the beam interception. Rasters are generally used for targets and beam dumps.
RBM	**R**adiation **B**oundary **M**onitor (hardware) Radiation monitor located at site boundaries used to record background and operations dose and dose rate.
RCG	**R**adiation **C**ontrol **G**roup (location/group) that provides radiological support for all JLab operations.
Recombiner	Region of the north and south linacs where separate beams from the exit of the arcs are recombined for reinsertion in to the linac.
Rem	Radiological unit of energy dissipated in biological mass m. Also called "dose equivalent." The rem is a measure of the damage done to tissue by a given type of particle relative to that of 200keV photons.[iv] The SI unit is the Sievert, (J kg^{-1}) which equals 100rem. Rem is obtained by multiplying adsorbed dose, rad, by a quality factor Q_r, where Rem = Q_r*Rad. The Q_r is determined by measurement and calculations and is provided by standard bodies such as the ICRP.
RF	**R**adio **F**requency (electromagnetic band) typically defined as frequencies between 300 MHz and 3GHz.
RFCM	**RF C**ontrol **M**odule – (hardware/software) system that sets and regulates the gradient and phase of each cavity gradient. RFCMs also contain diagnostic and interlock functions to protect the cavity and HPA.

RFQ	**R**adio **F**requency **Q**uadrupole (accelerating cavity) structure that uses four long, thin vanes inside a resonant cavity. When RF power is applied, a longitudinal gradient develops between the vanes as well as a transverse focusing field. Used mainly in injectors of heavy particle accelerators when the velocity of the particle is much less than c. The SNS uses an RFQ to preaccelerate the beam before injection in to the DTL.
RIA	**R**are **I**sotope **A**ccelerator – Accelerator project that can accelerate ions from hydrogen to uranium and then separate out the isotopes produced when the primary beam interacts with a target material. An interesting part of this is a RFQ post-accelerator after the isotopes are produced. JLab has designed prototype superconducting cavities for portions of the linear accelerator.
Run/Safe Box	Yellow PSS box placed in the tunnel used for three purposes. Search and secure key station during sweeps Visible display of tunnel safe/unsafe state Emergency crash station
Safety Envelope	Parameter space within which the accelerator may be operated safely, however beyond which may lead to endangerment to personnel or the environment. Safety envelopes are given in the FSAD and the EH&S manual chapter 6311-T1.
SASE	**S**elf **A**mplified **S**timulated **E**mission – (FEL accelerator) Machine that uses very long undulators in the beam path to create and amplify very high frequency light (e.g. X-Ray) without the need for an optical cavity. Avoids the problems associated with a mirror that can efficiently reflect X-ray wavelengths.
S-CAM	**S**ervice Building **C**atch-**A**ll **M**odule, Board that provides beam modulation and timing signals for the CEBAF accelerator.
SEE (BPM)	**S**witched **E**lectrode **E**lectronics – (diagnostic) BPM system that uses a multiplexer to sample signals induced on each of four BPM wires (electrodes). SEEs are subdivided in to fast (Linac) and slow (transport) BPMs. The linac SEEs have the ability to distinguish the position of each individual pass in the CEBAF linacs.
(RF) Separator	A RF cavity designed to dynamically give the beam a transverse kick. The magnitude of the kick depends on the magnitude and phase of the RF in the kicker cavity to that of the time of arrival of the beam bunch. The CEBAF RF separators are used to separate the beam bunches for each endstation by kicking them towards the appropriate endstation and/or to the next higher energy pass in the accelerator. After the fifth and highest pass, the RF separator can deflect each beam bunch to any of the three endstations, e.g. A,B,C,A,B,C… . The separator works in unison with the injector polarized source and chopper system to determine which bunches, and therefore beam current, is distributed to each endstation. The deflection of the RF separators is week and requires the use of a septum magnet downstream to magnify the kick.

Septum (Septa)	Magnet with two or more channels used to separate or combine beams by providing a different deflecting field in each channel.
Sextupole	Six-pole magnet with alternating north and south poles used to correct for focusing dependence on momentum spread, called chromaticity.
Siberian Snake	A spin rotator able to change the polarization of a collective beam by up to 180 degrees while maintaining the design optic's tune.
SIL (Safety Systems)[v]	**S**afety **I**ntegrity **L**evel – IEC Standard based quantification of the probability of unsafe failure of a safety function.

SIL Level	Low Demand Mode PFD	Continuous Operation PF h^{-1}
SIL1	$1x10^{-1}$ to $1x10^{-2}$	$1x10^{-5}$ to $1x10^{-6}$
SIL2	$1x10^{-2}$ to $1x10^{-3}$	$1x10^{-6}$ to $1x10^{-7}$
SIL3	$1x10^{-3}$ to $1x10^{-4}$	$1x10^{-7}$ to $1x10^{-8}$
SIL4	$1x10^{-4}$ to $1x10^{-5}$	$1x10^{-8}$ to $1x10^{-9}$

Skew Quad	(hardware) Quadrupole magnet rotated 45 degrees around the beam pipe used to correct for coupled (both x and y) beam transport problems.
SLI	**S**ynchrotron **L**ight **I**nterferometer **–** Hardware/Software based diagnostic used to measure the relative energy spread of a dispersive beam.
SLM	**S**ynchrotron **L**ight **M**onitor (hardware) used to view synchrotron radiation emitted when the beam is bent in the spreaders or arcs. Good diagnostic for beam instabilities.
SNS	**S**pallation **N**eutron **S**ource – 1GeV proton accelerator being build in Oak Ridge TN designed to produce large quantities of collimated neutrons for materials research. JLab is building the superconducting accelerator cryomodules.
Solenoid (Lens)	Magnetic focusing element that uses a solenoidal (doughnut) magnet mounted around the beam pipe to focus the beam much like a convex optical lens. This type of magnet is not physically practical for high energy beam, ergo the use of sets of quadrupoles.
Song Sheet	Tunnel equipment location drawings.
SOP	**S**tandard **O**perating **P**rocedure (document) that defines the steps required to carry out a procedure or operation. An SOP is more comprehensive than an OSP in that it contains not only safety information, but also other steps required to perform the task in it's entirety including actual work procedures and quality assurance information. SOPs are usually in force indefinitely but should be reviewed annually or when a part of the process or work environment changes. Information available in the EH&S manual chapter 3310.

Spin (Spin Angular Momentum)	A quantum property of particles related to their motion and behavior in the presence of forces such as magnetism. The magnitude of the spin momentum is in quantum units defined by Plank's constant $\hbar = \frac{h}{2\pi}$ J-s. $S = \sqrt{s(s+1)}\hbar$ [vi] where **s** is the quantum spin number of the particle (0, ±1/2, ±1, ±3/2,…). When the spin momentums of collective particles are aligned, the resulting beam is termed "polarized".
Spin Dance	Procedure whereby the beam polarization is rotated through several angles and the resulting polarization measured, usually both in the injector and endstations.
Spreader	Region of the end of the north and south linacs where beam is vertically separated by energy in to separate beam lines for transport around the arcs.
SRF	**S**uperconducting **R**adio **F**requency – Technology that uses RF structures that operate in the superconducting mode, typically below 2 Kelvin. The RF power required to establish a high gradient in a superconducting cavity is reduced by several orders of magnitude over that required for the same gradient in a normal conducting cavity.
SSO	**S**afety **S**ystem **O**perator (person/title) Person that is trained and certified to monitor and control personnel safety system equipment and access controls.
Strip Tool	Software program that records selected EPICS signals in real time.
SWIS	**S**ite-**W**ide **I**nformation **S**ystem (hardware/software). Name for the TV monitors around the site that show accelerator status.
Synchrotron Radiation	Electromagnetic radiation (photons) emitted when an external force deflects a charged particle, usually associated with bending regions.
Tagger	System that is used to indirectly measure the energy of photons created when an electron beam interacts with a target. Electrons that interact with the target produce photons that are at a lower energy than the primary beam. The energy of the electrons is measured by measuring the amount of deflection in a strong magnetic field. This energy is used to "tag" the photons with the electron that created them.
Tcl/Tk (Tickle)	**T**ool **C**ommand **L**anguage/**T**ool **k**it (software) scripting language that can be used to combine programs written in several computer languages and operating systems.
Telescope	A pair of lenses that image the aperture of the Drive Laser beam onto the Gun photocathode.
Ti-Sapphire	(laser) Titanium doped Sapphire crystal based laser. Used as the laser source for the high current beams to CEBAF Halls A and C.

TOSP	**T**emporary **O**perational **S**afety **P**rocedure (document) used for assessing hazards and mitigation steps for short term tasks that are not adequately covered by existing procedures or documentation. Information available in the EH&S manual chapter 3320.
Transverse	Plane perpendicular to the direction of travel of the beam. x=horizontal, y=vertical.
Tune Up Beam	Duty factor limited beam current used to steer beam through the accelerator before switching to CW mode. Tune beam is enough for most instrumentation to see but not enough to damage the accelerator if it beam is lost. The CEBAF tune beam is composed of two pulses repeated at a 60 Hz rate. The first pulse is 250 us followed by a 100us off time, then a 4.2 us follow on pulse. The 4.2 us pulse is equal to the path length of one circuit of the CEBAF accelerator. Linac SEE BPMs can detect the time difference between each pass and thus distinguish the position of each pass in the linacs.
Undulator	Group of magnets with alternating poles longitudinally arranged along a narrow gap and the parameter K is ≤ 1. Used to bend beam in a sinusoidal path in order to generate synchrotron light. The magnetic poles of an undulator are carefully arranged to produce light that is coherent from pole to pole, unlike a wiggler. Therefore, the light spectrum from an undulator is concentrated in to several discrete frequencies.
USPAS	**U**nited **S**tates **P**article **A**ccelerator **S**chool – Organization dedicated to the advancement of accelerator science and education. The USPAS is managed out of offices at Fermilab in Chicago and holds courses twice a year at sponsor universities.
U-Tube	Cryogenic connection between a cryomodule and the cryogenic supply and return lines.
VESDA	**V**ery **E**arly **S**moke **D**etection **A**pparatus (fire detector) system that samples air in tunnels and provides alarms if minute amounts of smoke are detected.
VHDL (HDL)	**V**HSIC **H**ardware **D**escription **L**anguage – (firmware synthesis) programming language used to define functions in programmable logic devices. Increasingly used to define the programming of very complex integrated circuits. [VHSIC is Very High Speed (or Scale) Integrated Circuit.]
Viewer	Ceramic disc coated with photo luminescent material that is inserted directly in to the beam path. The resulting image is viewed with a video camera. Viewers can only operate at low beam power. If an image is required at high power, an optical transition radiation (OTR) monitor is used.
VME	**V**irtual **M**achine **E**xtension (hardware) standard that defines physical, electrical, and signal properties for electronic cards and the rack they plug in to. Used as the standard for JLab EPICS field controls. An alternate source for the name is the **V**ersa**M**odule **E**urocard for the product name of the original boards first developed by Motorola.

VTA	**V**ertical **T**est **A**rea – facility within the test lab used to perform R&D and performance testing of superconducting cavities before assembly in to cryomodules.
VXI	**V**ME E**X**tensions for **I**nstrumentation (hardware) standard that defines physical, electrical, and signal properties for VME cards that have extra shielding, power supply filtering, and dedicated P2 signals needed for analog signal processing using the VME format.
Wake Field	Electromagnetic field induced by moving charges in a beam pipe. Problem comes when they hang around after the bunch has passed. In high current accelerators, wake fields can be intensive enough to break up ensuing bunches. Can be viewed as an impedance (inductive/capacitive) to beam current.
Wien Filter	Injector device used to set the polarization angle of the beam. Ideally rotates longitudinal polarization without affecting beam position or velocity.
Wiggler	Group of magnets with alternating poles longitudinally arranged along a narrow gap and the parameter K is > 1. Used to bend beam in a sinusoidal path in order to generate synchrotron light. The light generated by bending electrons at each pole in a wiggler is not necessarily coherent, like that in an undulator; therefore the light spectrum from a wiggler covers a broad area.

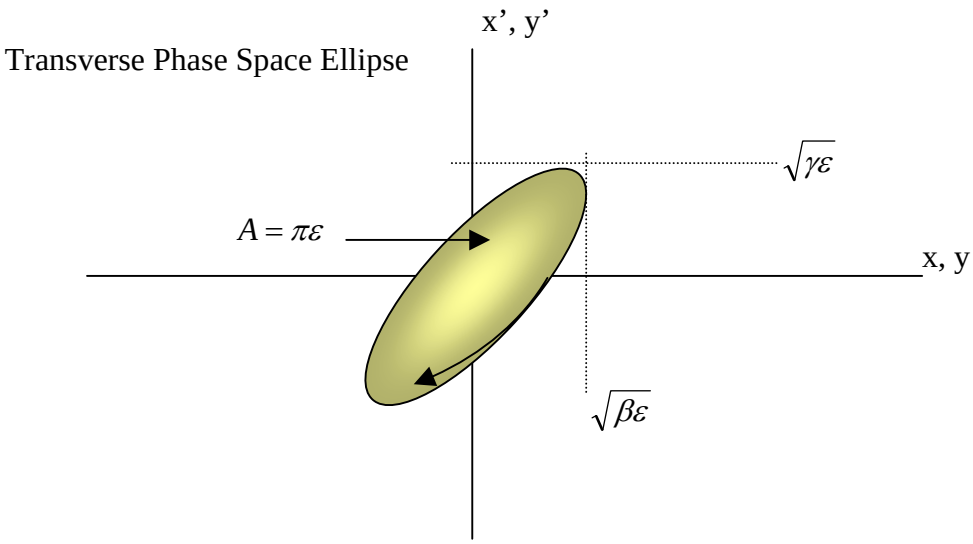
Transverse Phase Space Ellipse
x', y'
$\sqrt{\gamma\varepsilon}$
$A = \pi\varepsilon$
x, y
$\sqrt{\beta\varepsilon}$

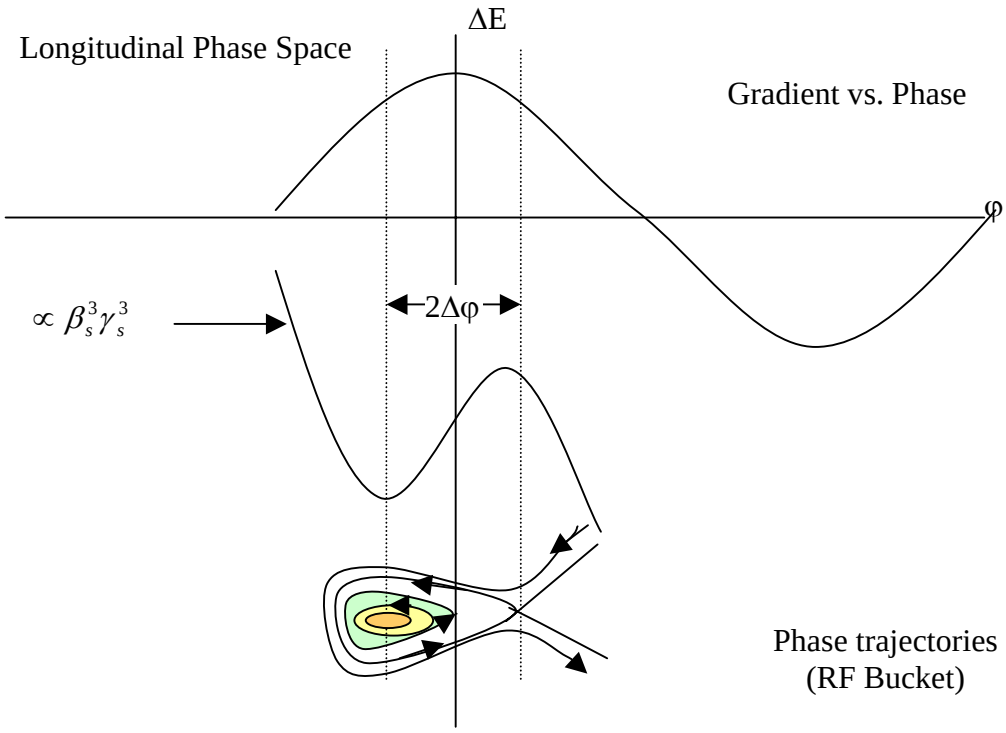
Longitudinal Phase Space
ΔE
Gradient vs. Phase
φ
$\propto \beta_s^3\gamma_s^3$
2Δφ
Phase trajectories
(RF Bucket)

Accelerator Glossary

Rev. 1.4
Revised February 27, 2004

Transport Matrix[Error! Bookmark not defined.]

The transport matrix represents the phase space of a particle or bunch at point s.

$$X(s) = \begin{bmatrix} x(s) \\ x'(s) \\ y(s) \\ y'(s) \\ l \\ \left(\frac{\Delta p}{p_0}\right) \end{bmatrix} \qquad \text{where } n'(s) = \frac{dn}{ds}$$

Transform Matrix[Error! Bookmark not defined.]

The transform matrix represents machine elements such as dipoles or quadrupoles. A chain of transform matrices form a lattice.

$$R = M = \begin{bmatrix} M_{11} & M_{12} & M_{13} & M_{14} & 0 & M_{16} \\ M_{21} & M_{22} & M_{23} & M_{24} & 0 & M_{26} \\ M_{31} & M_{32} & M_{33} & M_{34} & 0 & M_{36} \\ M_{41} & M_{42} & M_{43} & M_{44} & 0 & M_{46} \\ M_{51} & M_{52} & M_{53} & M_{54} & 1 & M_{56} \\ 0 & 0 & 0 & 0 & 0 & 1 \end{bmatrix}$$

Once the transport matrix is known in any part of the machine, it can be calculated for other part. The emittance measurement is usually the way the initial transport matrix is determined.

$$X(s+l) = RX(s) = \begin{bmatrix} M_{11} & M_{12} & M_{13} & M_{14} & 0 & M_{16} \\ M_{21} & M_{22} & M_{23} & M_{24} & 0 & M_{26} \\ M_{31} & M_{32} & M_{33} & M_{34} & 0 & M_{36} \\ M_{41} & M_{42} & M_{43} & M_{44} & 0 & M_{46} \\ M_{51} & M_{52} & M_{53} & M_{54} & 1 & M_{56} \\ 0 & 0 & 0 & 0 & 0 & 1 \end{bmatrix} \begin{bmatrix} x(s) \\ x'(s) \\ y(s) \\ y'(s) \\ l \\ \left(\frac{\Delta p}{p_0}\right) \end{bmatrix}$$

RF

Power for JLab 5 cell cavities

The wall losses of a cavity are: $P_0 = \frac{E_{acc}^2}{\alpha^2 Q_0}$

Where α = is the form factor for a specific cavity geometry

Forward Power for superconducting RF cavity[vii]

$$P_f = \frac{E_{acc}^2}{\alpha^2 Q_0} \cdot \frac{(K + \beta_1 + \beta_2)}{4\beta_1} \cdot (1 + \nu^2)^2$$

E_{acc} = Acceleration gradient in MV/m

α = form factor for cavity = 4.424×10^{-5} for JLab 5 cell cavities. The units are $\frac{MeV}{m\sqrt{W}}$

The beam loading term $K = 1 + i_0 \frac{\alpha^2}{Eacc} Q_0 l$

ν=detuning factor=$\frac{Q_0}{K + \beta_1 + \beta_2} \cdot \frac{2\Delta f}{f_0}$

β_1=input coupling factor
β_2=probe coupling factor

[2] Simrock dissertation 2/1988 pp61

RF Feedback and control system.

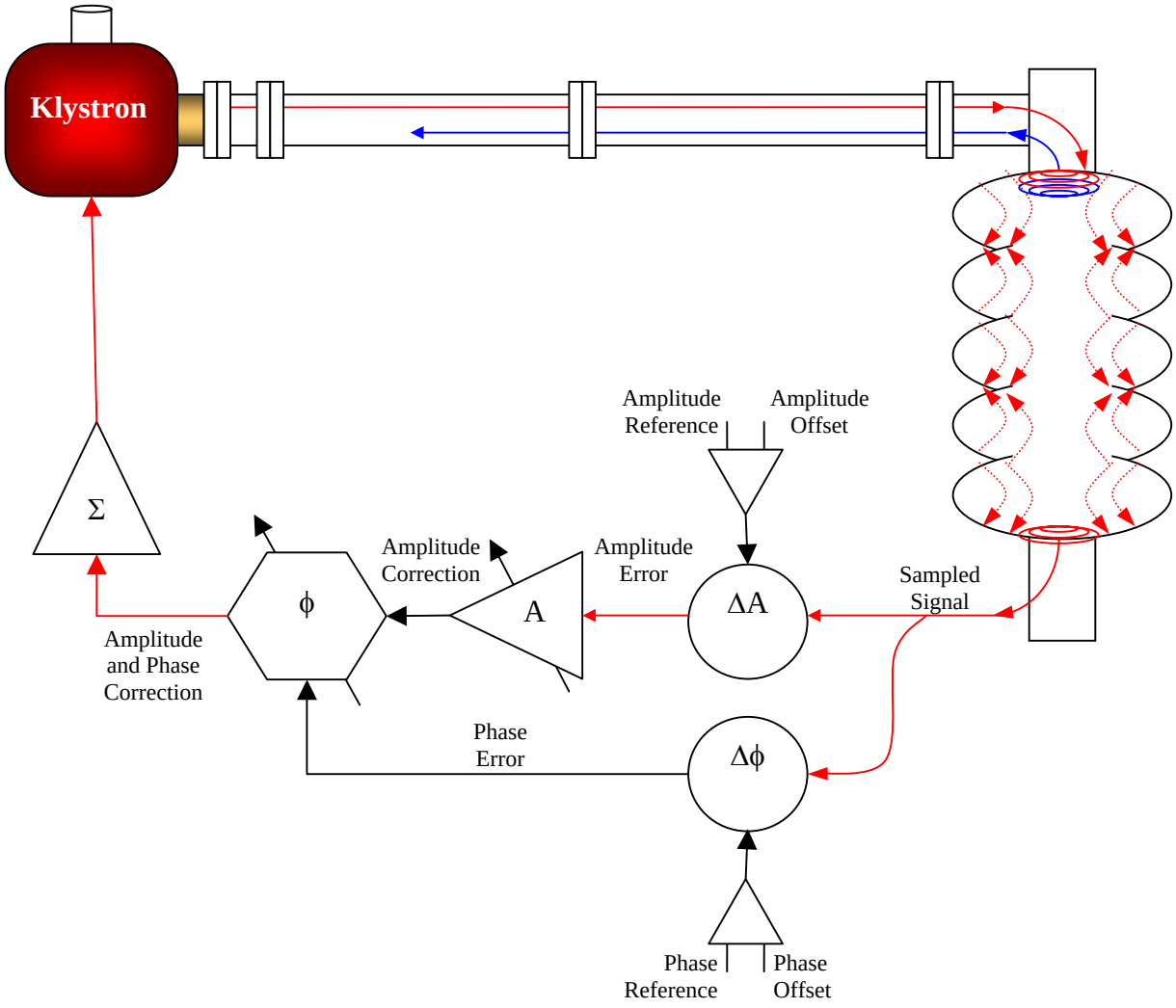

---

[i] A. Chao, M. Tigner; Accelerator Physics and Engineering; World Scientific 1999
[ii] Eric W. Weisstein. "Gaussian Function." From *MathWorld*--A Wolfram Web Resource. http://mathworld.wolfram.com/GaussianFunction.html
[iii] http://scienceworld.wolfram.com/physics/Helicity.html
[iv] J. D. Cossairt, "Radiation Physics for Personnel and Environmental Protection", pp 1-1, revision 5A, 2002, Universities Research Association.
[v] K. L. Mahoney, "Systems Safety and Safety Systems", USPAS course material on "System Safety and Safety Systems", 2003.
[vi] http://scienceworld.wolfram.com/physics/
[vii] S. Simrock, dissertation 2/1988 pp61

Other sources:
W. Scharf, Particle Accelerators and Their Uses, Volumes I and II, copyright 1986 OPA Ltd.
P. Lapostolle, ed., "Linear Accelerators", North-Holland Publishing Company, 1970

Additional Contributors:
Michael Spata, JLab Operations Group Leader

Special Thanks to Mike Correa for compilation and conversion to pdf format for posting on the web.