HALL-A PHYSICS PROGRAM A STATUS REPORT

PAC 17

JANUARY 26-28, 2000

KEES DE JAGER

JEFFERSON LABORATORY

OVERVIEW

APPROVED EXPERIMENTS PAC4-16

	Number	Days to be run	Polarized beam	A status	Days run
Nucleon and Meson Form Factors/Sum Rules	7	119	6	2	47
Few Body Nuclear Properties	12	221	4		73
Properties of Nuclei	4	60	1		20
N* and Meson Properties	6	128	4	2	18
Strange Quarks	4	202	2	2	42
Total	33	730	16	6	200
Conditionally Approved	5				

- Ten experiments COMPLETED (five partially)
  - will provide 25 graduate theses (first 6 graduations)
  - Three publications in PRL

Beam Line Instrumentation

- Energy measurements
  - * (e,p) scattering and ARC system operational
- ➟ OTR-monitor (for ΔE-measurement) operational
- Møller polarimeter reliable operation
  - * careful calibration of foil magnetization
  - * quad power supplies being replaced
  - * two additional quads installed on beam line
- ➟ Compton polarimeter significant progress
  - * preliminary results on polarization
- Careful study of BCM calibration

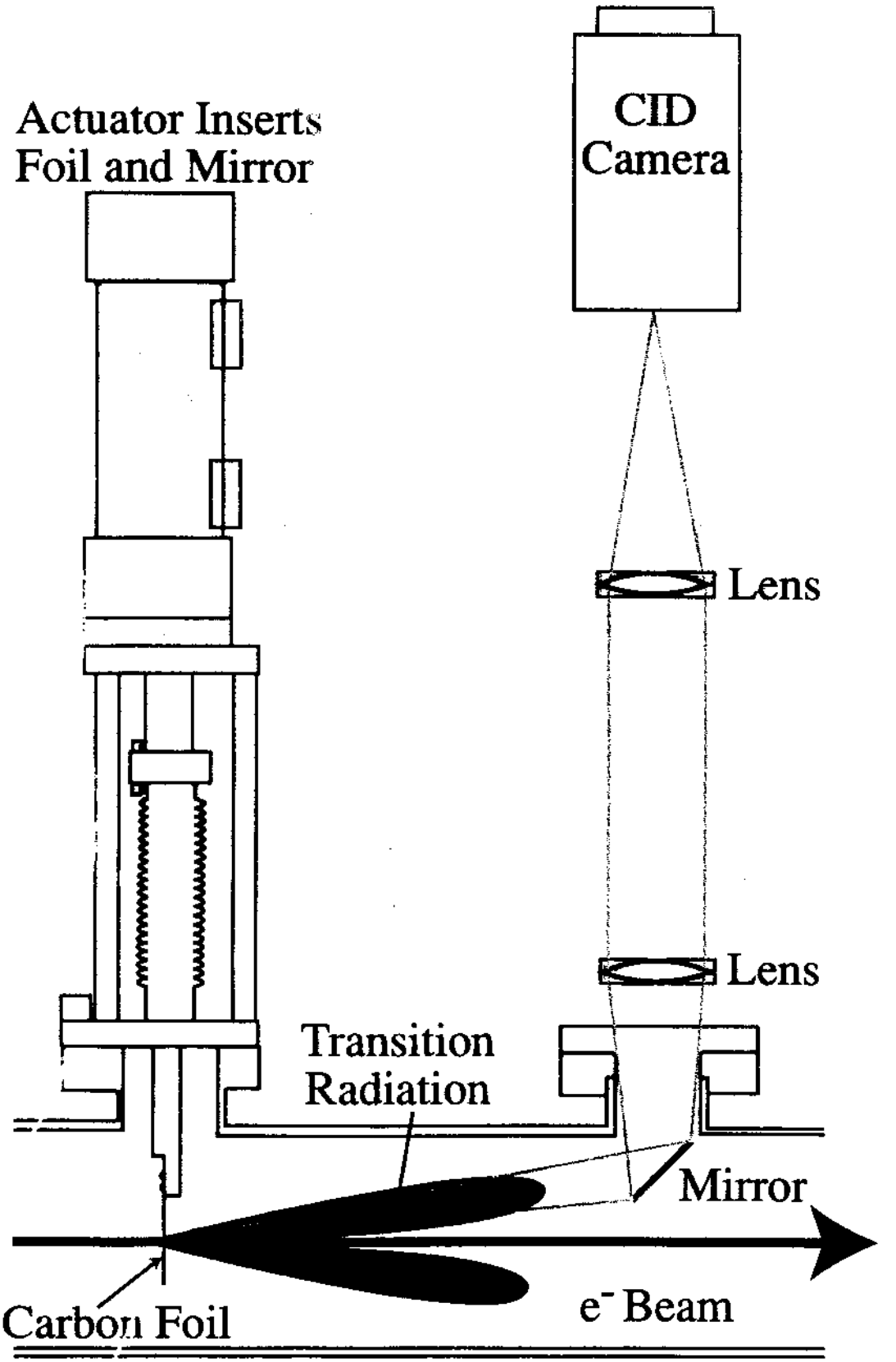

FORWARD OTR MONITOR

Eng # 95569 HALL A OTR: 5μA cw Achromatic D 5, 1999

Demand

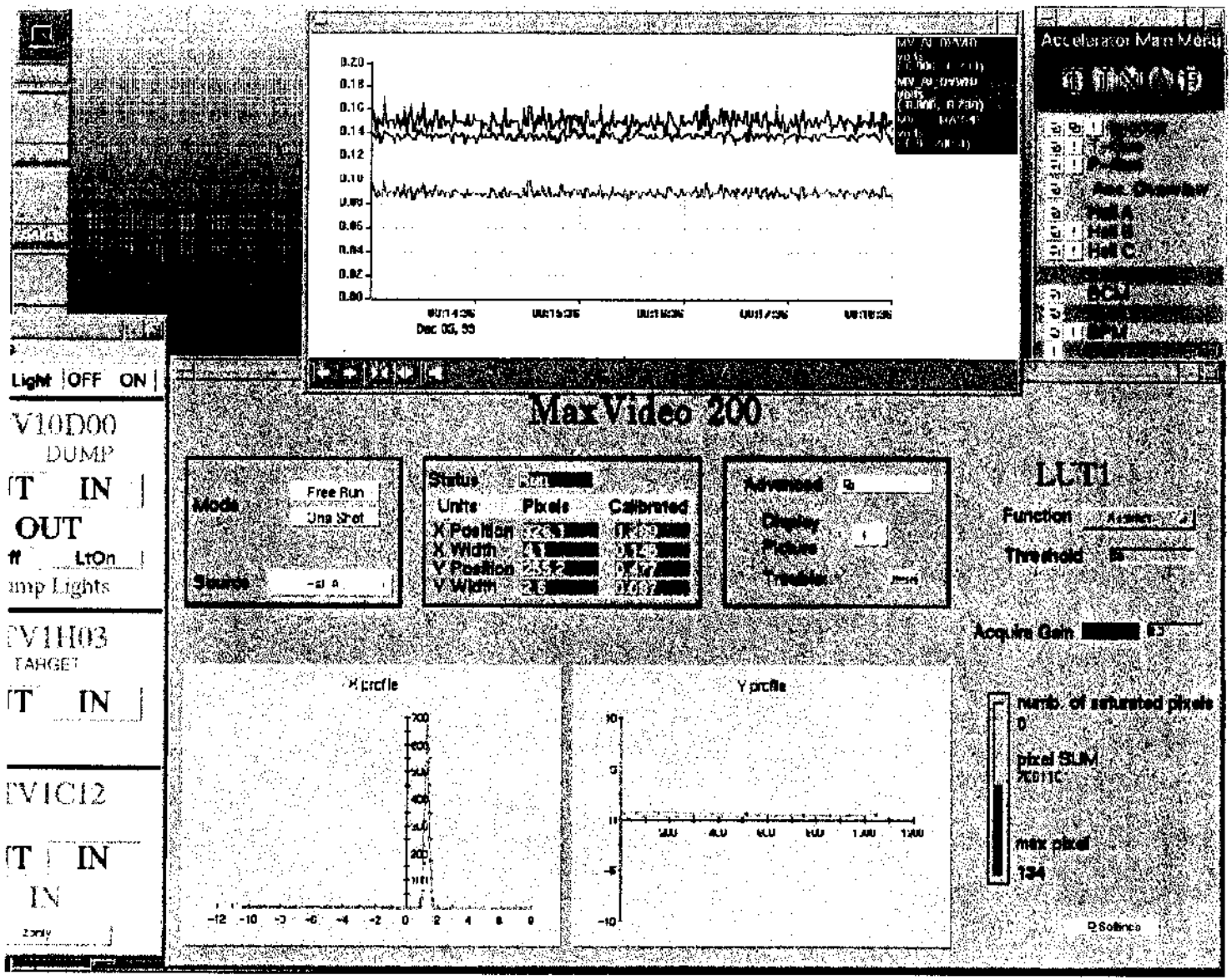

$\Delta x = 145\mu m$

$\Delta y = 87\mu m$

$$\Delta x = \left\{ \left(\eta \frac{\Delta p}{p}\right)^2 + (\beta\epsilon)^2 \right\}^{1/2}$$

$\beta\epsilon \sim 100\mu m$

$\eta \frac{\Delta p}{p} \sim 100\mu m$

For $\eta \Rightarrow 4m$ $\frac{\Delta p}{p} \rightarrow 2 \times 10^{-5}$

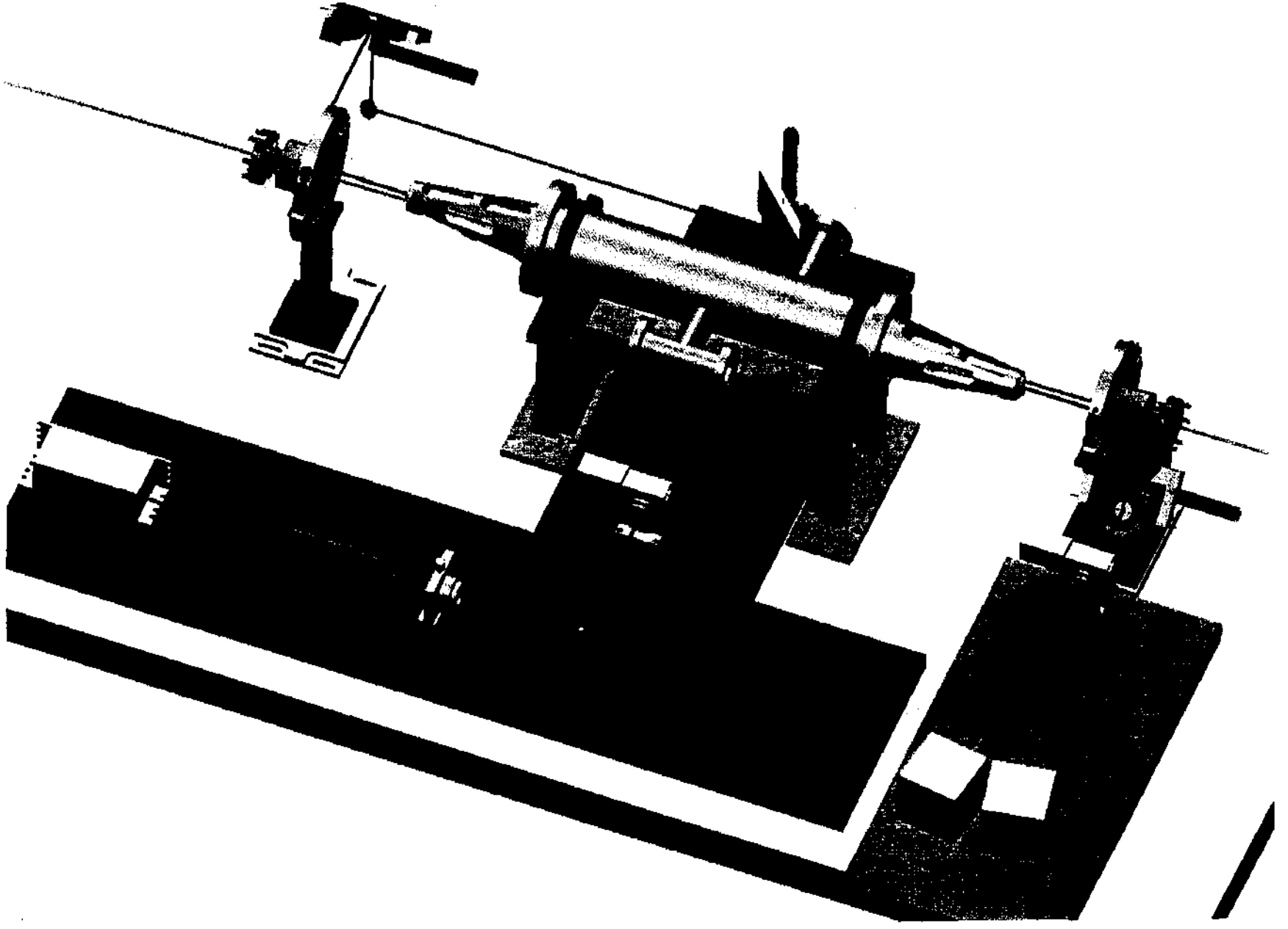

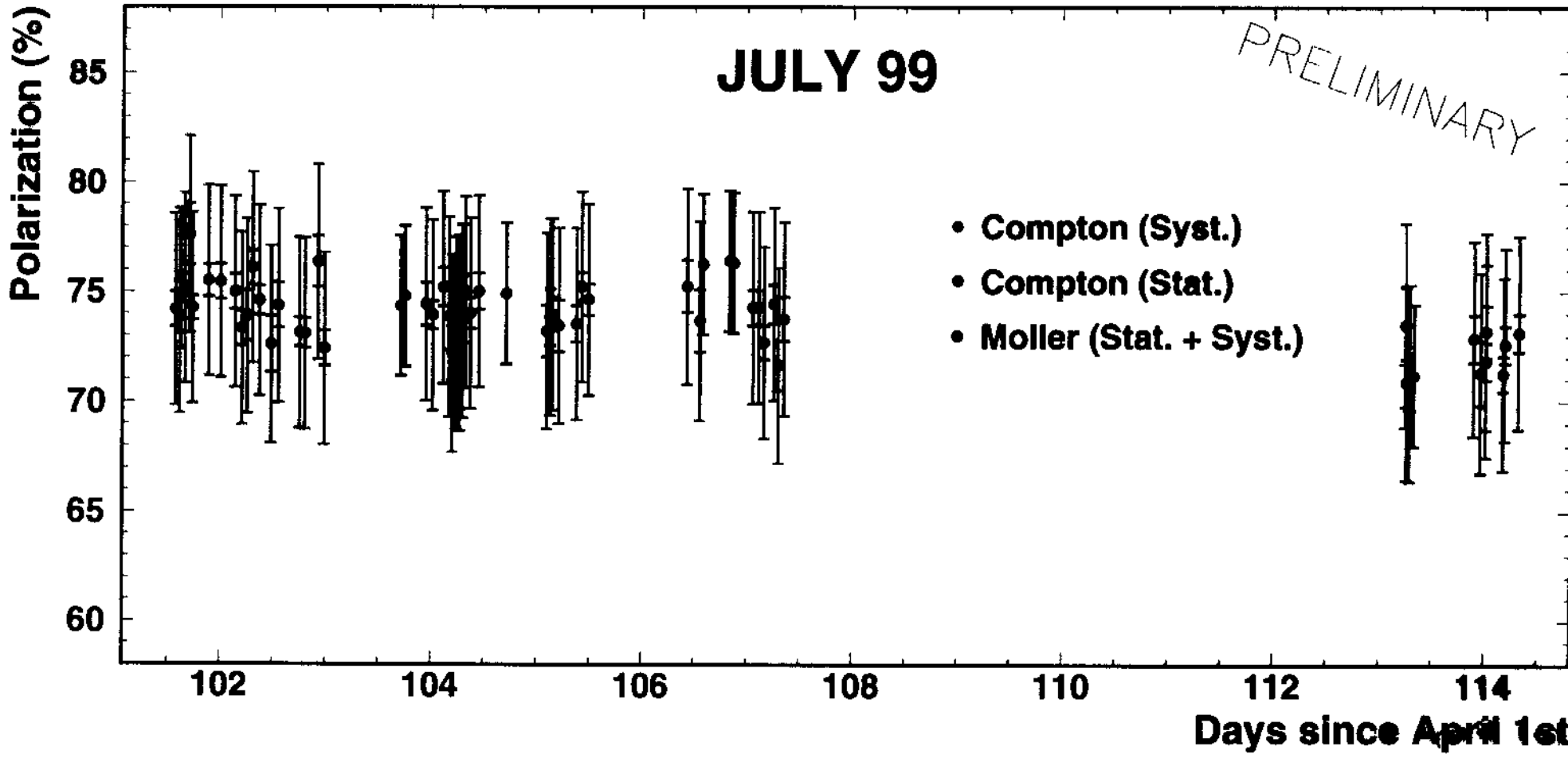
JULY 99
PRELIMINARY
Polarization (%)
85
80
75
70
65
60
• Compton (Syst.)
• Compton (Stat.)
• Moller (Stat. + Syst.)
102
104
106
108
110
112
114
Days since April 1st

Instrumentation

- Helium cryotarget with 10 cm Ø tuna can installed
  - cooling power much less than anticipated
  - connected two heat exchanges in parallel
  - design and construct new heat exchanges
- Consistent spectrometer optics data bases
  - HRSE 0.8 - 3.5 GeV; HRSH 0.8 GeV
  - including spectrometer dipole constants
- Trigger timing improvement study by UNH
  - Bicron can not deliver curved light guides
- Prototype diffuse reflective aerogel successfully commissioned, final version under construction
- RICH detector production on schedule
- Third Arm Detector
  - lead-glass photon calorimeter under assembly
  - ➡ Big Bite detector package being assembled
- ➡ Septum magnets (scattering angle 6°-12.5°)
  - final readiness review in May
  - schedule becoming very tight for installation 2/2001

Big Bite

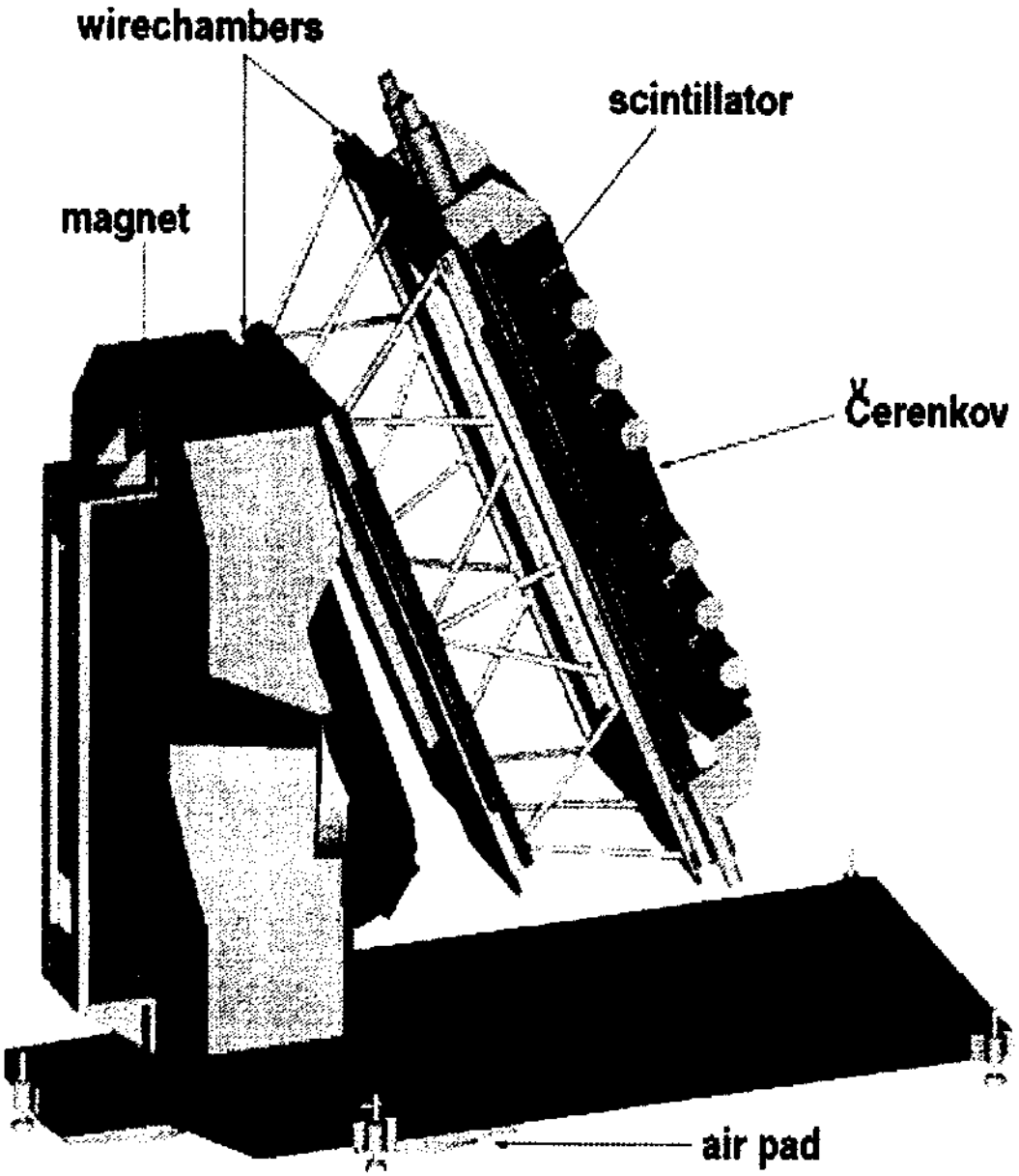

- Existing detector package being assembled

Status of Experiments Run

- E89-003 $^{16}O(e,e'p)$ partially (~50 %) completed

  first publication submitted, second as final draft

- E89-033 $^{16}O(\vec{e},e'\vec{p})$ FPP partially completed

  publication submitted to PRL

- E91-026 $^{2}H(e,e'd)$ completed

  results for $A(Q^2)$: PRL **82**, 1374 (1999);

  → preliminary results for $B(Q^2)$;

- E93-050 VCS completed

  preliminary results next month (Gent)

- E91-010 HAPPEX

  first successful production run

  PRL **82**, 1096 (1999)

- E93-027 $^{1}H(\vec{e},e'\vec{p})$ FPP completed

  preliminary results great impact

  publication accepted for February 7(PRL **84**)

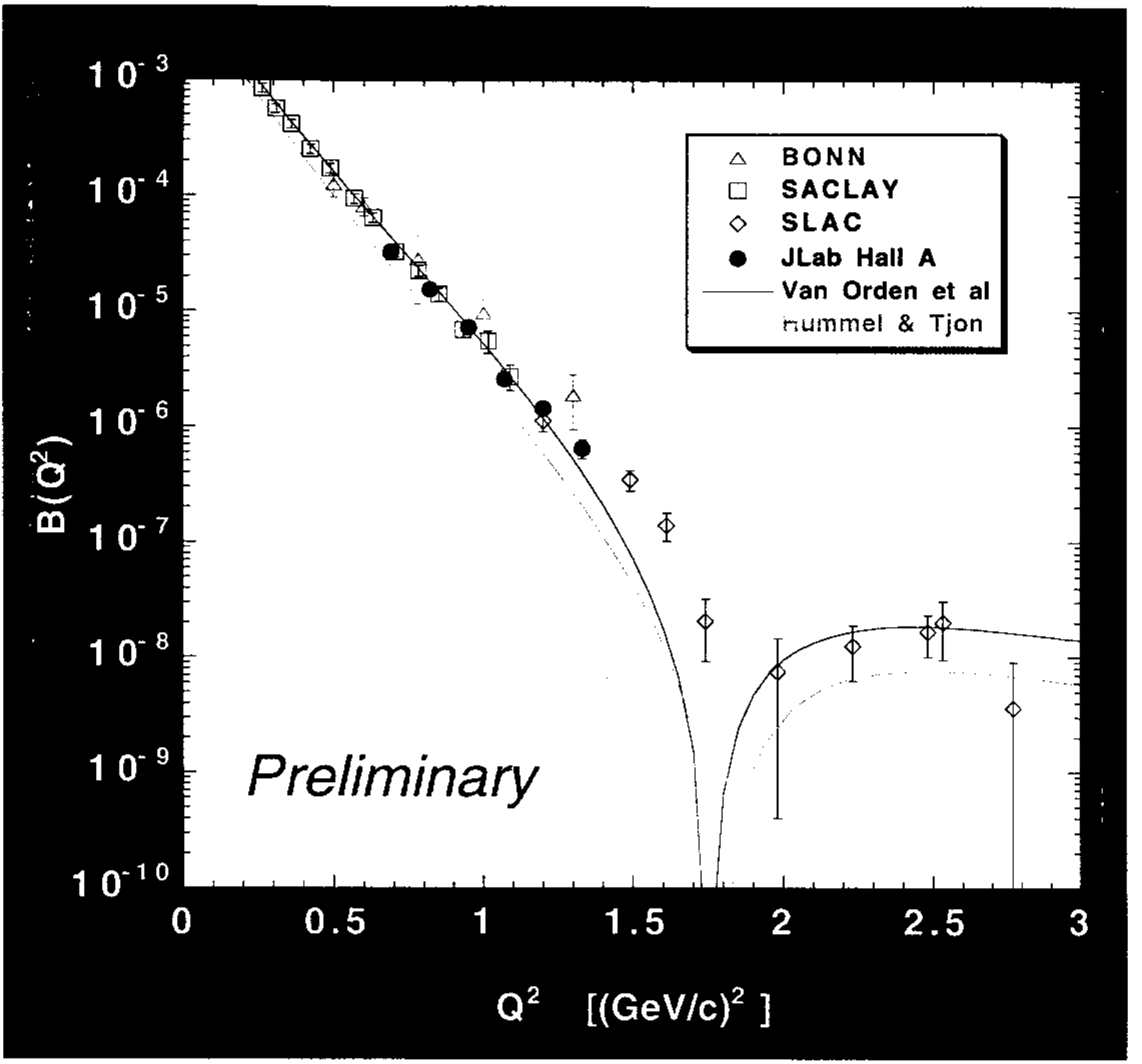
BONN
SACLAY
SLAC
JLab Hall A
Van Orden et al
Hummel & Tjon
Preliminary
B(Q²)
Q² [(GeV/c)²]
10⁻³
10⁻⁴
10⁻⁵
10⁻⁶
10⁻⁷
10⁻⁸
10⁻⁹
10⁻¹⁰
0
0.5
1
1.5
2
2.5
3

Status of Experiments Run (cont.)

- E94-010 GDH on $^3\vec{\mathrm{He}}$ completed

  Analysis in progress, preliminary results this spring

- E95-001 $^3\vec{\mathrm{He}}(\vec{e},e')$completed

  ➡ Analysis in progress, preliminary results

➡ E94-010 HAPPEX second run completed

  Stable running with strained GaAs wafer (75 % at 55 μA)

  Analysis practically finalized

- E89-019 Proton polarization in $\mathbf{d}(\gamma,\vec{\mathbf{p}})\mathbf{n}$ completed

  ➡ Preliminary results

- E99-008 Large-angle deuteron photodesintegration

  Completed

- E94-012 Photoproton polarization in $\mathbf{p}(\gamma,\vec{\mathbf{p}})\pi^{\circ}$

  Completed

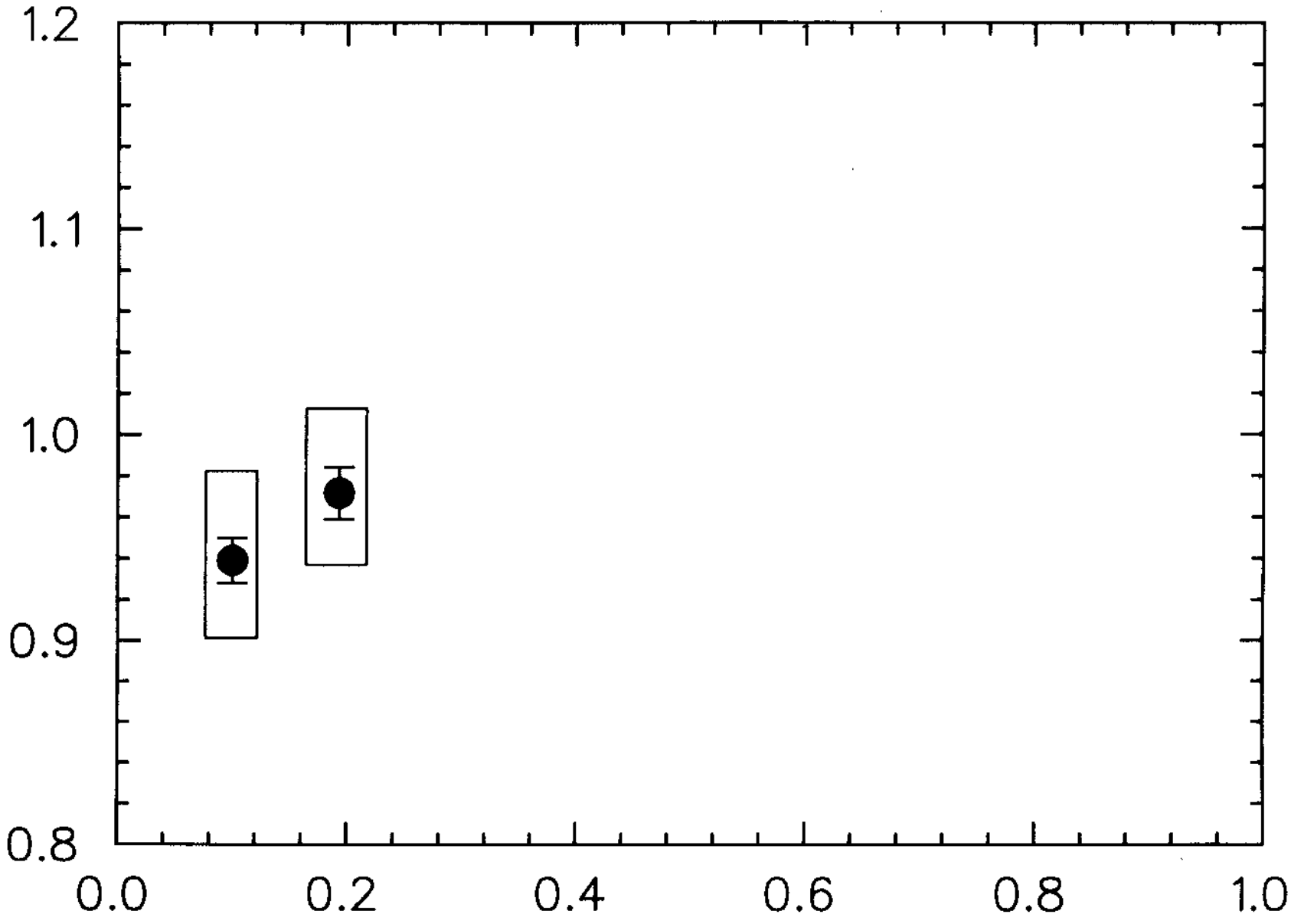
1.2
1.1
1.0
0.9
0.8
0.0
0.2
0.4
0.6
0.8
1.0

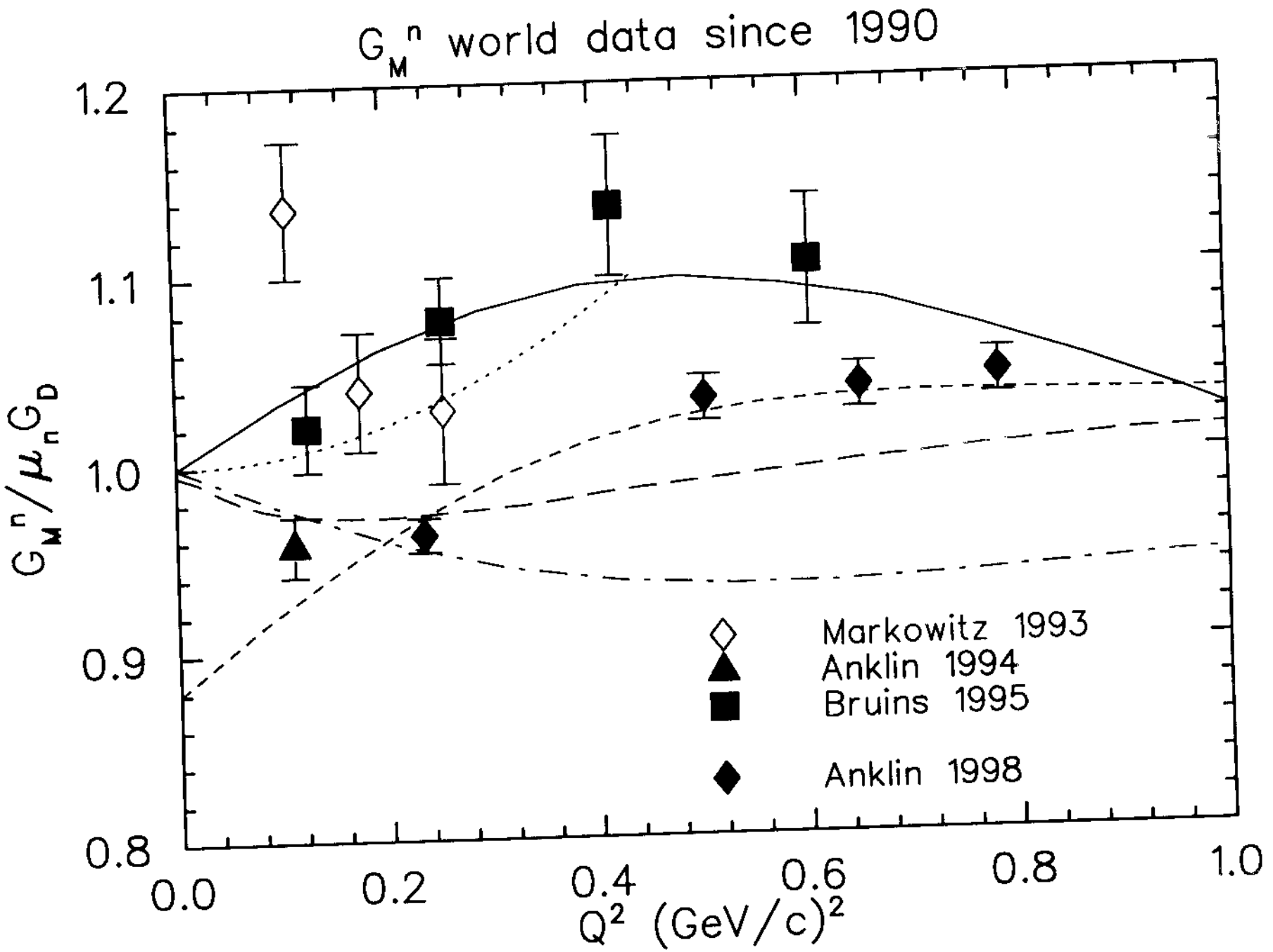
G_M^n world data since 1990
1.2
1.1
1.0
0.9
0.8
$G_M^n/\mu_n G_D$
0.0
0.2
0.4
0.6
0.8
1.0
Q^2 (GeV/c)^2
Markowitz 1993
Anklin 1994
Bruins 1995
Anklin 1998

HAPPEX 1999

Corrections due to Monitor Difference

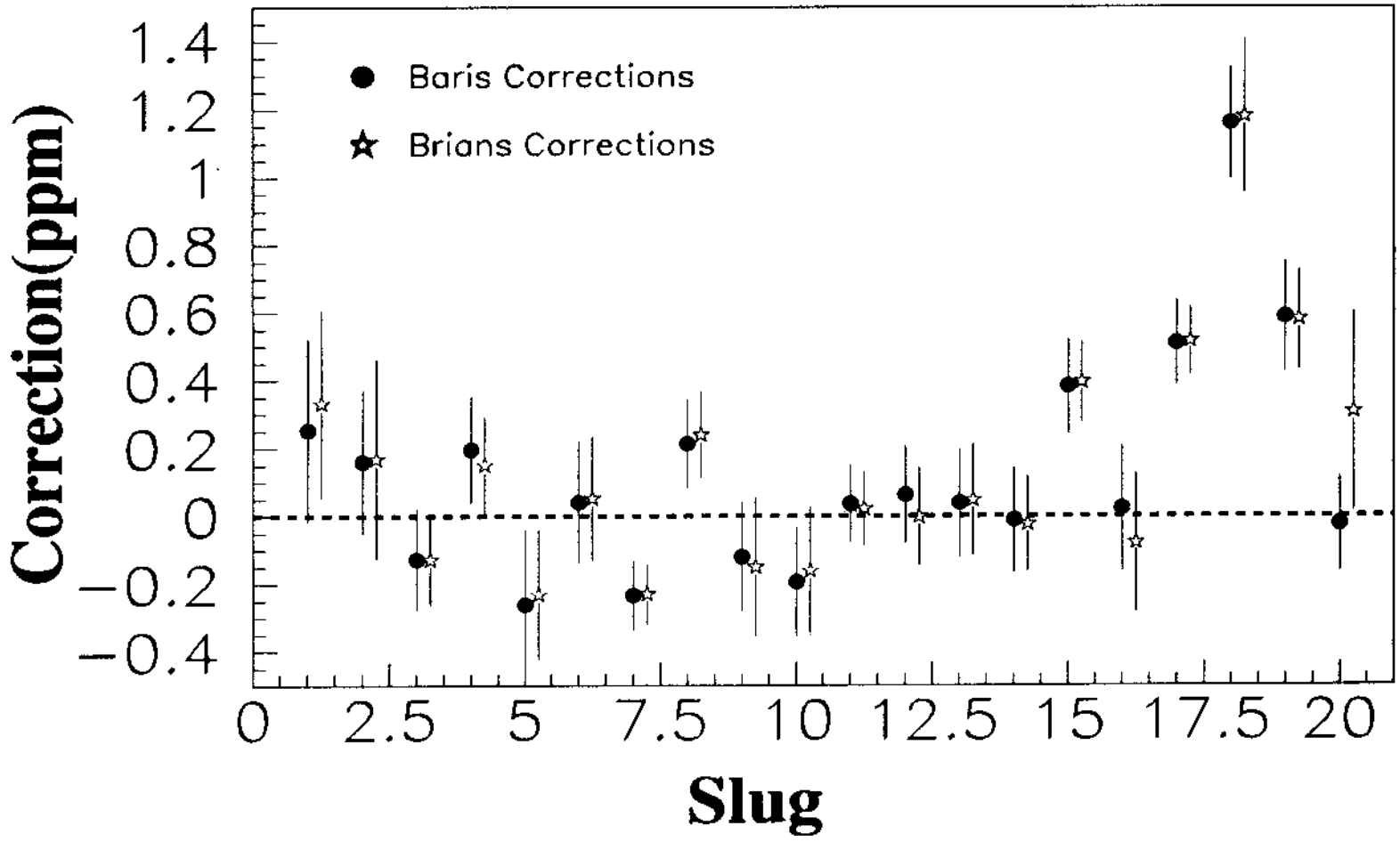

HAPPEX Result -- 1999 Run

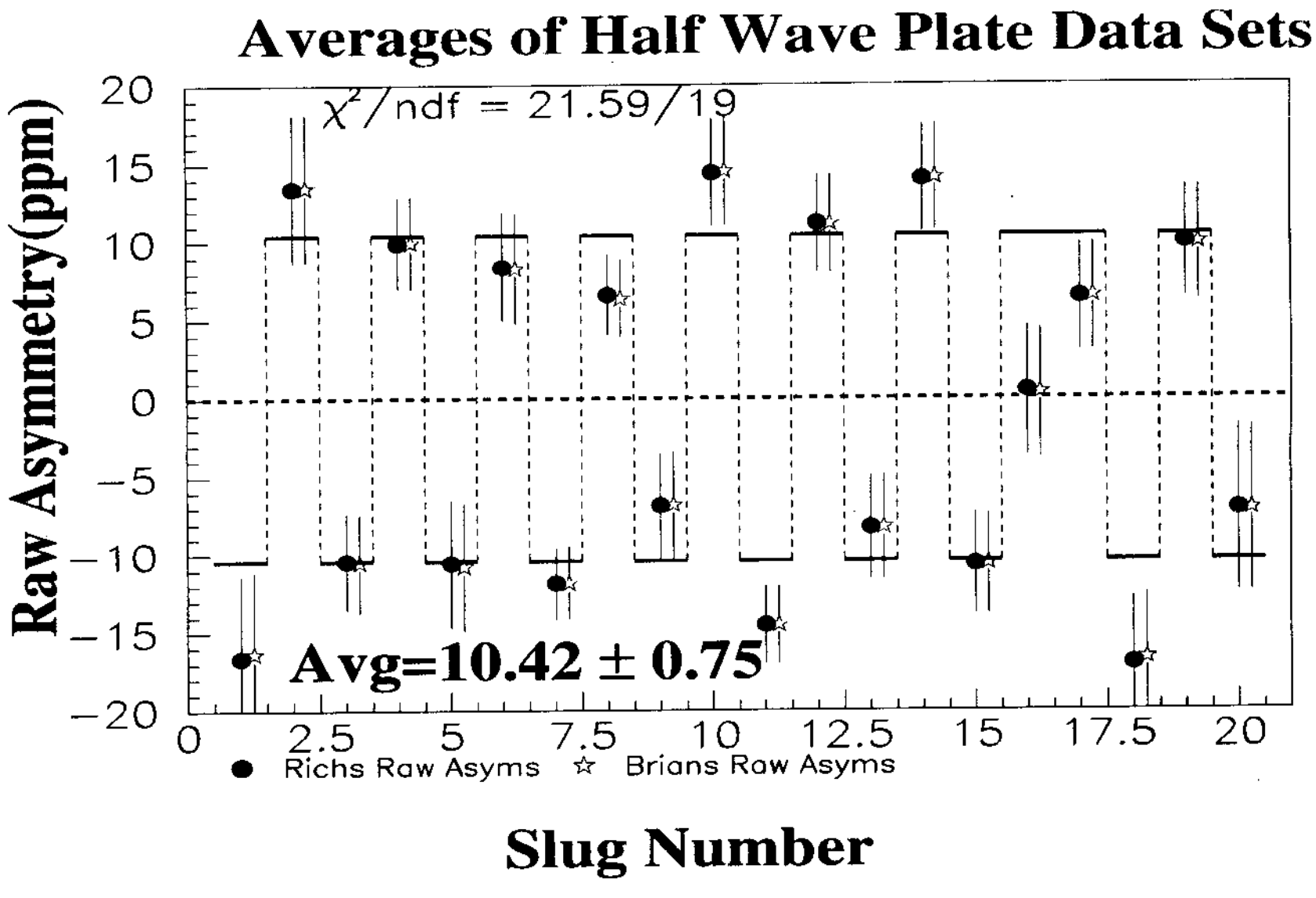

HAPPEX Result -- Comparison to Strangeness Models

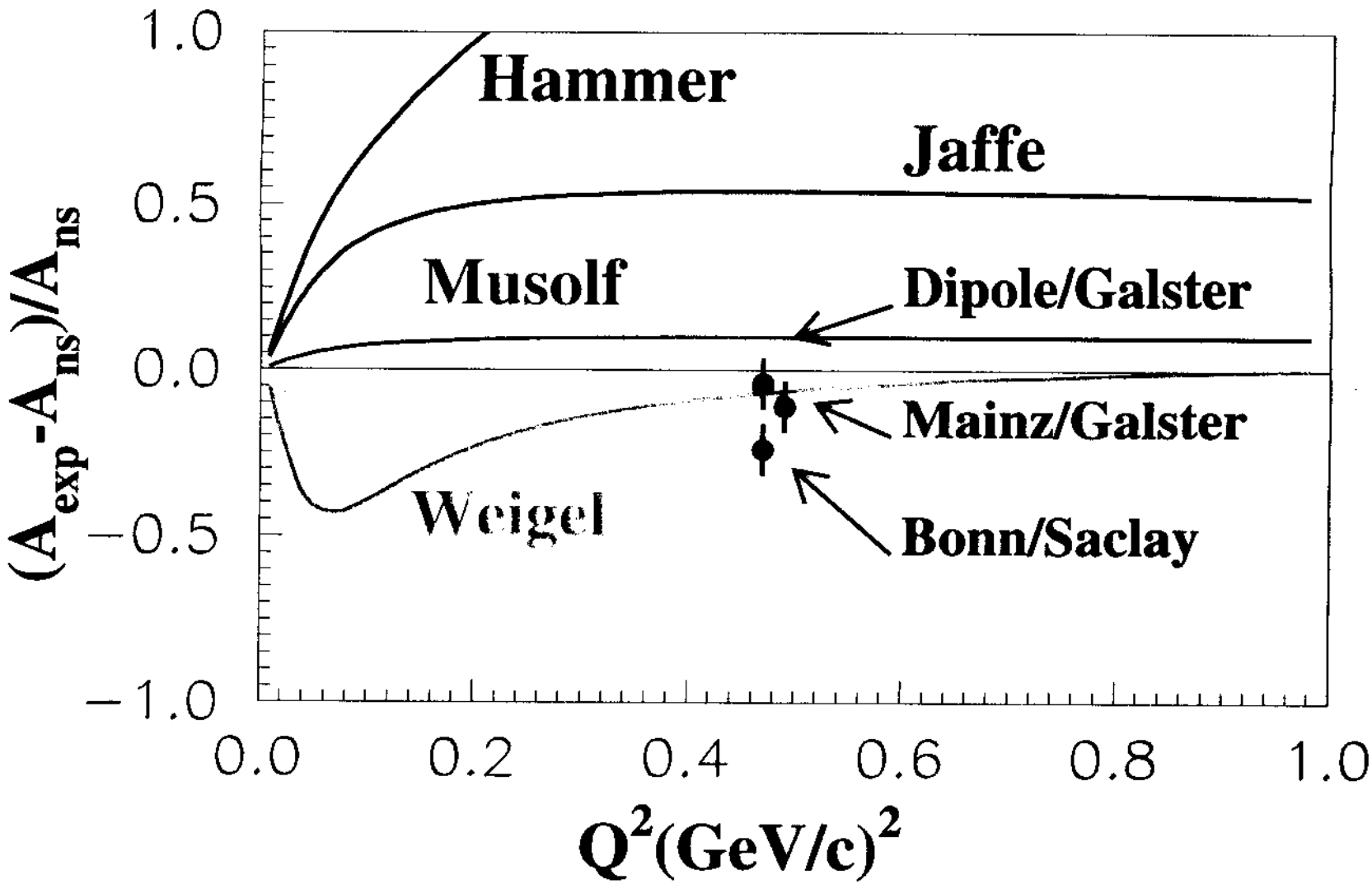

Status of Experiments Run (cont.)

- E89-028 Polarization transfer in $\mathbf{d(\vec{e},e'\vec{p})n}$ completed

  Measure G_E/G_M in deuteron

  ➡ Preliminary results

- E94-004 In-plane separations and High-momentum structure in d(e,e'p)n partial run (10 %)

  Q.E.; $Q^2 = 0.66\ (\mathrm{GeV/c})^2$; $p_r < 0.55$ GeV/c

  ➡ MCEEP Monte Carlo simulation

- E89-044 structure function separations for ^{3}He(e,e'p)

  I in perpendicular kinematics at Q = 1.5 GeV/c

  for $p_m < 550$ MeV/c

  II in parallel kinematics at Q = 1 - 3 GeV/c and

  for $-300 < p_m < 300$ MeV/c

  III in perpendicular kinematics at large E_m

  IV in parallel kinematics at large E_m

➡ data taking started

Experiment E89-028

1) Measured the three polarization component, P_L, P_T and P_N of the outgoing proton in the reaction ^{2}H$(\vec{e}e'\vec{p})$n

2) Measurements at Q^2 = 0.43,1.0 and 1.6 (GeV/c)^2 and quasi-free kinematics (recoil momentum $p_r = 0$) with errors of 0.02, 0.02, 0.05 .

3) Measurements at Q^2 = 1.0 (GeV/c)^2 and $p_r = 160 MeV/c$ with error of 0.05 .

4) Measured P_L, P_T and P_N for ^{1}H$(\vec{e}e'\vec{p})$ so direct comparison to test if proton in deuterium acts like a free proton at quasi-free kinematics.

HRS Standard Setup

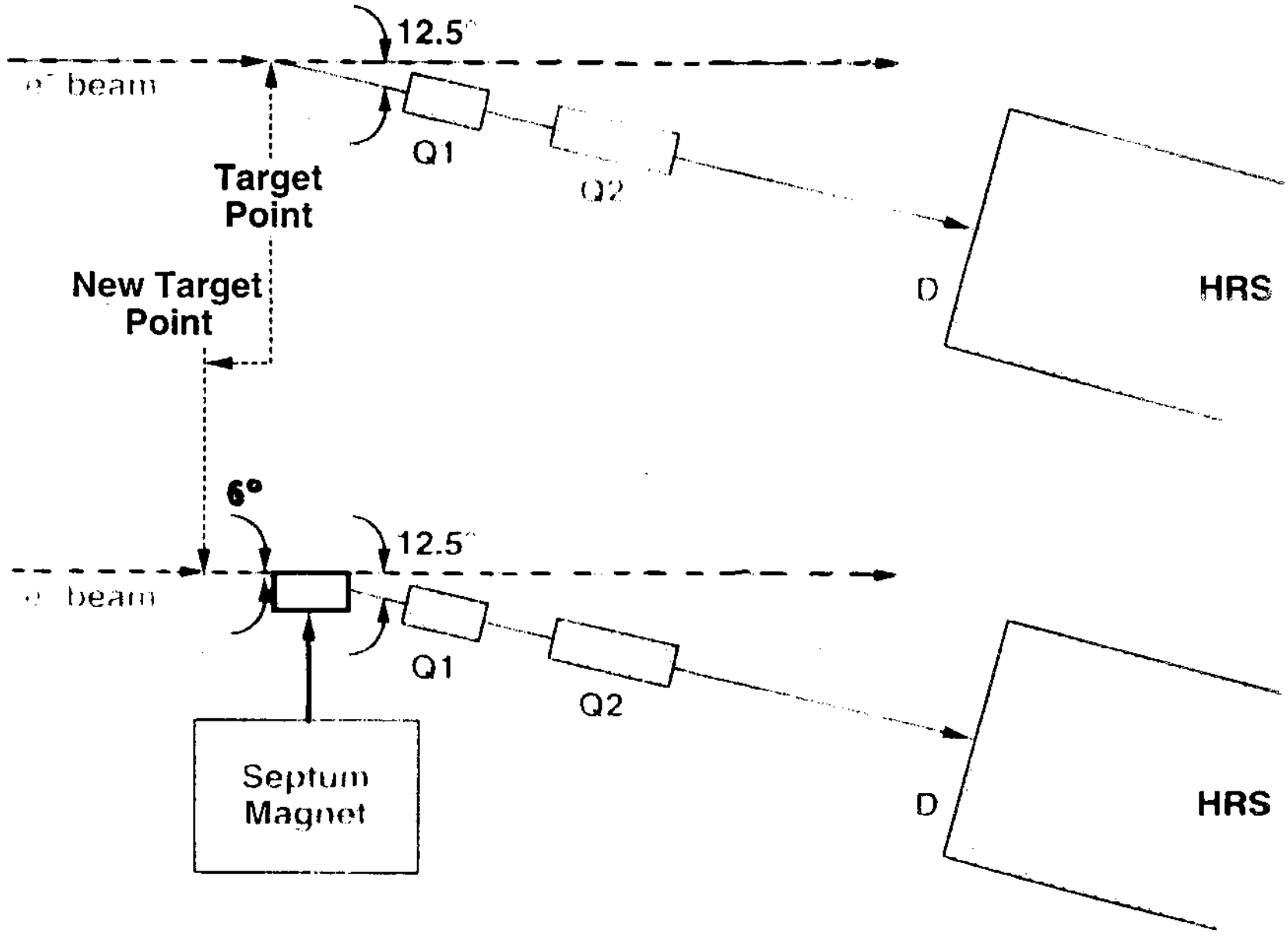

HALL-A SUMMARY

- Research Program active and successfull
- Base Equipment Operational,
  Conforms to design specifications
- Ten Experiments Fully Completed,
  Five Partially
- Three PRL Publications, two submitted
  Over 90 presentations at conferences
  Six Ph.D. theses on experiments
- Important Issue for Long Term Future
  - Research Program at Higher Energies
    white paper by fall of this year

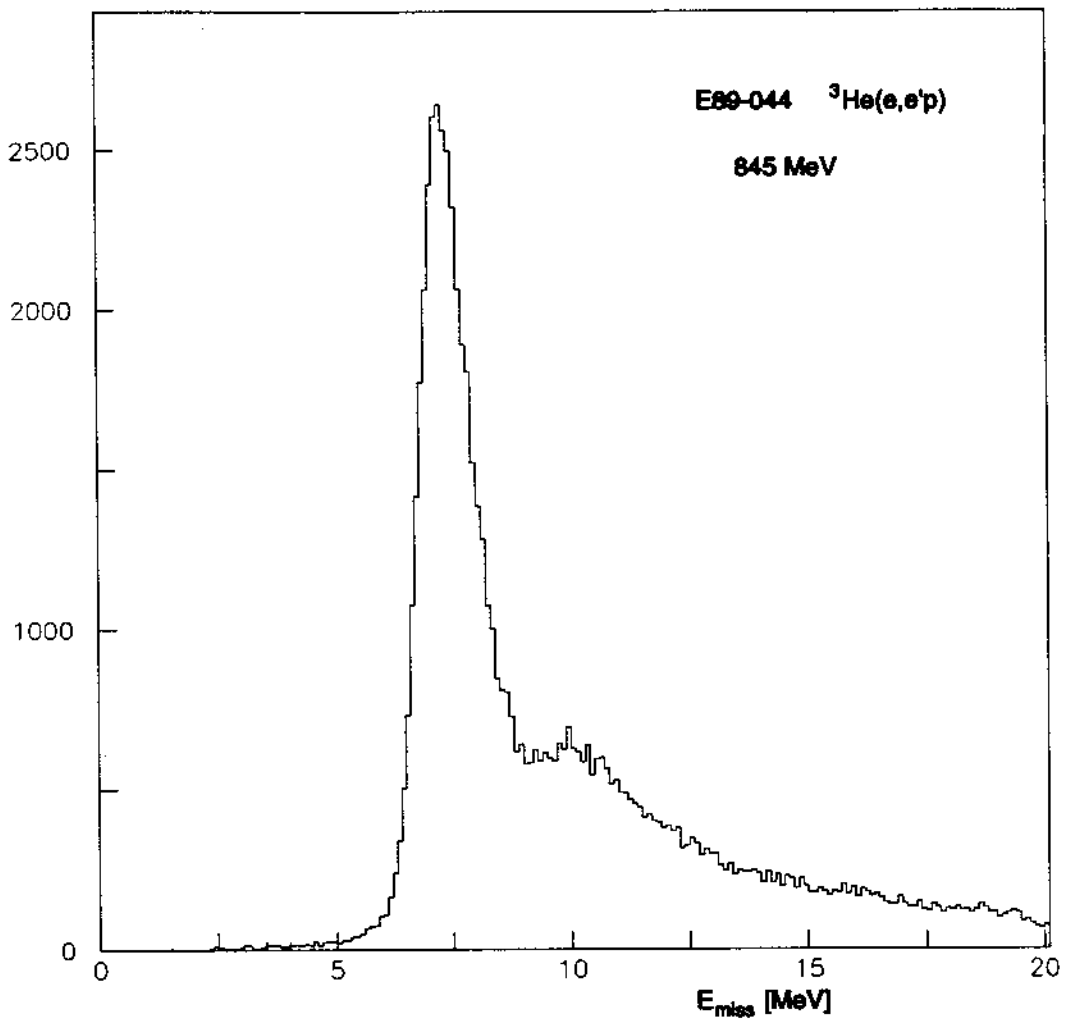
E89-044 ^{3}He(e,e'p)
845 MeV
2500
2000
1000
0
0
5
10
15
20
E_{miss} [MeV]