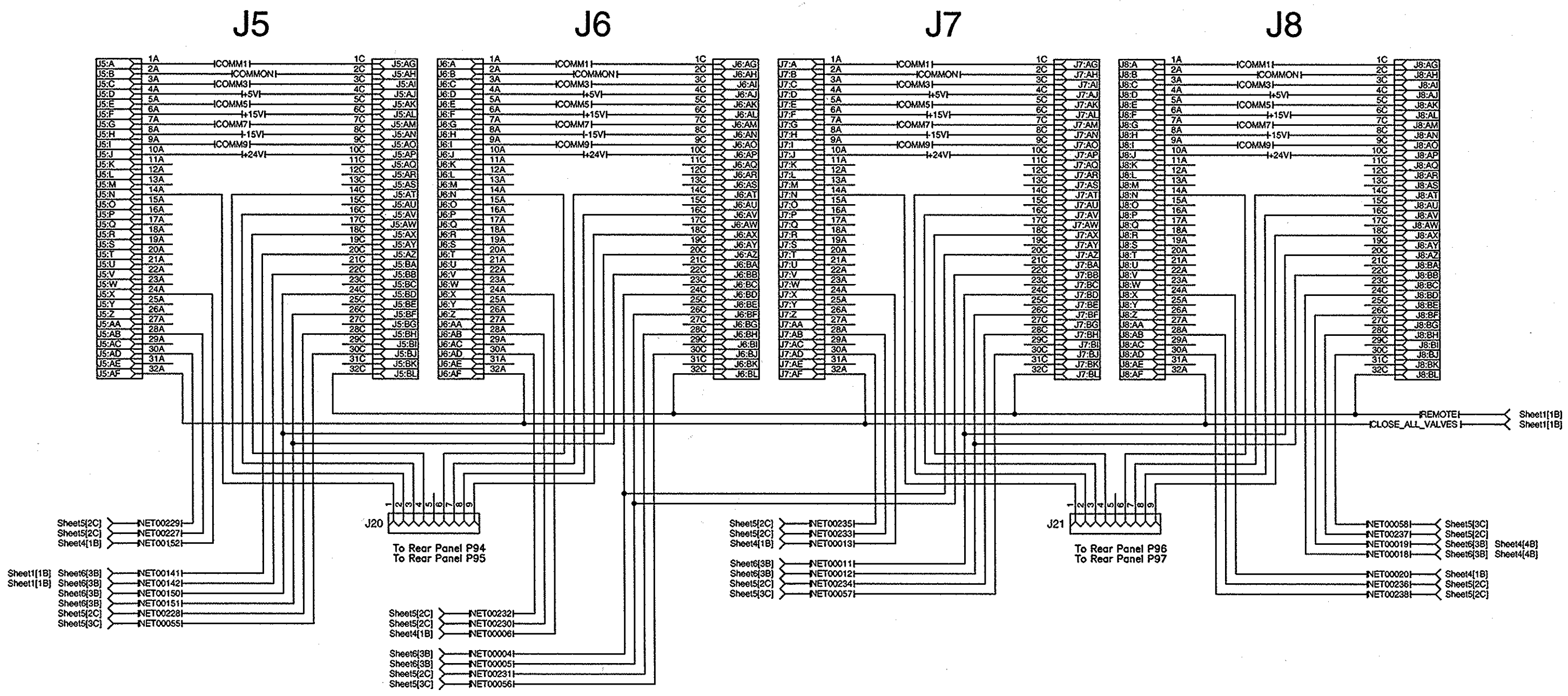

TITLE
SPALLATION NEUTRON SOURCE (SNS)
VACUUM SYSTEM
MEDIUM BETA 1 UPPER BACKPLANE
SCHEMATIC

SIZE	CAD I.D. NO.	DRAWING NO.	REV.
B	\\LABGRP\EECAD\USERS\KEVIN\SNS\1030-UBP\1030.sch	EEC9001234-1030	-
SCALE NONE	SHOWN ON –	SHEET 2 OF 7	