REVISION HISTORY				
ZONE	REV	DESCRIPTION	DATE	APPROVED

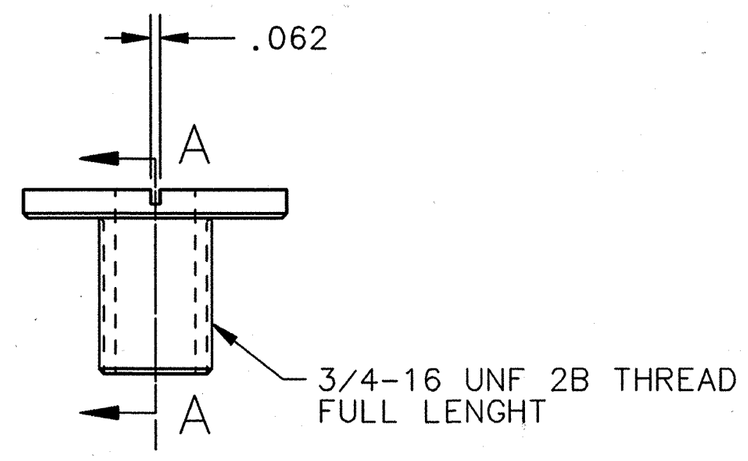

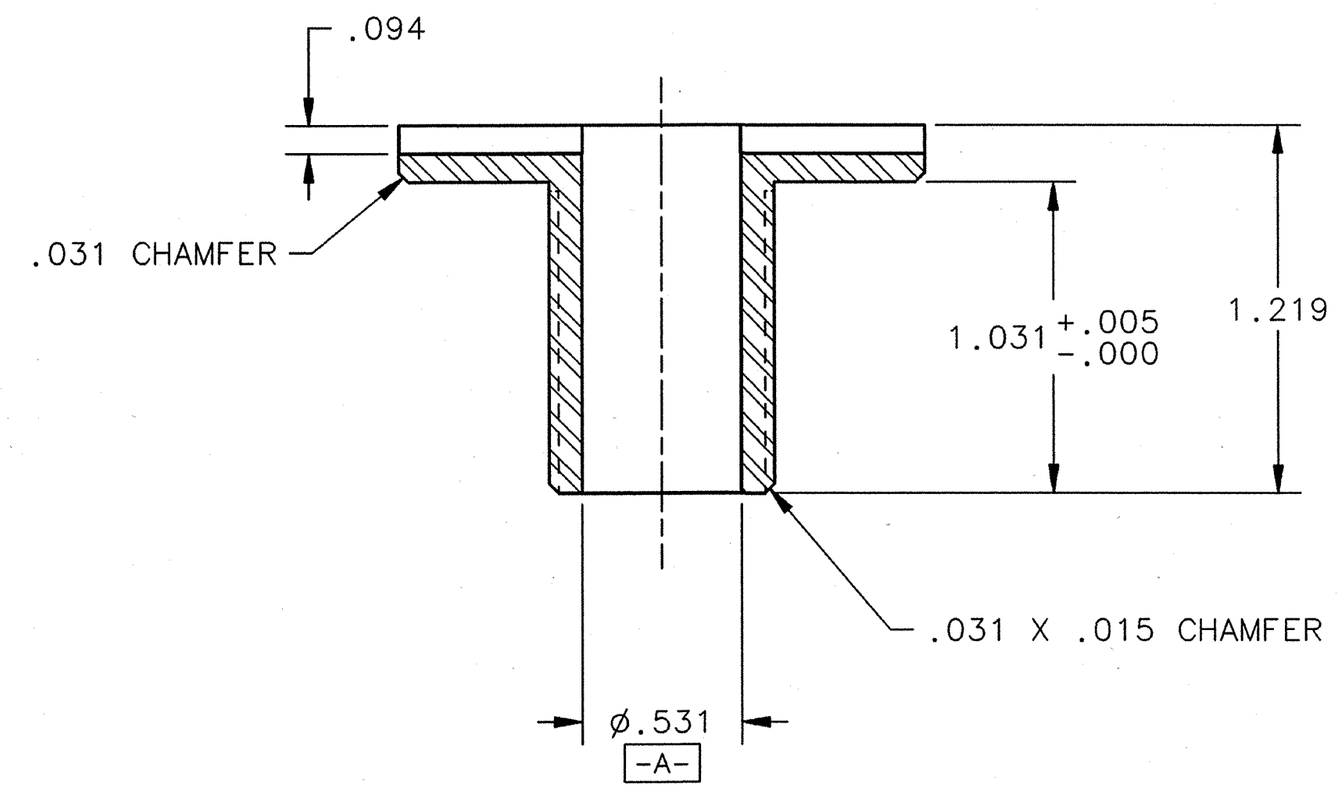

SECTION A - A

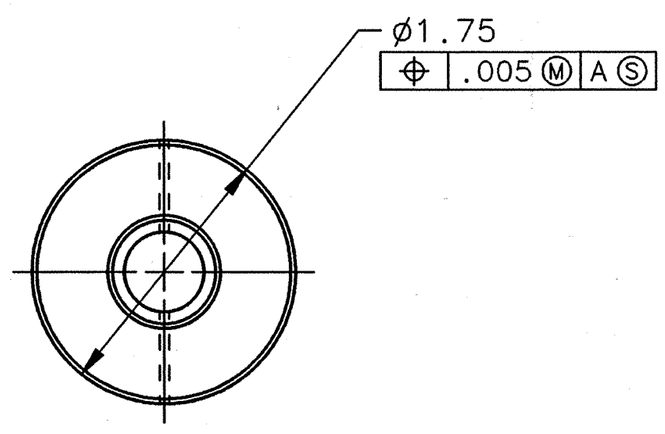

DIM & TOL PER ANSI Y14.5 .
UNLESS OTHERWISE SPECIFIED
DIMENSIONS ARE IN INCHES
TOLERANCES ARE:

FRACTIONS	DECIMAL	ANGLES
±	.XX ±.01	±.50°
	.XXX ±.005	

MATERIAL
STAINLESS STEEL 304

FINISH 125 UNLESS OTHERWISE NOTED
DEBURR & BREAK ALL SHARP EDGES

DO NOT SCALE DRAWING

CADD I.D. NO.: I-DEAS
SNS DRAWING NUMBER:
104130801-T8C-8320-A120-R00

APPROVALS	DATE
DRAWN R.BISHOP	09FEB01
CHECKED Ed Sacco	3.22.01
APPROVED T. Whitten	26 MAR 01
APPROVED J. Hamida	26 Mar 01

Jefferson Lab
Thomas Jefferson National Accelerator Facility
NEWPORT NEWS, VIRGINIA
UNITED STATES DEPARTMENT OF ENERGY

SPALLATION NEUTRON SOURCE
CAVITY TOOLING
TACK WELD STAND
LOCK SCREW - ROD LOCATOR DETAIL

SIZE C | DWG. NO. CRM9000010-0120 | REV. -
SCALE 1:1 | USED ON ASSY NO. CRM9000010-0103 | SHEET 1 OF 1

DWG. NO. CRM9000010-0120 SHT. 1 REV. -