REVISION HISTORY				
ZONE	REV	DESCRIPTION	DATE	APPROVED

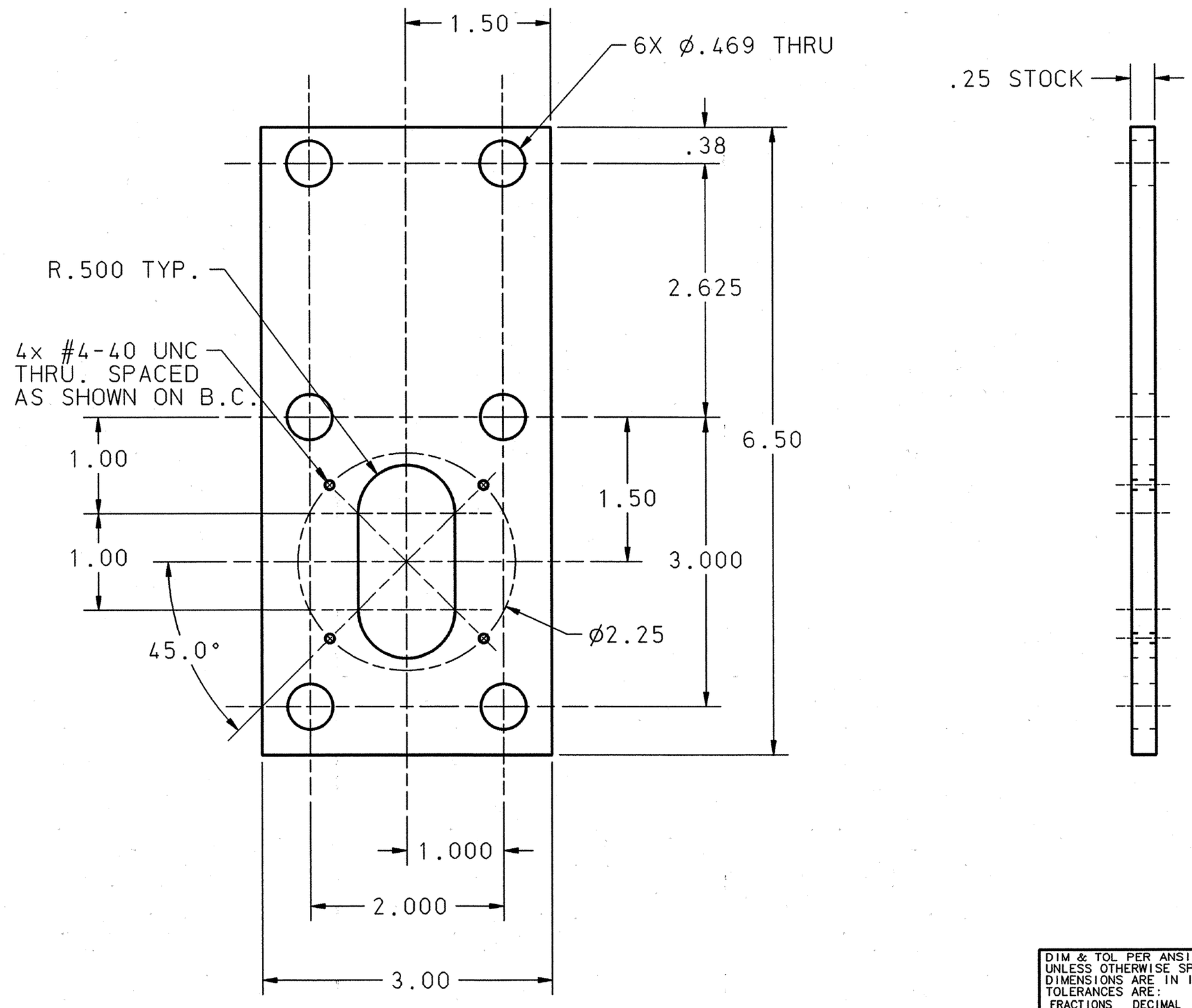

DIM & TOL PER ANSI Y14.5. UNLESS OTHERWISE SPECIFIED DIMENSIONS ARE IN INCHES TOLERANCES ARE:
FRACTIONS ±N/A DECIMAL .XX ±.02 .XXX ±.005 ANGLES ±.50°

MATERIAL: 304 STAINLESS STEEL

FINISH 125 UNLESS OTHERWISE NOTED

DEBURR & BREAK ALL SHARP EDGES

DO NOT SCALE DRAWING

CADD I.D. NO.: I-DEAS 104130801-T8C-8320-A136-R00

APPROVALS	DATE
DRAWN CHRIS GRAVES	03 Apr01
CHECKED	09 May 01
APPROVED	09MAY01
APPROVED	9/5/01

Jefferson Lab
Thomas Jefferson National Accelerator Facility
NEWPORT NEWS, VIRGINIA
UNITED STATES DEPARTMENT OF ENERGY

SPALLATION NEUTRON SOURCE
CRYOMODULE - CAVITY TOOLING
CAVITY HANDLING CART PIVOT
SPRING COVER PLATE DETAIL

SIZE	DWG. NO.	REV.
C	CRM9000010-0317	–

SCALE 1:1 USED ON ASSY NO. CRM9000010-0301 SHEET 1 OF 1

DWG. NO. CRM9000010-0317 SHT. 1 REV. –