REVISION HISTORY				
ZONE	REV	DESCRIPTION	DATE	APPROVED

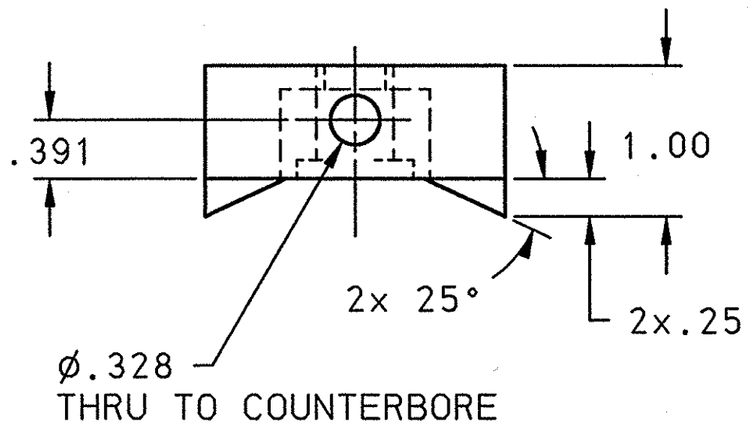

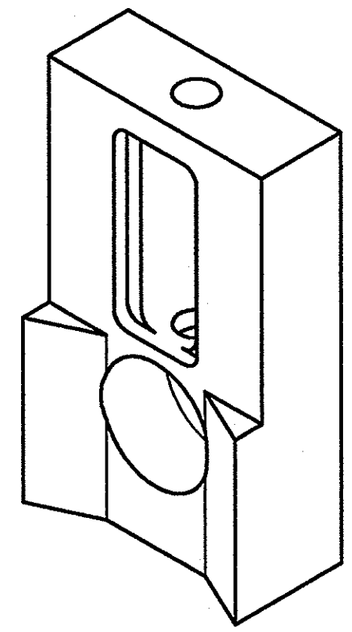

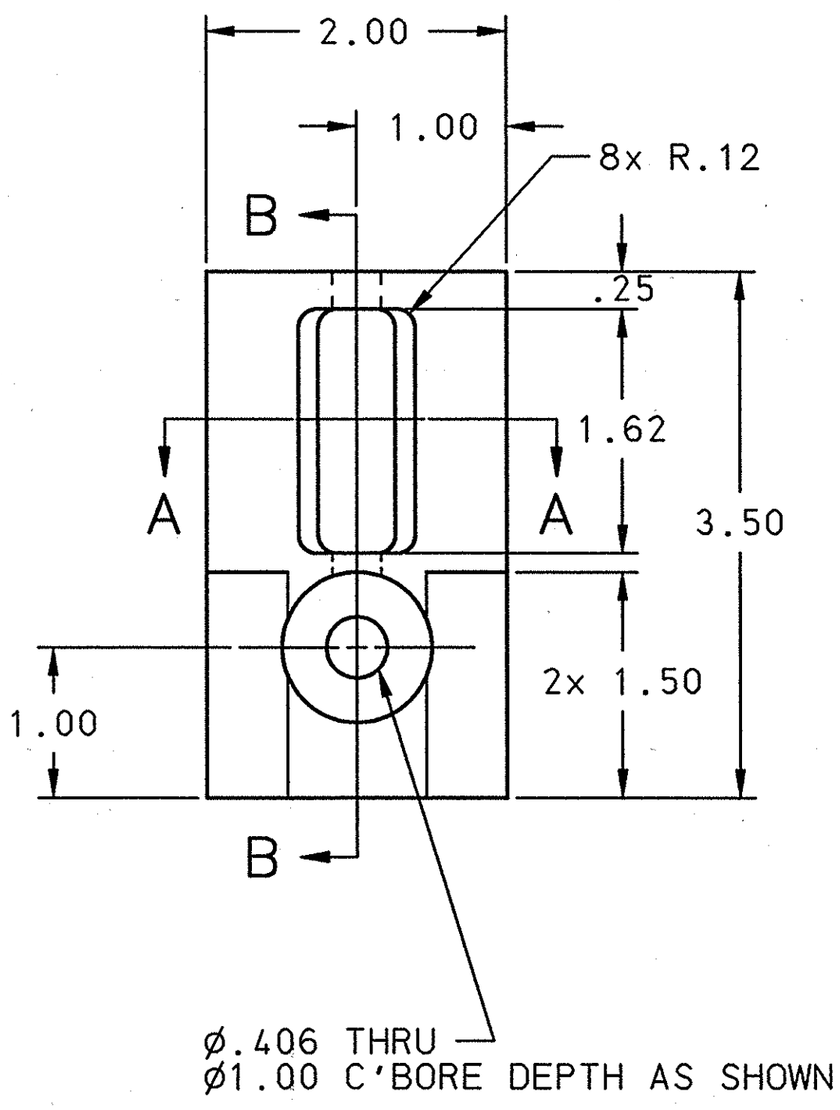

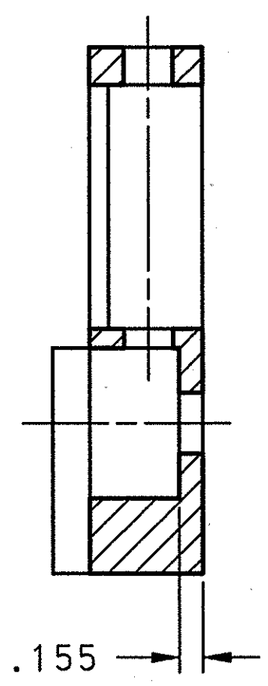

SECTION B-B

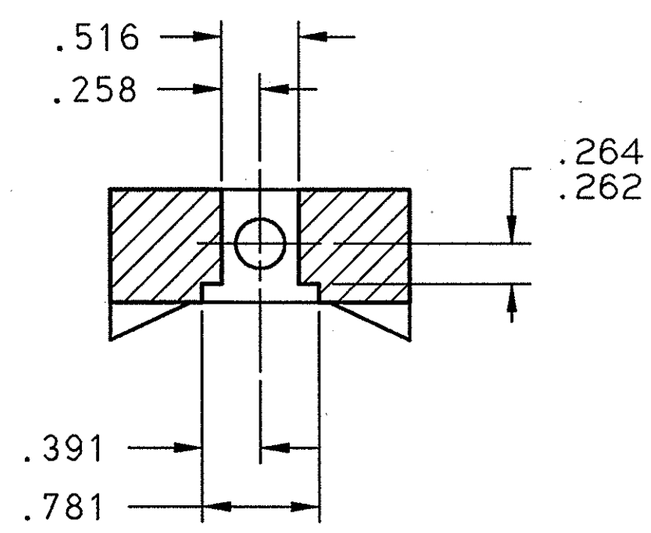

SECTION A-A

DIM & TOL PER ANSI Y14.5. UNLESS OTHERWISE SPECIFIED DIMENSIONS ARE IN INCHES TOLERANCES ARE:
FRACTIONS ±N/A DECIMAL .XX ±.02 .XXX ±.005 ANGLES ±.50°

MATERIAL: 6061-T6 ALUMINUM

FINISH 125 UNLESS OTHERWISE NOTED

DEBURR & BREAK ALL SHARP EDGES

DO NOT SCALE DRAWING

CADD I.D. NO.: I-DEAS 104130801-T8C-8320-A232-R00

APPROVALS	DATE
DRAWN CHRIS GRAVES	13 Dec01
CHECKED	31MAY02
APPROVED	31 MAY 02
APPROVED	12JUN02

Jefferson Lab
Thomas Jefferson National Accelerator Facility
NEWPORT NEWS, VIRGINIA
UNITED STATES DEPARTMENT OF ENERGY

SPALLATION NEUTRON SOURCE
CRYOMODULE - CAVITY TOOLING
TACK WELD STAND
BODY - DETAIL

SIZE	DWG. NO.	REV.
C	CRM-900-0010-0552	–

SCALE 1:1 USED ON ASSY NO. CRM-900-0010-0550 SHEET 1 OF 1

DWG. NO. CRM-900-0010-0552 SHT. 1 REV. –