DWG. NO.	SHT.	REV.
58432-D-0652	1	-

REVISIONS

ZONE	REV.	DESCRIPTION	DATE	APPROVED

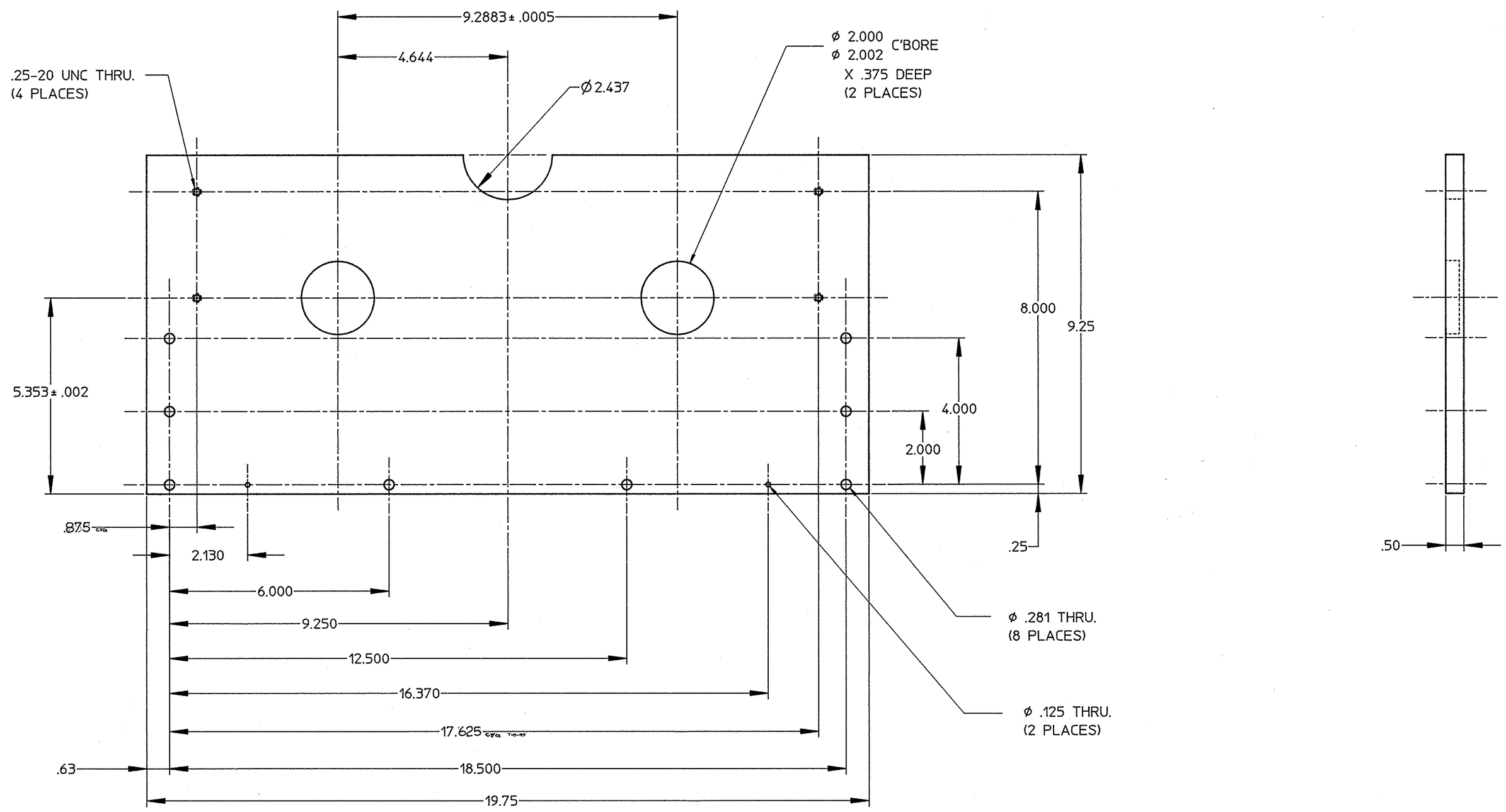

QTY REQD	ITEM NO.	PART OR IDENTIFYING NO.	NOMENCLATURE OR DESCRIPTION	MATERIAL SPECIFICATION	NOTES

PARTS LIST

DIM & TOL PER ANSI Y14.5
UNLESS OTHERWISE SPECIFIED
DIMENSIONS ARE IN INCHES
TOLERANCES ARE:
FRACTIONS ±NA DECIMAL .XX ± .02 .XXX ± .005 ANGLES ± NA

MATERIAL: 6061-T6 ALUMINUM

FINISH: 125 UNLESS OTHERWISE NOTED

DEBURR & BREAK ALL SHARP EDGES

DO NOT SCALE DRAWING

CADD I.D. NO. 584320652

APPROVALS	DATE
DRAWN CHRIS GRAVES	7-1-97
CHECKED	7/17/97
APPROVED	7.17.97
APPROVED —	—

Jefferson Lab
Thomas Jefferson National Accelerator Facility
NEWPORT NEWS, VIRGINIA
UNITED STATES DEPARTMENT OF ENERGY

HALL B
1nA BPM AND CURRENT MOITOR
THERMAL SHIELDING BOX LOWER END
DETAIL

SIZE D | DWG. NO. 58432-D-0652 | REV. -

SCALE 1 = 2 | USED ON ASSY NO. 58432-E-0650 | SHEET 1 OF 1