REVISION HISTORY				
ZONE	REV	DESCRIPTION	DATE	APPROVED

NOTES: UNLESS OTHERWISE NOTED

1. BUILD PER SOW #115070-1007S.
2. SUGGESTED SOURCES(OR EQUIVALENT):
   A. PEM CORP. : (800-237-4736) : CAGE - 46384

[3] DO NOT DE-BURR PRIOR TO INSTALLATION OF ITEM 1.

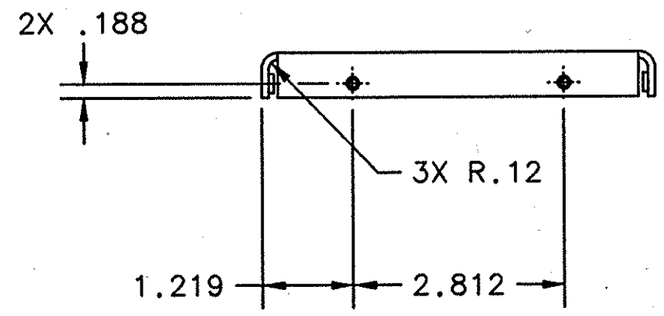

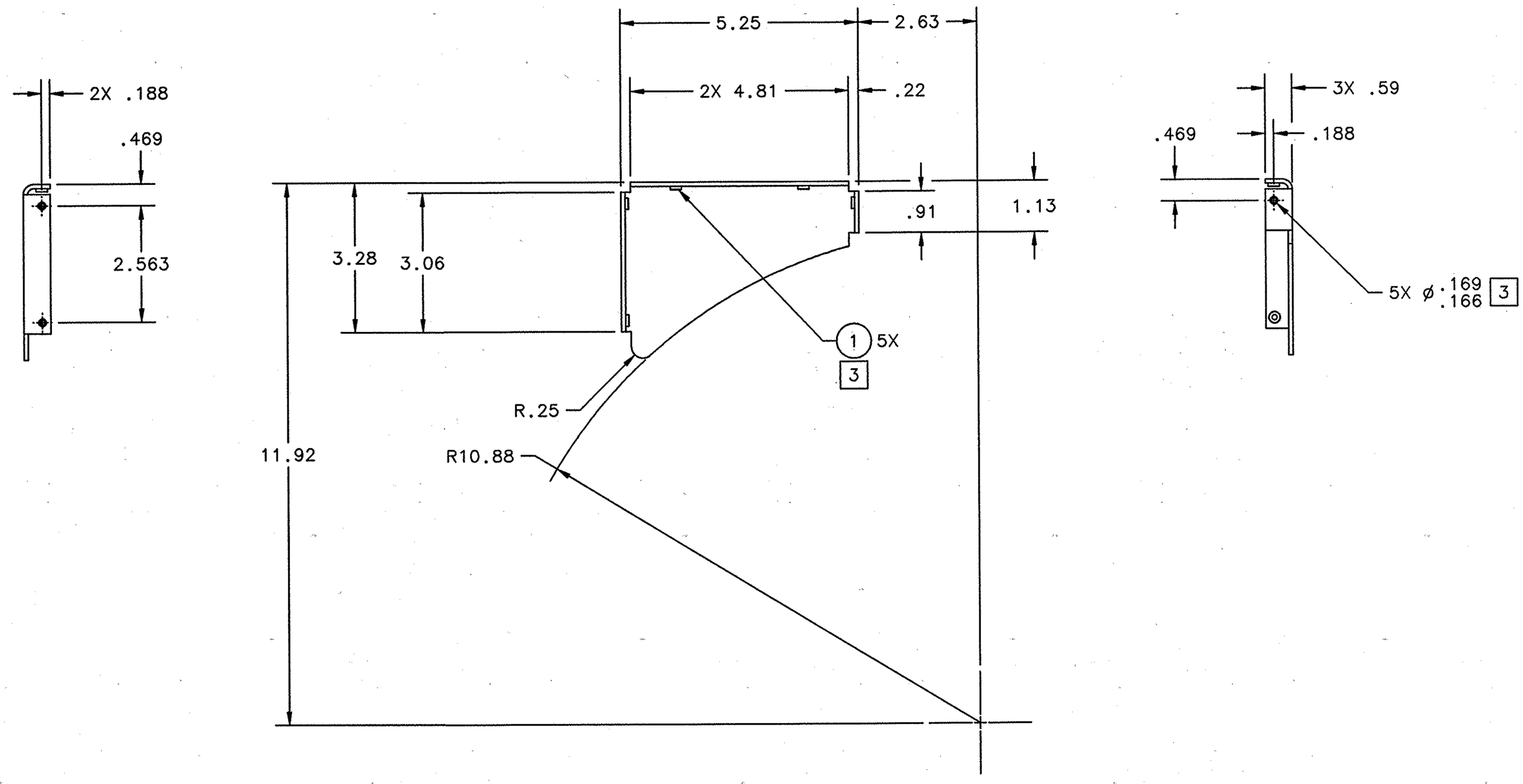

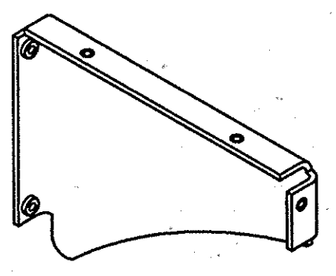

ISOMETRIC VIEW
(FOR PICTORIAL REFERENCE ONLY)

QTY REQD	ITEM NO.	PART OR IDENTIFYING NO.	NOMENCLATURE OR DESCRIPTION	MATERIAL SPECIFICATION	NOTES
5	1	CLS-440-3	SELF-CLINCHING NUT NO. 4(.112)-40UNC	-	2A,3

DIM & TOL PER ANSI Y14.5. UNLESS OTHERWISE SPECIFIED DIMENSIONS ARE IN INCHES TOLERANCES ARE:
FRACTIONS ±1/64 DECIMAL .XX ±.015 .XXX ±.005 ANGLES ±.50°

MATERIAL: COPPER OFHC-C102, .094THK

FINISH 125 UNLESS OTHERWISE NOTED
DEBURR & BREAK ALL SHARP EDGES

DO NOT SCALE DRAWING

CADD I.D. NO.: I-DEAS
PROJ: 115000
LBRY: 115310

APPROVALS	DATE
DRAWN M. SNYDER	19/04/01
CHECKED	20SEP01
APPROVED	20SEP
APPROVED	20/9/01

Jefferson Lab
Thomas Jefferson National Accelerator Facility
NEWPORT NEWS, VIRGINIA
UNITED STATES DEPARTMENT OF ENERGY

SRF
LINAC/CRYOMODULE 1998
SUPPLY END CAN
THERMAL SHIELD INNER PLATE DETAIL

SIZE C | DWG. NO. 115310-1078C | REV. -
SCALE 1/2 | USED ON ASSY NO. 115310-1055E | SHEET 1 OF 1

DWG. NO. 115310-1078C | SHT. 1 | REV. -