REVISION HISTORY				
ZONE	REV	DESCRIPTION	DATE	APPROVED

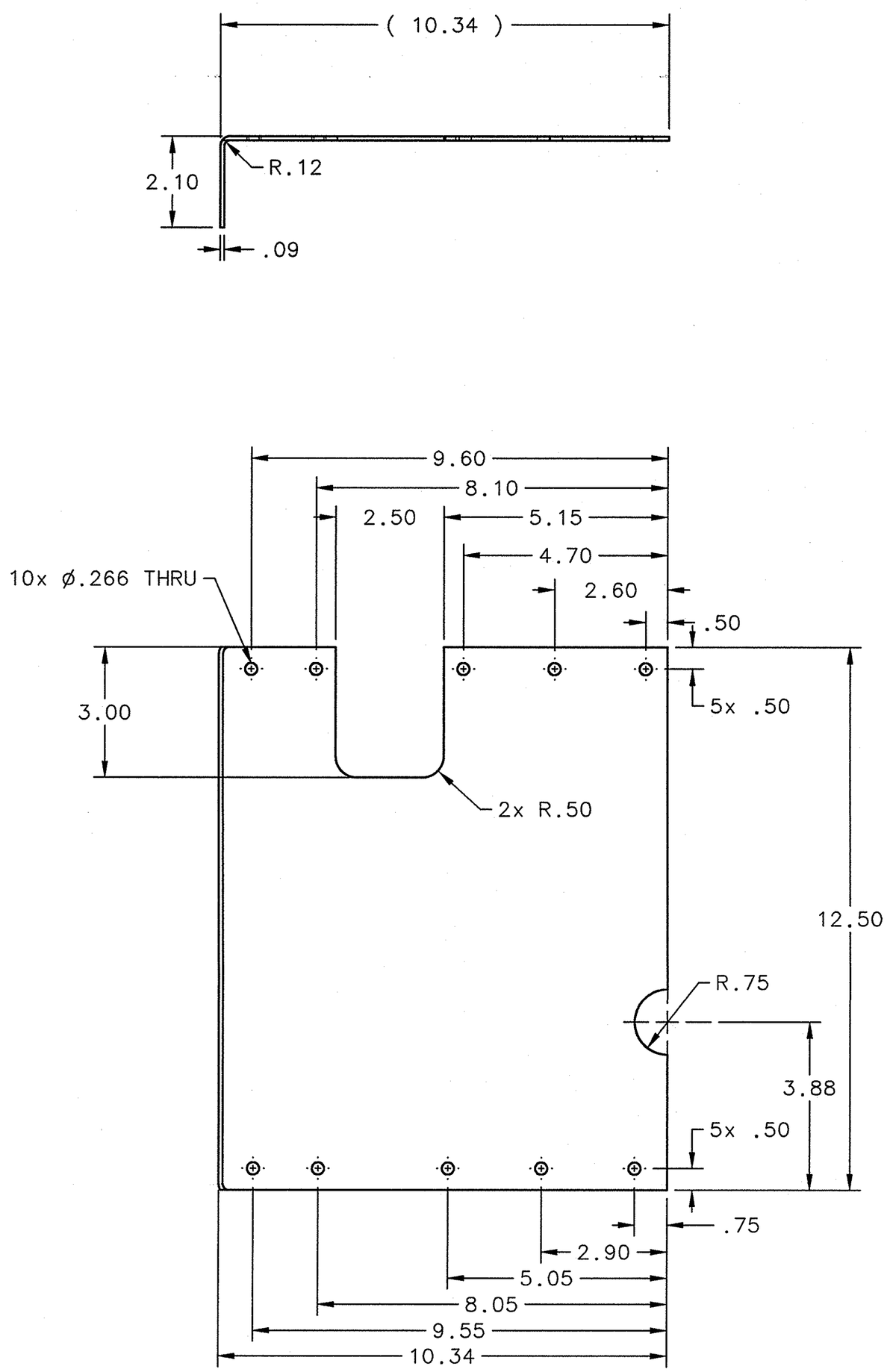

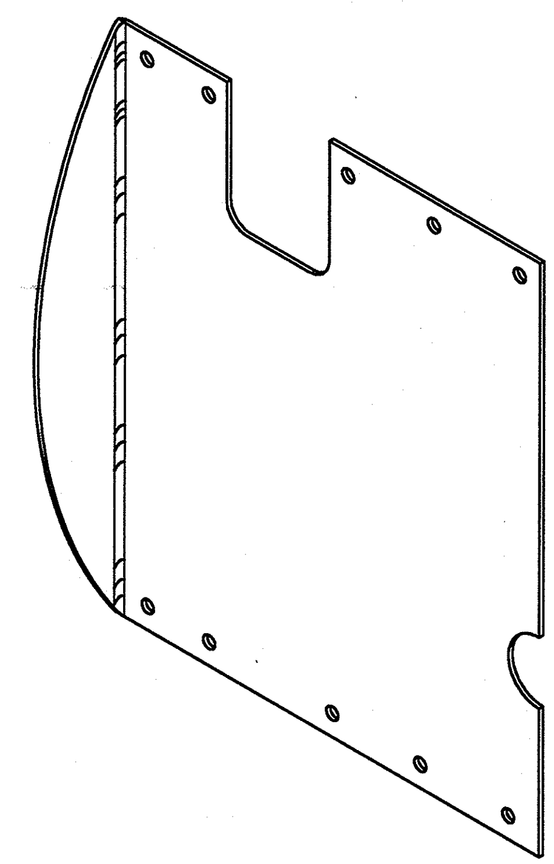

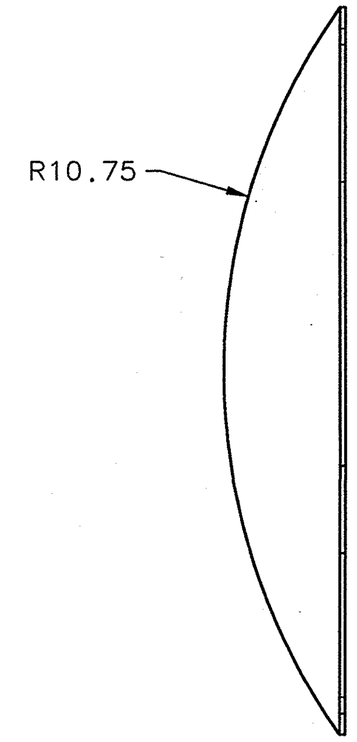

NOTES:

1. FABRICATE SHIELD AND INSULATION PER SOW #CRM-100-7000-1002.

DOCUMENT CONTROL STAMP DCG	DIM & TOL PER ASME Y14.5 UNLESS OTHERWISE SPECIFIED DIMENSIONS ARE IN INCHES TOLERANCES ARE: FRACTIONS ± N/A DECIMAL .X ±.1 .XX ±.02 .XXX ±.005 ANGLES ±.50°	TRACKING NO. N/A	Jefferson Lab Thomas Jefferson National Accelerator Facility NEWPORT NEWS, VIRGINIA UNITED STATES DEPARTMENT OF ENERGY
MATERIAL COPPER, UNS C11000, ETP	THIRD ANGLE PROJECTION	APPROVALS / DATE DRAWN S.SLACHTOUSKI 21APR03 CHECKED D.MACRAE 8/6/03 APPROVED Edward Daly 8/6/03 APPROVED 8/7/03	CRM 100MV CRYOMODULE SHIELDING THERMAL LFT PANEL FPC 7-8 - DETAIL
FINISH MACHINED SURFACES 125 UNLESS OTHERWISE NOTED DEBURR & BREAK ALL SHARP EDGES			SIZE D DWG. NO. CRM-100-7044-1020 REV. –
DO NOT SCALE DRAWING			SCALE 1:2 USED ON ASSY NO. CRM-100-7044-1004/1005 SHEET 1 OF 1