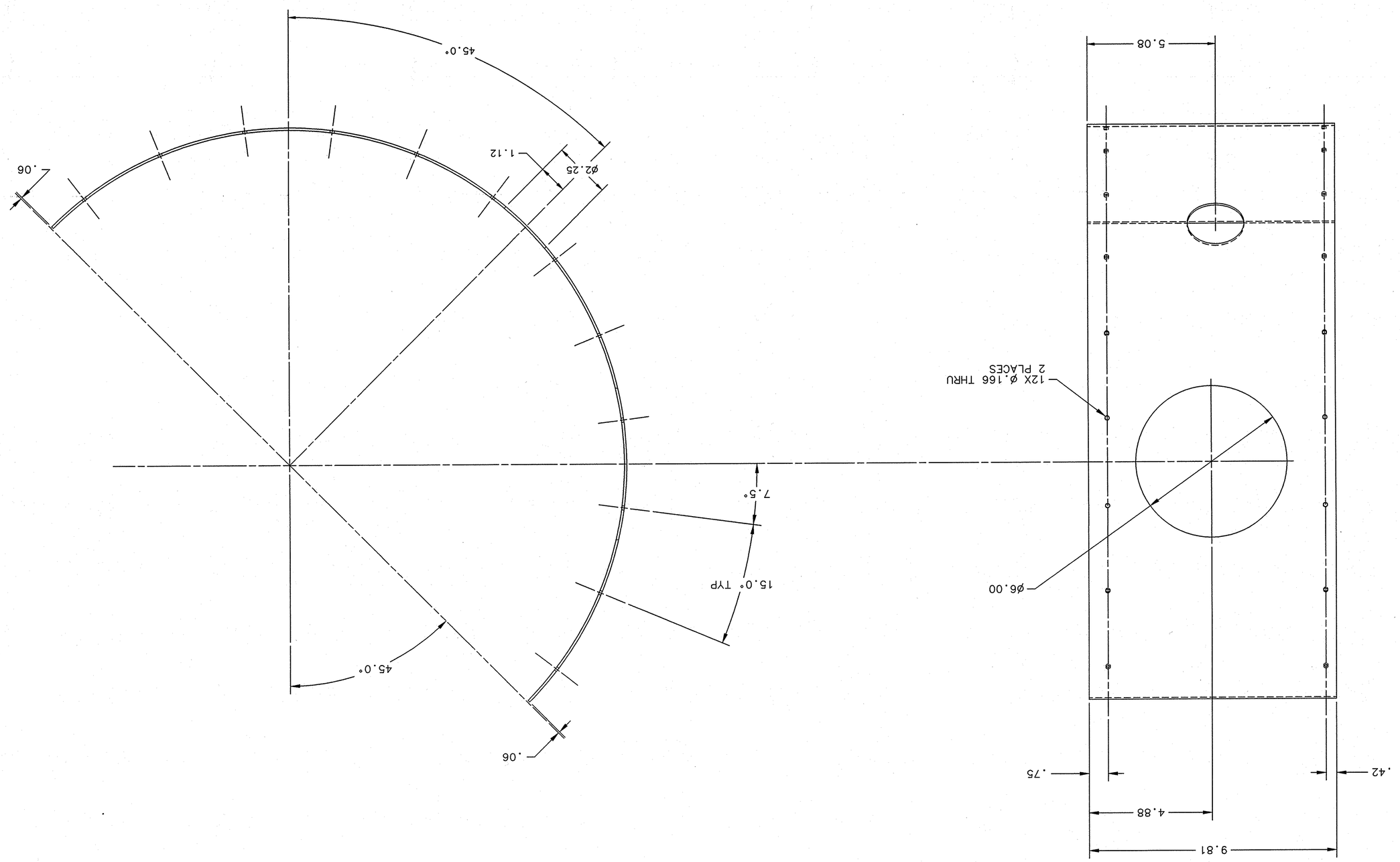


| | | | |
|---|---|---|---|
| SIZE E | DWG. NO. CRM-100-7044-1100 | | REV. – |
| SCALE 1:2 | USED ON ASSY NO. 115310-1001E | SHEET 3 OF 3 | |

DWG. NO. CRM-100-7044-1100 | SHT. 3 | REV. -