REVISION HISTORY				
ZONE	REV	DESCRIPTION	DATE	APPROVED

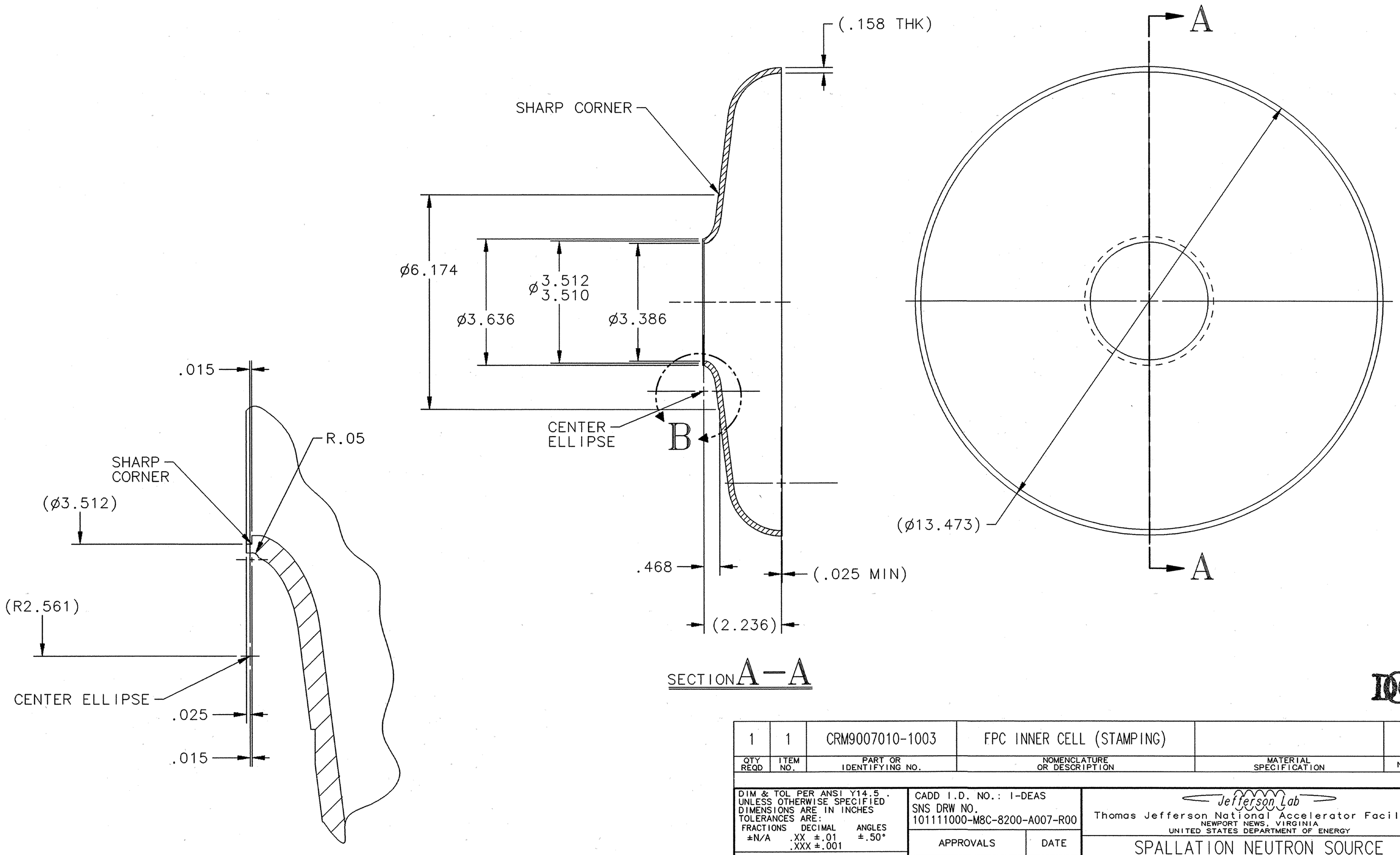

QTY REQD	ITEM NO.	PART OR IDENTIFYING NO.	NOMENCLATURE OR DESCRIPTION	MATERIAL SPECIFICATION	NOTES
1	1	CRM9007010-1003	FPC INNER CELL (STAMPING)		

DIM & TOL PER ANSI Y14.5.
UNLESS OTHERWISE SPECIFIED
DIMENSIONS ARE IN INCHES
TOLERANCES ARE:
FRACTIONS ±N/A
DECIMAL .XX ±.01 .XXX ±.001
ANGLES ±.50°

MATERIAL
SEE PARTS LIST

FINISH 125 UNLESS OTHERWISE NOTED
DEBURR & BREAK ALL SHARP EDGES

DO NOT SCALE DRAWING

CADD I.D. NO.: I-DEAS
SNS DRW NO.
101111000-M8C-8200-A007-R00

APPROVALS	DATE
DRAWN R. GETZ	26MAY00
CHECKED D. MACHIE	1-11-01
APPROVED	1/12/01
APPROVED P. Kneisel	1/12/01

Jefferson Lab
Thomas Jefferson National Accelerator Facility
NEWPORT NEWS, VIRGINIA
UNITED STATES DEPARTMENT OF ENERGY

SPALLATION NEUTRON SOURCE
0.61 BETA CRYOMODULE
CAVITY
FPC INNER CELL (FEM MACH)-DETAIL

SIZE C | DWG. NO. CRM9007010-1004 | REV. –

SCALE 1/2 | USED ON ASSY NO. CRM9007010-1026 | SHEET 1 OF 1

DWG. NO. CRM9007010-1004 | SHT. 1 | REV. –