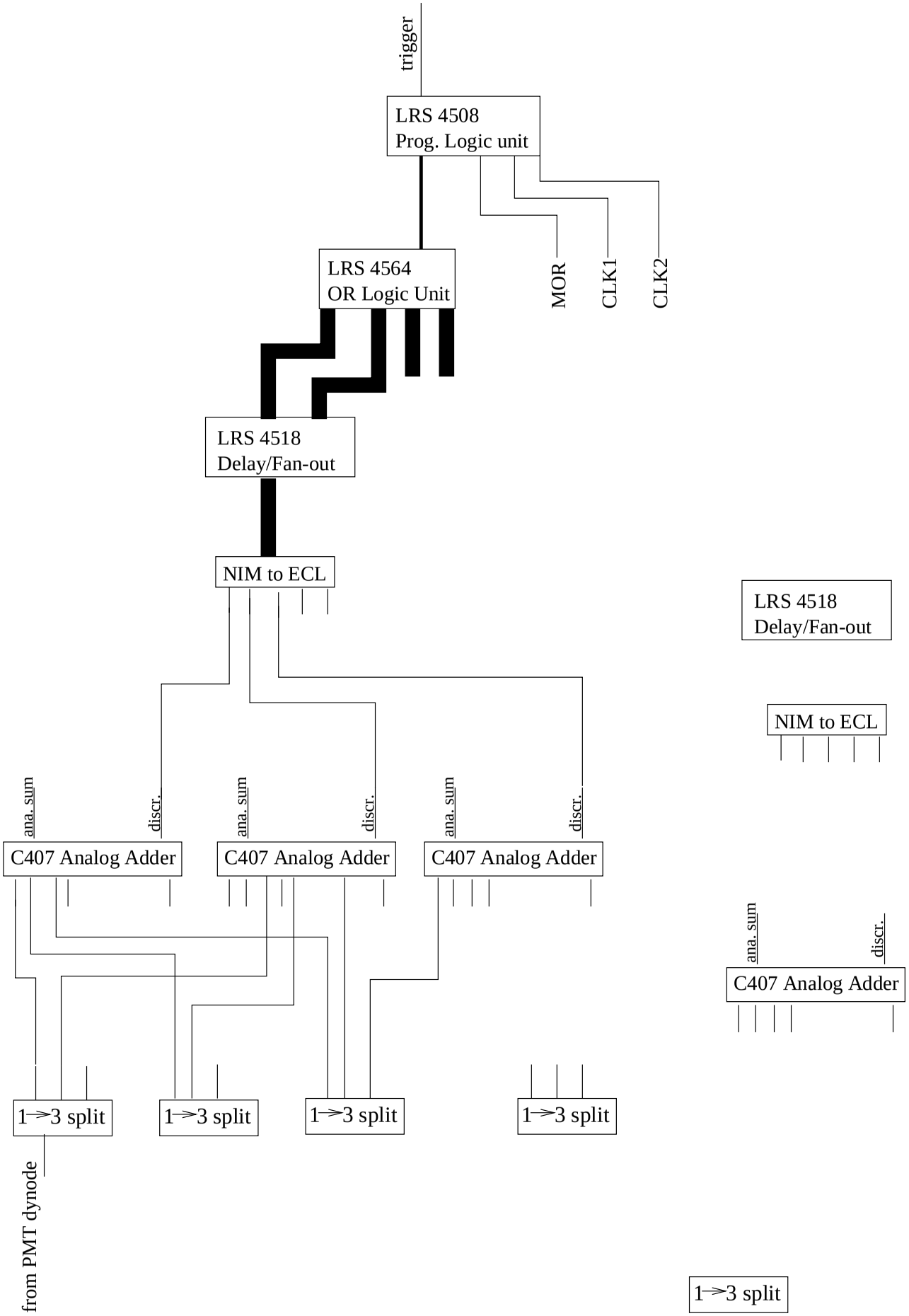
trigger
LRS 4508
Prog. Logic unit
MOR
CLK1
CLK2
LRS 4564
OR Logic Unit
LRS 4518
Delay/Fan-out
NIM to ECL
ana. sum
discr.
C407 Analog Adder
1→3 split
from PMT dynode
LRS 4518
Delay/Fan-out
NIM to ECL
ana. sum
discr.
C407 Analog Adder
1→3 split