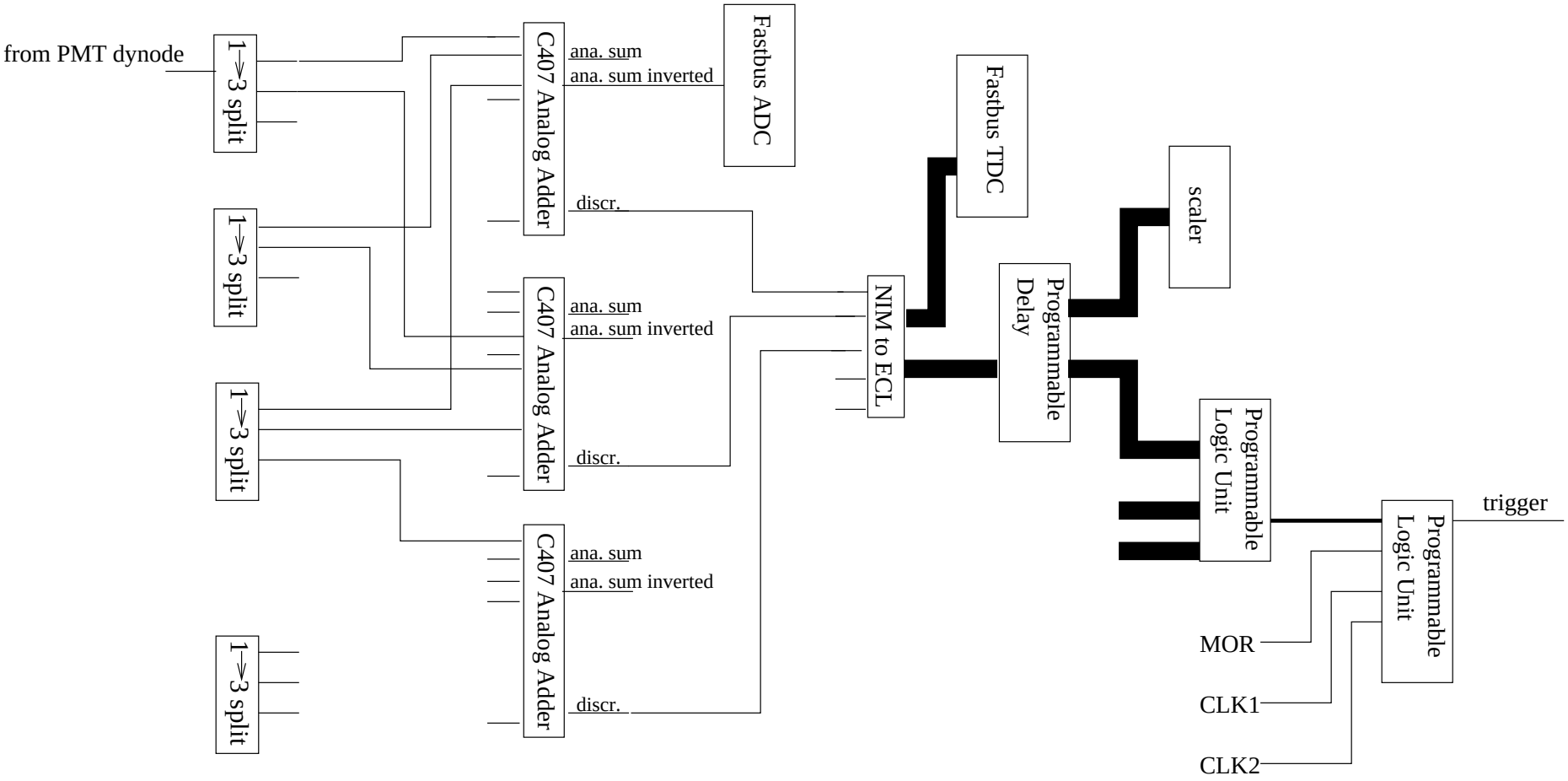

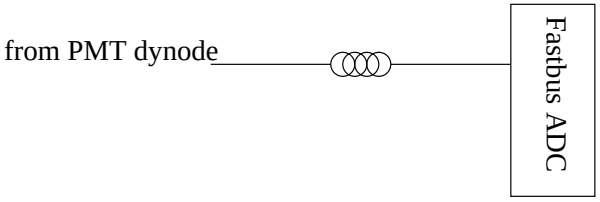

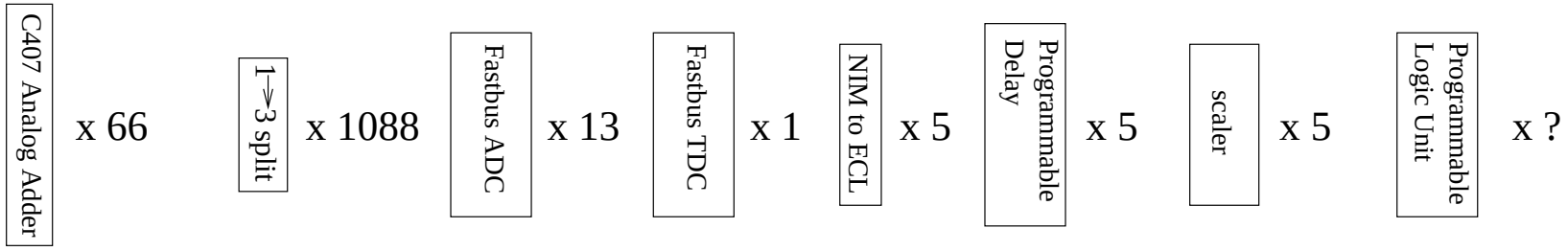

Total delay: approx 102 ns
plus cables

>100 MHz
22 ns

>100 MHz
12 ns

100 MHz
1-16ns

estim. ~65 MHz
20ns x 3 = 60ns