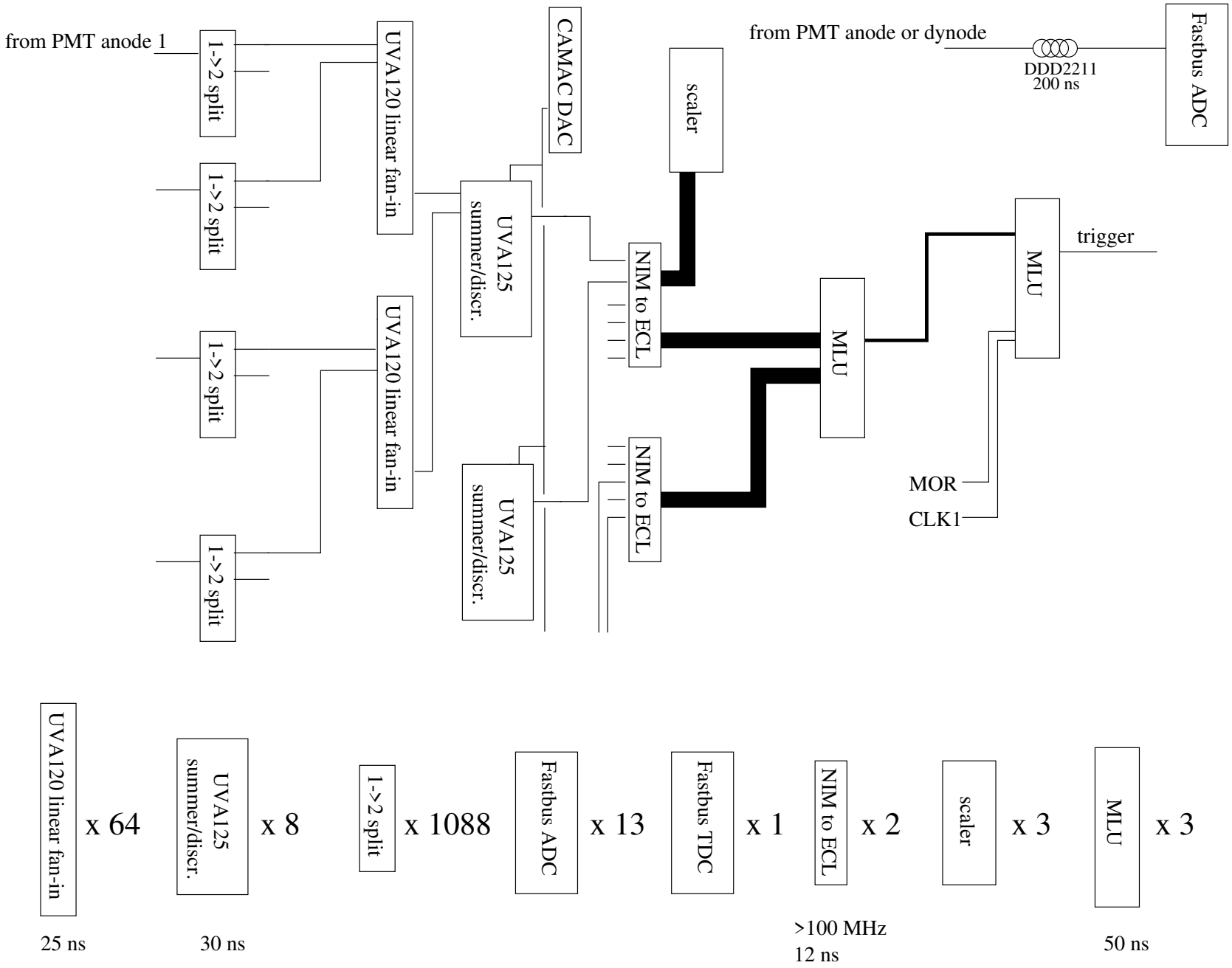

Total delay: 25 + 30 + 12 + 50 + 50 = 167 ns + 30 ns (cables) = **197 ns total delay**