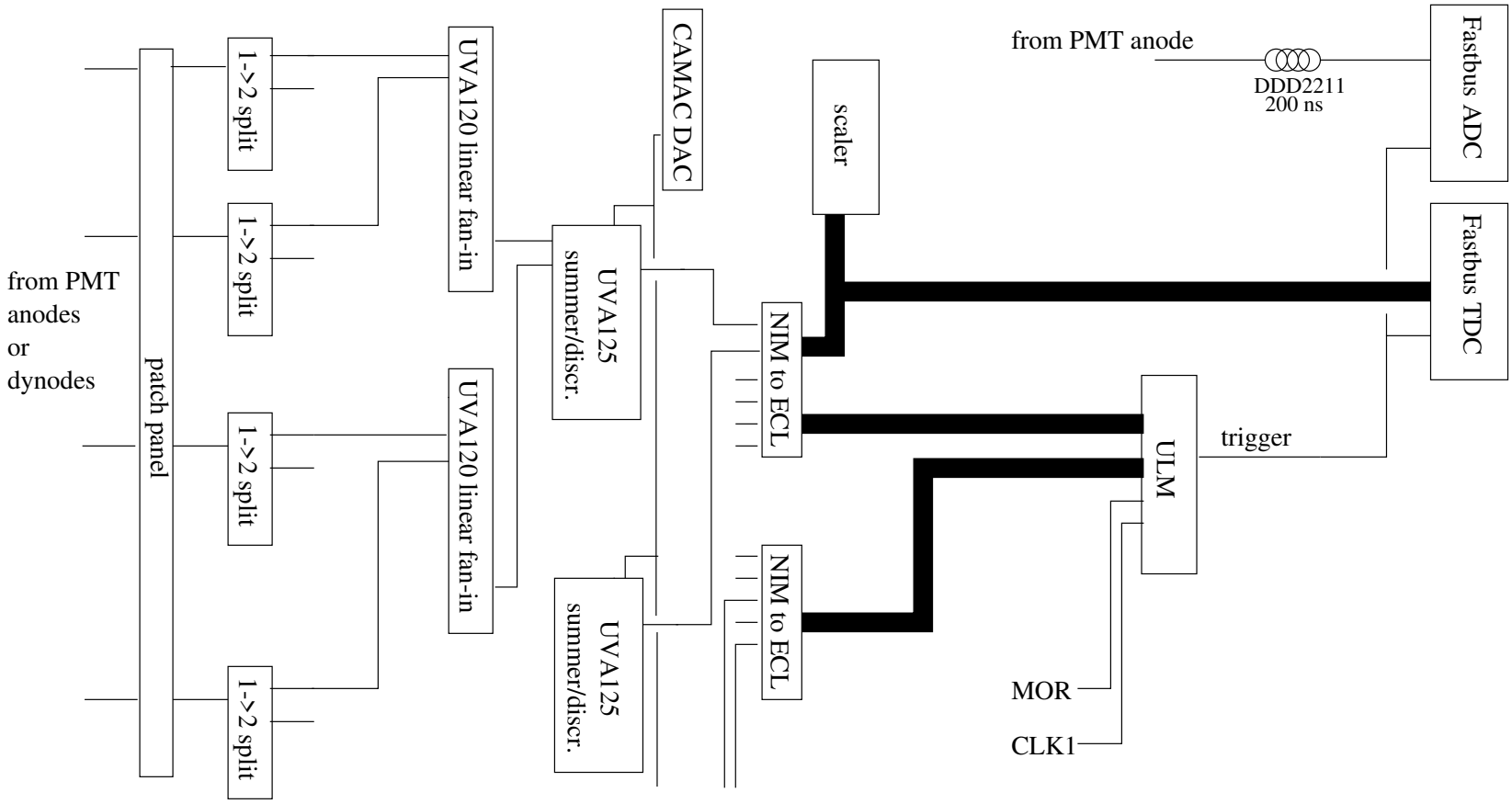


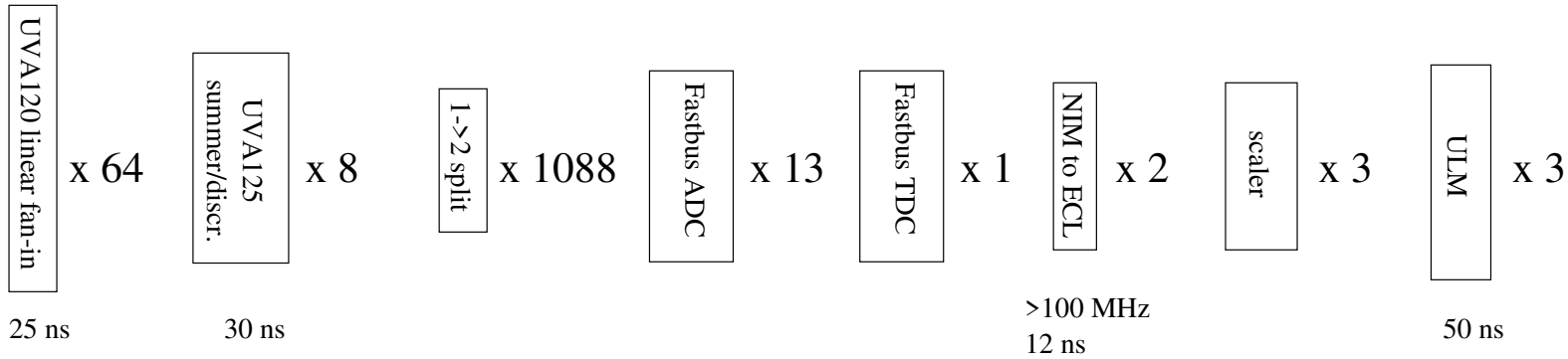


Total delay: 25 + 30 + 12 + 50 + 50 = 167 ns + 50 ns (cables) = **167 ns total delay**