REVISION HISTORY				
ZONE	REV	DESCRIPTION	DATE	APPROVED

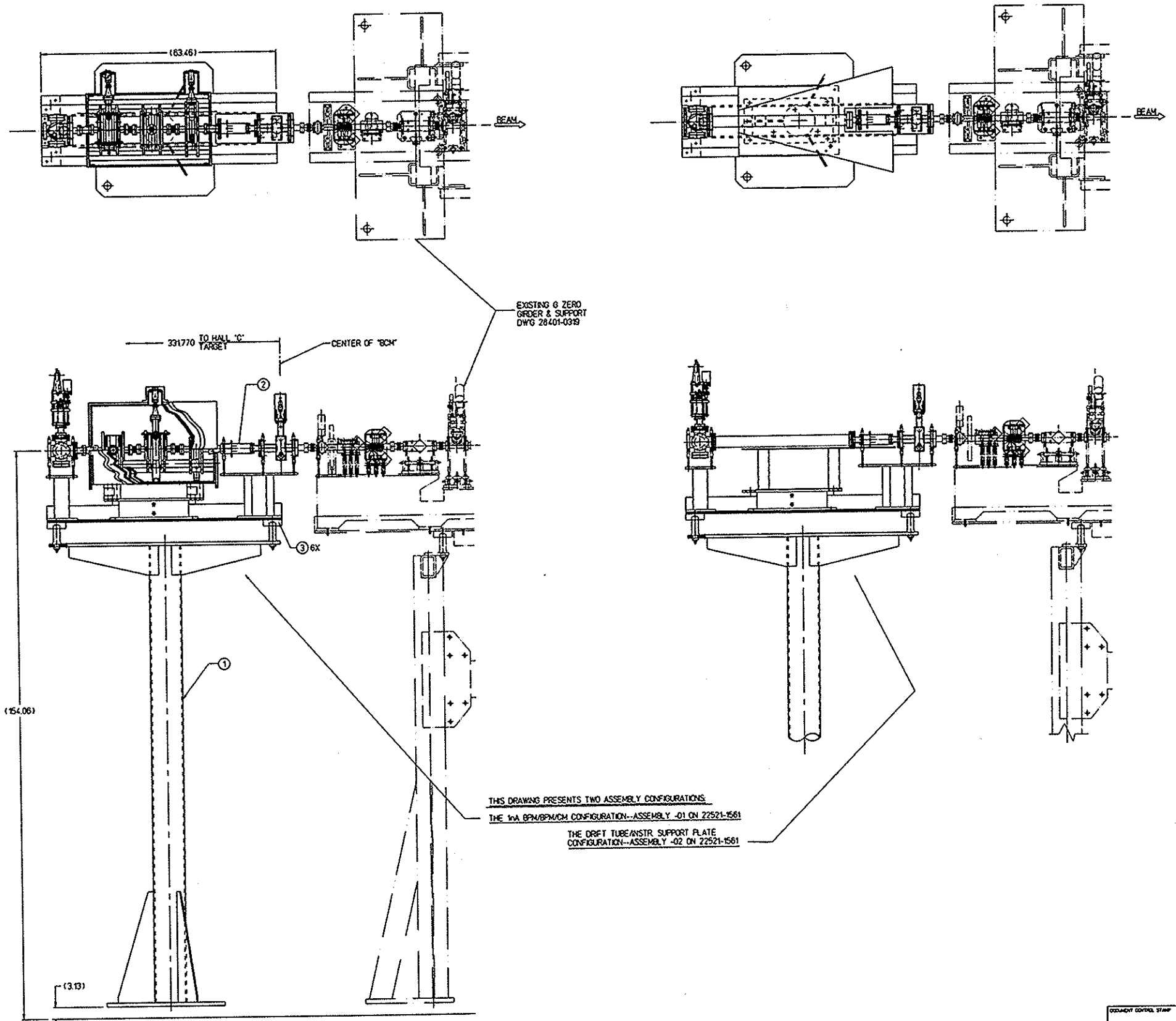

ITEM NO.	QUAN.	PART NO. IDENTIFICATION NO.	DESCRIPTION	MATERIAL SPECIFICATION	NOTES
6	3		.31-18 UNC SHCS X .75 LG.	STAINLESS	
1	2	22521-1561	GIRDER PROPER ASSEMBLY		
1	1	22521-1559	SUPPORT COLUMN INSTALLATION		

PARTS LIST

DOCUMENT CONTROL STAMP

MATERIAL: AS SPECIFIED

FINISH: UNCOATED 3.2μ (125μ) ALL OTHER SURFACES 1.6μ (63μ) UNLESS OTHERWISE NOTED

DO NOT SCALE DRAWING

UNLESS OTHERWISE SPECIFIED DIMENSIONS ARE IN INCHES TOLERANCES ON DECIMAL FRACTIONAL ANGLES ± N/A .XX ± N/A ± 30' .XXX ± N/A

THIRD ANGLE PROJECTION

TRACING NO. 28401-0320Rev-

APPROVALS | DATE

DRAWN C MURRAY | 7/24/03

CHECKED

APPROVED

APPROVED

Thomas Jefferson National Accelerator Facility
Jefferson Science Associates, LLC
Under DOE Contract No. DE-AC05-06OR23177

HALL C
G ZERO EXPERIMENT
HALO/BPM/BCM GIRDER
TOP ASSEMBLY

SIZE E | DWG. NO. 28401-0320 | REV. --

SCALE 1/10 | SHEET 1 OF 1