REVISION HISTORY				
ZONE	REV	DESCRIPTION	DATE	APPROVED
ALL	A	REVISED AS INSTALLED (SEE SHEET 1) MRZ 10/31/06	11/3/06	DAK

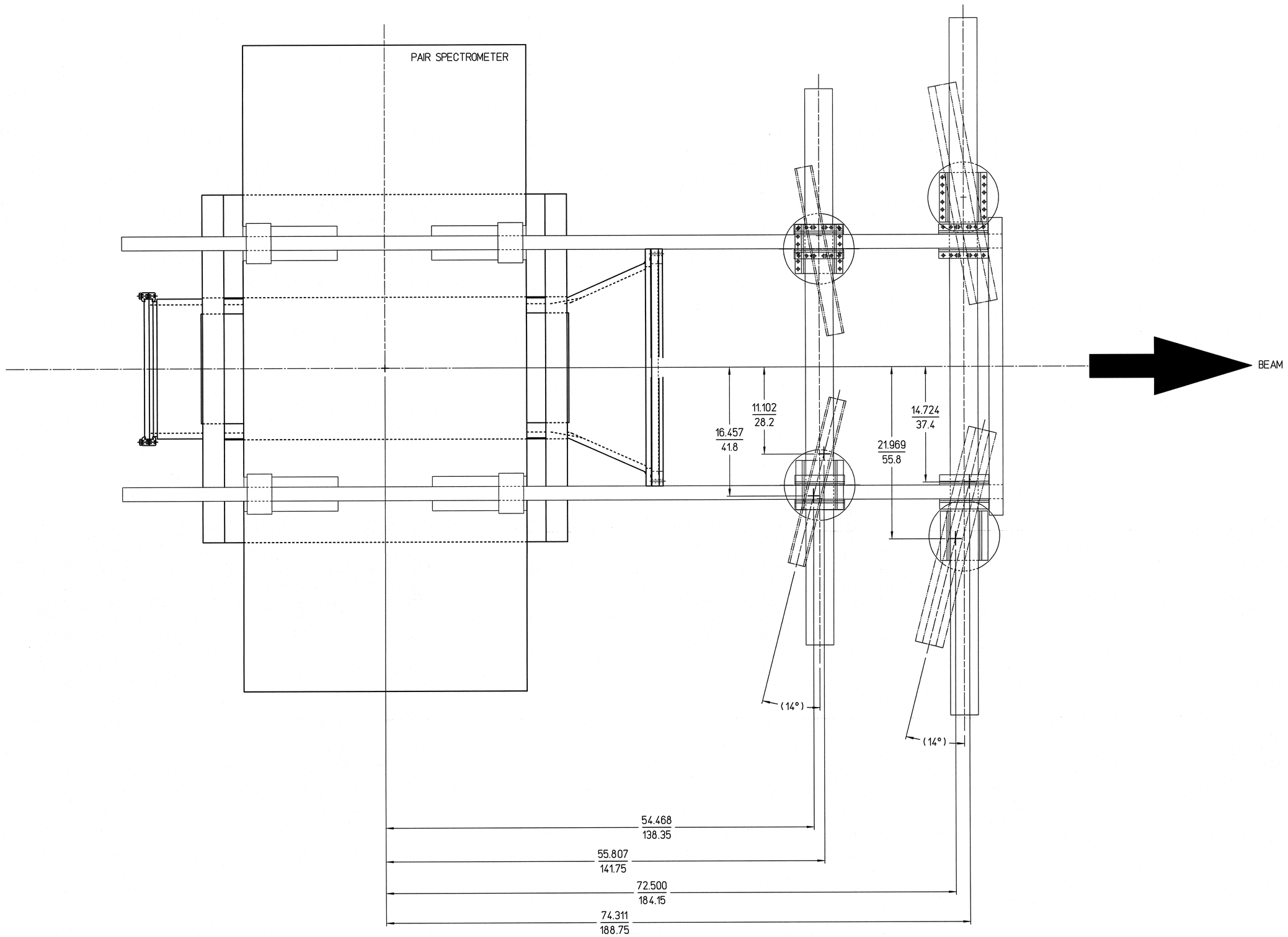

DOCUMENT CONTROL STAMP: DCG	DIM & TOL PER ASME Y14.5 UNLESS OTHERWISE SPECIFIED DIMENSIONS ARE IN INCHES TOLERANCES ARE: FRACTIONS ± N/A; DECIMAL .X ± N/A, .XX ± .02, .XXX ± .005; ANGLES ± .50°	TRACKING NO. /wbs/6/zarecky/66000/4600/66840e04661_03.revA	Thomas Jefferson National Accelerator Facility, NEWPORT NEWS, VIRGINIA, UNITED STATES DEPARTMENT OF ENERGY
MATERIAL: N/A	THIRD ANGLE PROJECTION	APPROVALS / DATE	HALL B CLAS BEAM LINE ASSEMBLY FROM TAGGER MAGNET THRU FWD CARRIAGE FOR g13a RUN (FALL 2006)
FINISH MACHINED SURFACES N/A UNLESS OTHERWISE NOTED; DEBURR & BREAK ALL SHARP EDGES		DRAWN: M. ZARECKY 10/13/06	SIZE: E; DWG. NO.: 66840-E-04661; REV.: A
DO NOT SCALE DRAWING		CHECKED: D. KASHY 10/18/06	SCALE: 1/6; USED ON ASSY NO.: -; SHEET 3 OF 3
		APPROVED: D. KASHY 10/18/06	
		APPROVED: D. KASHY 10/18/06	

Me10