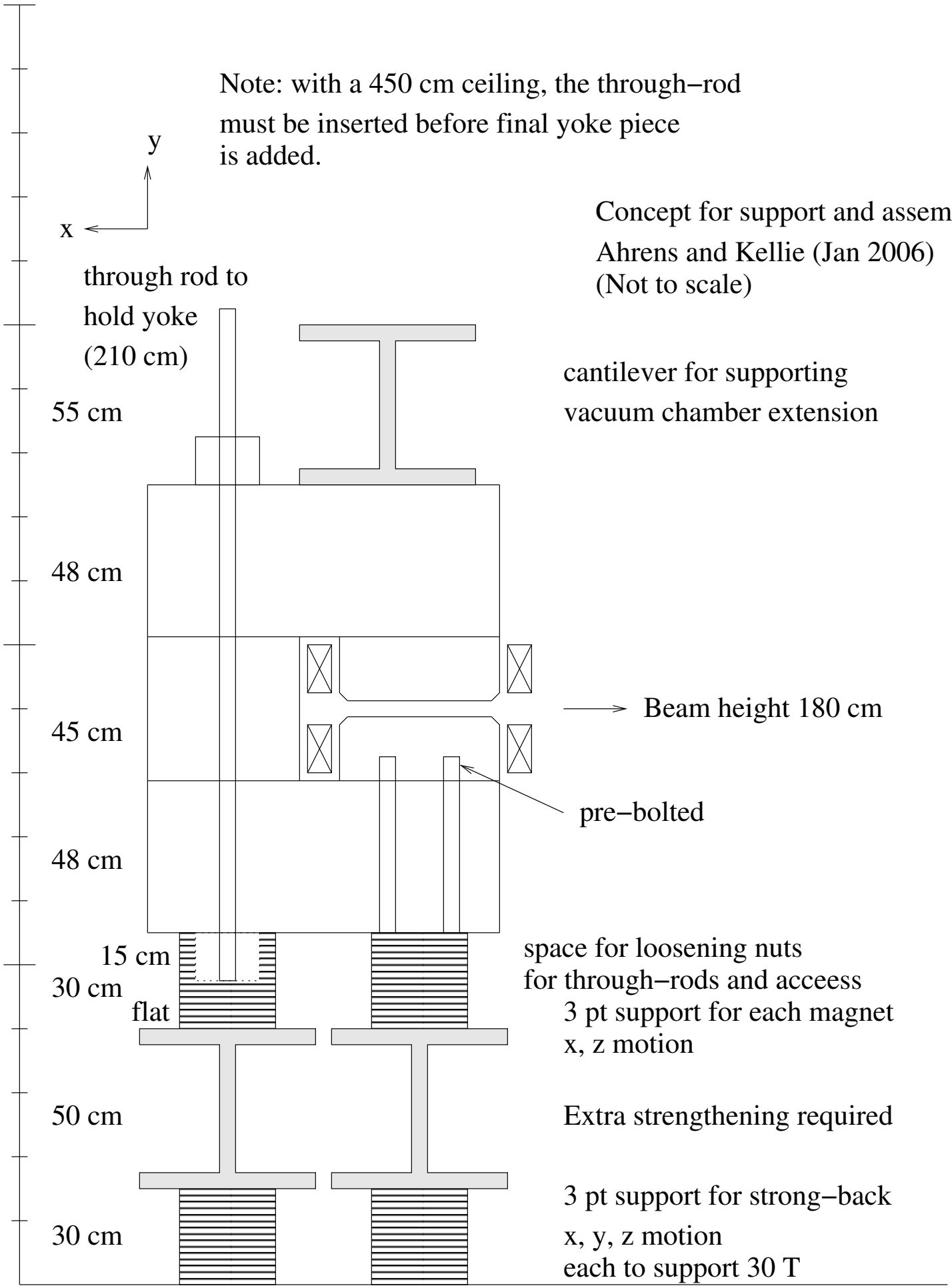
Note: with a 450 cm ceiling, the through−rod
must be inserted before final yoke piece
is added.
y
x
Concept for support and assembly
Ahrens and Kellie (Jan 2006)
(Not to scale)
through rod to
hold yoke
(210 cm)
55 cm
cantilever for supporting
vacuum chamber extension
48 cm
45 cm
Beam height 180 cm
pre−bolted
48 cm
15 cm
space for loosening nuts
for through−rods and acceess
30 cm
flat
3 pt support for each magnet
x, z motion
50 cm
Extra strengthening required
3 pt support for strong−back
30 cm
x, y, z motion
each to support 30 T