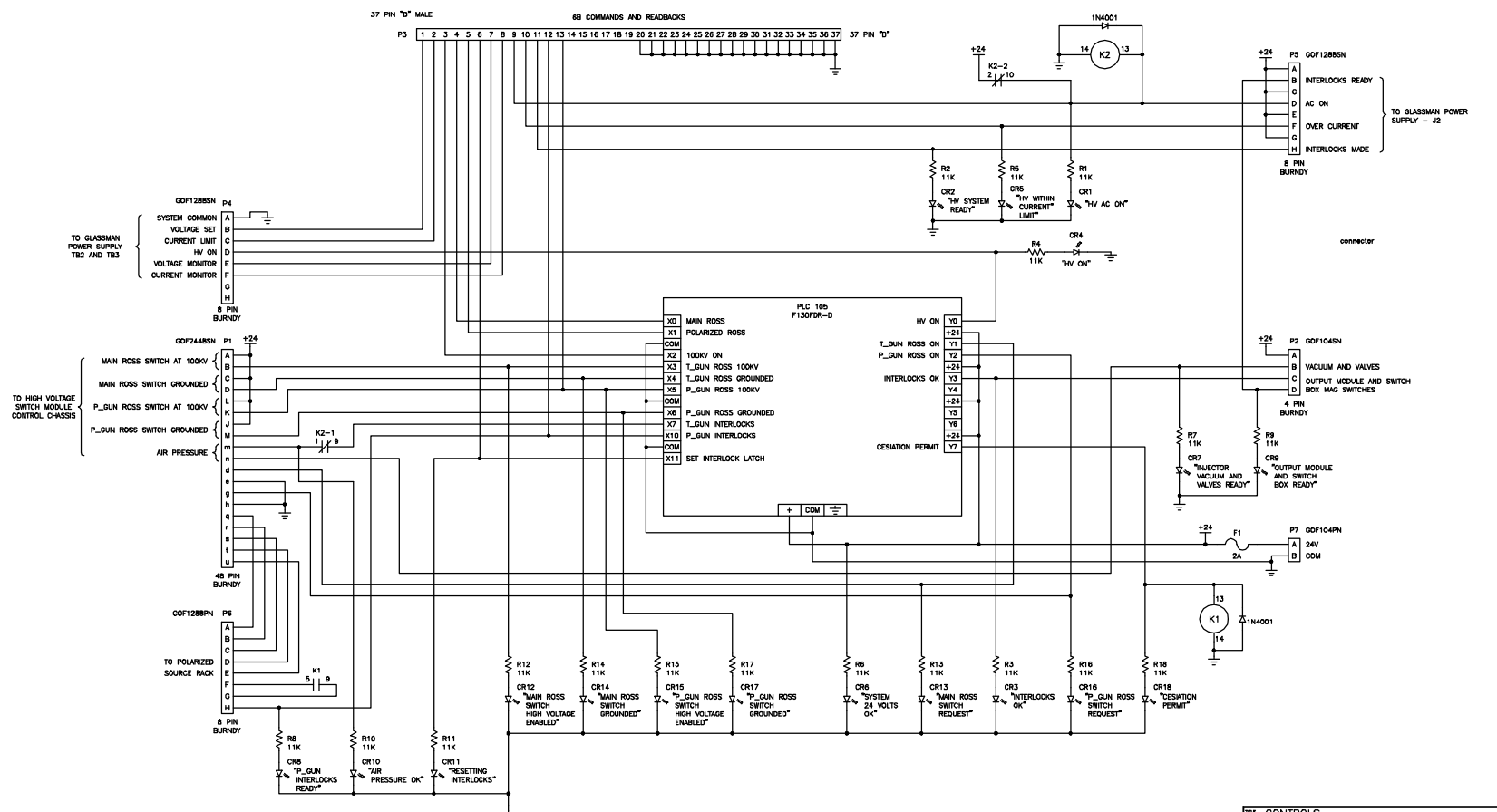

NOTES:

1. FOR HIGH VOLTAGE INTERFACE CHASSIS ASSEMBLY AND FABRICATION DETAILS SEE JEFFERSON LAB DWG NO. C0470D01

REV.	REMARKS	DRAWN	DATE	APPVD
A	REVISED PER ECO E0579	JCW	06/24/98	

TITLE: CONTROLS
UNIFIED HIGH VOLTAGE SYSTEM
HIGH VOLTAGE INTERFACE CHASSIS
WIRING DIAGRAM

DRAWN: D. WILLIAMS DATE 3/31/98
CHECKED: UNKNOWN DATE
DESIGNER: E. WOODWORTH DATE 3/31/98
DRAFTSMAN: E. WOODWORTH

Thomas Jefferson National Accelerator Facility
using DOE's Jefferson Lab

CAD LO NO. WO:CONV/C0469D / C0469D1.DWG
SIZE D
DRAWING NO. C0469D01
REV. A
SCALE NONE
SHOWN ON —
SHEET 1 OF 1