Jefferson Lab Alignment Group

Data Transmittal

TO: Y. Gotra		**DATE:** 08 Feb 2018
FROM: Chris Gould	**Checked:**	**# :** B1851

DETAILS:

Below are the results of the MVT and SVT survey carried out November 16th, 2017. Because of mechanical inferences, the solenoid and target were positioned 19.5 mm upstream of the original ideal location (see DT1829 and DT1848). The locations listed below are in a beam following coordinate system relative to the new ideal Z location. A +X is beam left, a +Y is up and a + Z is downstream. Values are in millimeters.

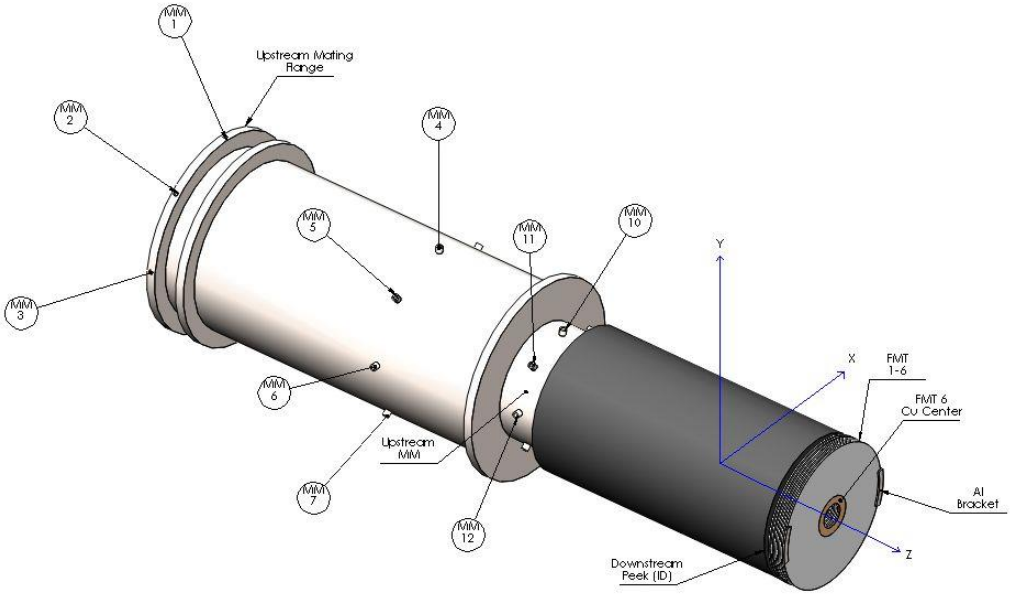

		BFS		
		X	**Y**	**Z**
MVT	**MM1**	-0.06	318.42	-1661.29
	MM2	-225.68	224.97	-1660.48
	MM3	-319.19	-0.61	-1660.20
	MM4	-0.35	258.26	-977.11
	MM5	-183.79	184.18	-975.78
	MM6	-259.84	-0.92	-976.05
	MM7	-184.12	-184.50	-976.55
	MM8	-0.25	-261.38	-976.76
	MM9	260.55	-1.26	-977.04
	MM10	0.93	198.55	-593.07
	MM11	-140.31	140.10	-593.12

	MM12	-198.87	-0.86	-593.18
	MM13	0.43	-200.38	-593.47
	MM14	141.90	140.10	-593.24
	MM15	318.89	-0.69	-1661.46
	MM16	225.49	224.95	-1661.51
	MM17	-0.21	-319.76	-1661.18
	MM18	-225.84	-226.26	-1660.57

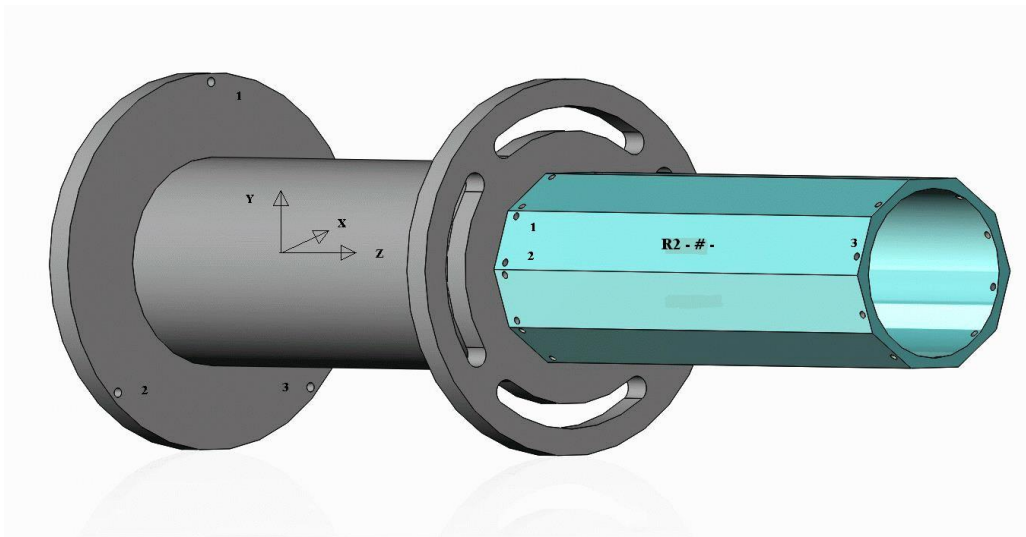

SVT Region 1	**R111**	-16.78	-68.19	-286.13
	R112	17.89	-68.14	-286.08
	R113	4.63	-68.46	122.70
	R121	-53.66	-44.88	-286.11
	R122	-25.59	-65.26	-286.08
	R123	-36.17	-57.66	122.75
	R131	-69.68	-4.52	-286.16
	R132	-58.94	-37.51	-286.10
	R133	-62.83	-25.07	122.76
	R141	-58.94	37.67	-286.17
	R142	-69.63	4.73	-286.11
	R143	-65.21	17.10	122.70
	R151	-25.44	65.52	-286.21
	R152	-53.48	45.14	-286.12
	R153	-42.37	52.58	122.69
	R161	18.04	68.39	-286.28
	R162	-16.65	68.37	-286.19
	R163	-2.95	67.85	122.69
	R172	26.78	65.51	-286.29
	R173	37.94	57.06	122.64

	R181	71.04	4.71	-286.32
	R182	60.27	37.71	-286.21
	R183	64.59	24.51	122.64
	R191	60.13	-37.53	-286.20
	R192	70.87	-4.52	-286.31
	R193	66.89	-17.68	122.67
	R1101	26.63	-65.34	-286.17
	R1102	54.69	-44.93	-286.19
	R1103	44.05	-53.15	122.75

SVT Region 2	**R211**	-16.82	-95.78	-246.64
	R212	17.87	-95.75	-246.70
	R213	4.49	-95.55	162.20
	R221	-56.71	-78.72	-246.60
	R222	-25.44	-93.79	-246.67
	R223	-37.51	-87.69	162.16
	R231	-85.26	-46.04	-246.60
	R232	-63.59	-73.23	-246.57
	R233	-71.98	-62.33	162.15
	R241	-96.83	-4.28	-246.65
	R242	-89.12	-38.08	-246.60
	R243	-91.92	-24.68	162.16
	R251	-88.99	38.13	-246.80
	R252	-96.71	4.34	-246.68
	R253	-93.45	17.52	162.17
	R261	-63.48	73.23	-246.74
	R262	-85.12	46.11	-246.75
	R263	-76.36	56.78	162.16
	R271	-25.35	93.78	-246.85
	R272	-56.58	78.73	-246.76
	R273	-44.10	84.56	162.08
	R281	17.96	95.80	-246.88
	R282	-16.69	95.78	-246.78
	R283	-2.85	95.67	162.11
	R291	57.81	78.85	-246.70
	R292	26.58	93.87	-246.77
	R293	39.08	88.25	162.17
	R2101	86.37	46.24	-246.83
	R2102	64.83	73.26	-246.83
	R2103	73.54	62.44	162.04
	R2111	97.94	4.43	-246.83
	R2112	90.22	38.22	-246.87
	R2113	93.41	24.84	162.03

	R2121	90.16	-38.22	-246.83
	R2122	97.89	-4.43	-246.78
	R2123	95.04	-17.63	162.01
	R2131	64.65	-73.31	-246.75
	R2132	86.28	-46.20	-246.80
	R2133	78.04	-56.74	162.08
	R2141	26.46	-93.84	-246.64
	R2142	57.68	-78.80	-246.80
	R2143	45.61	-84.56	162.16

SVT Region 3	**R311**	-16.69	-123.02	-207.70
	R312	18.01	-123.01	-207.71
	R313	4.24	-122.88	201.19
	R321	-57.82	-109.66	-207.70
	R322	-25.21	-121.52	-207.70
	R323	-38.14	-116.66	201.20
	R331	-91.92	-83.04	-207.70
	R332	-65.31	-105.34	-207.70
	R333	-75.85	-96.31	201.20
	R341	-114.84	-46.37	-207.70
	R342	-97.48	-76.41	-207.70
	R343	-104.31	-64.30	201.20
	R351	-123.84	-4.07	-207.71
	R352	-117.81	-38.25	-207.70
	R353	-120.12	-24.49	201.20
	R361	-117.84	38.75	-207.73
	R362	-123.84	4.59	-207.71
	R363	-121.36	18.34	201.18
	R371	-97.54	76.95	-207.74
	R372	-114.88	46.89	-207.73
	R373	-107.86	59.00	201.16
	R381	-65.41	105.90	-207.75
	R382	-91.99	83.58	-207.74
	R383	-81.29	92.59	201.16
	R391	-25.31	122.10	-207.77
	R392	-57.91	110.22	-207.76
	R393	-44.82	115.07	201.14
	R3101	17.91	123.63	-207.77
	R3102	-16.79	123.62	-207.77
	R3103	-2.86	123.71	201.13
	R3111	59.05	110.28	-207.77
	R3112	26.43	122.13	-207.77
	R3113	39.52	117.49	201.13

	R3121	93.13	83.66	-207.78
	R3122	66.53	105.95	-207.77
	R3123	77.23	97.16	201.13
	R3131	116.06	46.98	-207.77
	R3132	98.70	77.03	-207.78
	R3133	105.69	65.14	201.12
	R3141	125.06	4.69	-207.76
	R3142	119.02	38.86	-207.77
	R3143	121.50	25.33	201.13
	R3151	119.05	-38.14	-207.74
	R3152	125.06	-3.97	-207.76
	R3153	122.74	-17.49	201.15
	R3161	98.76	-76.33	-207.74
	R3162	116.10	-46.28	-207.75
	R3163	109.24	-58.15	201.15
	R3171	66.63	-105.29	-207.72
	R3172	93.20	-82.96	-207.73
	R3173	82.66	-91.75	201.17
	R3181	26.53	-121.49	-207.71
	R3182	59.14	-109.60	-207.71
	R3183	46.20	-114.23	201.19