PREX/CREX Status Update

Ciprian Gal
University of Virginia

Contact persons: PREX: Kent Paschke
CREX: Seamus Riordan

Motivation

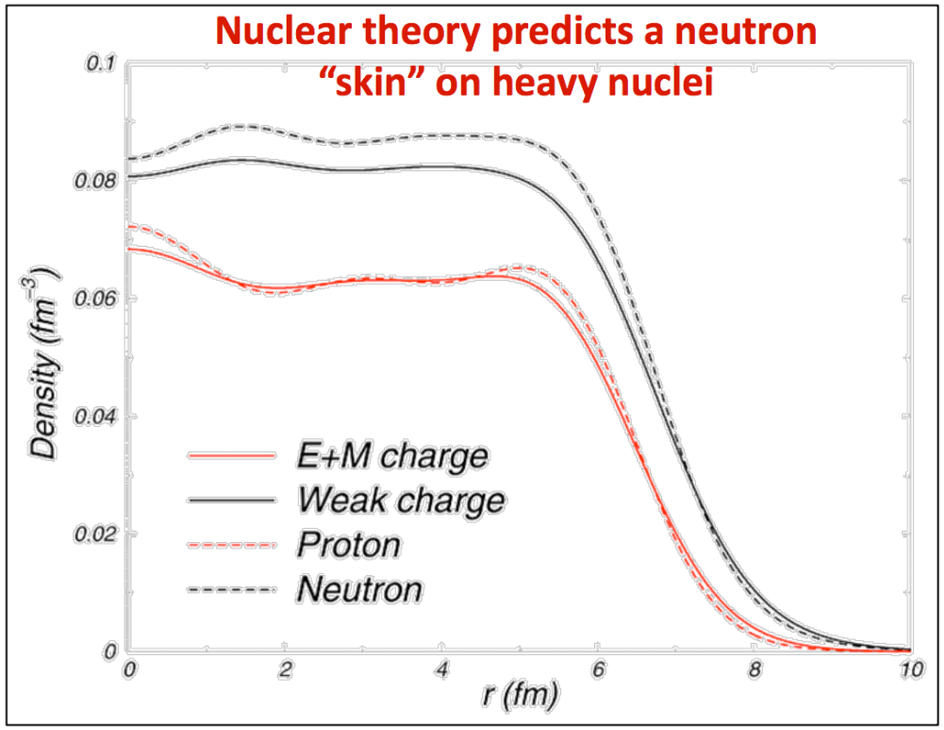

$$A_{\mathrm{PV}} \approx \frac{G_{\mathrm{F}} Q^2}{4\pi\alpha\sqrt{2}} \frac{F_{\mathrm{W}}}{F_{\mathrm{ch}}}$$

- parity violation experiment can access weak charge, which is dominated by the neutron

	proton	neutron
Electric charge	1	0
Weak charge	~0.08	1

- The neutron radius inside nuclei not as well understood as the proton radius
- Theoretical models based on available data make different predictions for the neutron skin of heavy nuclei
  - An A_{PV} measurement of the neutron skin is a clean and complementary measurement
  - these results will inform our knowledge on the nuclear equation of state and symmetry energy
- Once the EOS is pinned down several things can be inferred, including the radius of neutron stars

Theory

- The Pb neutron rich nucleus is a good approximation for a neutron star (contributions from edge effects are minimal)
- Having experimental results to constrain and guide models is needed for high A nuclei
- So far the probes for stable medium and heavy nuclei have been strongly interacting, having a somewhat more complicated interpretation

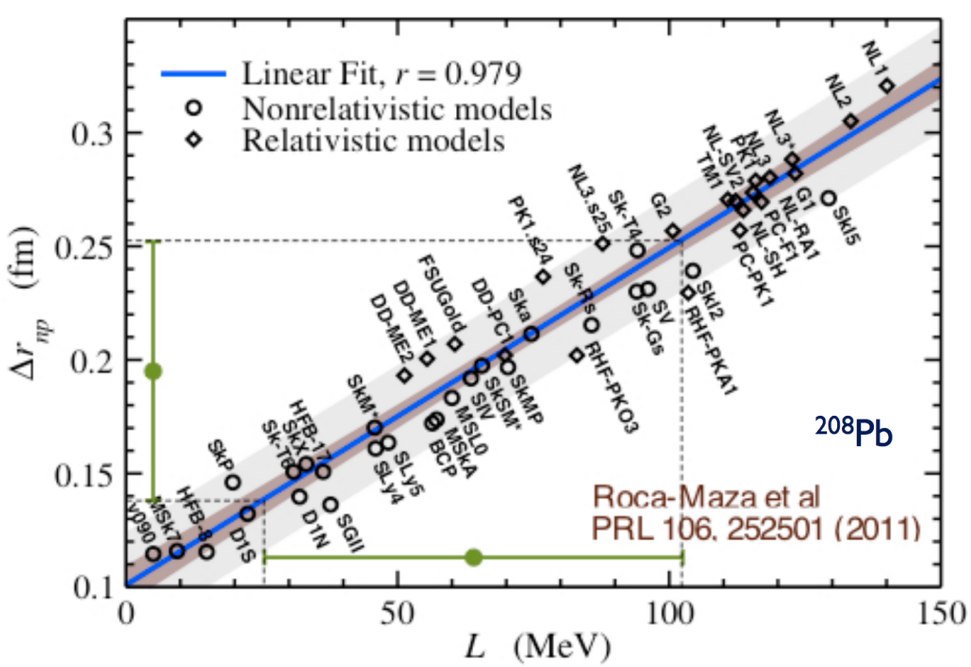

There is a clear correlation between the density slope of the symmetry energy and the neutron skin of heavy nuclei

Why two measurements?

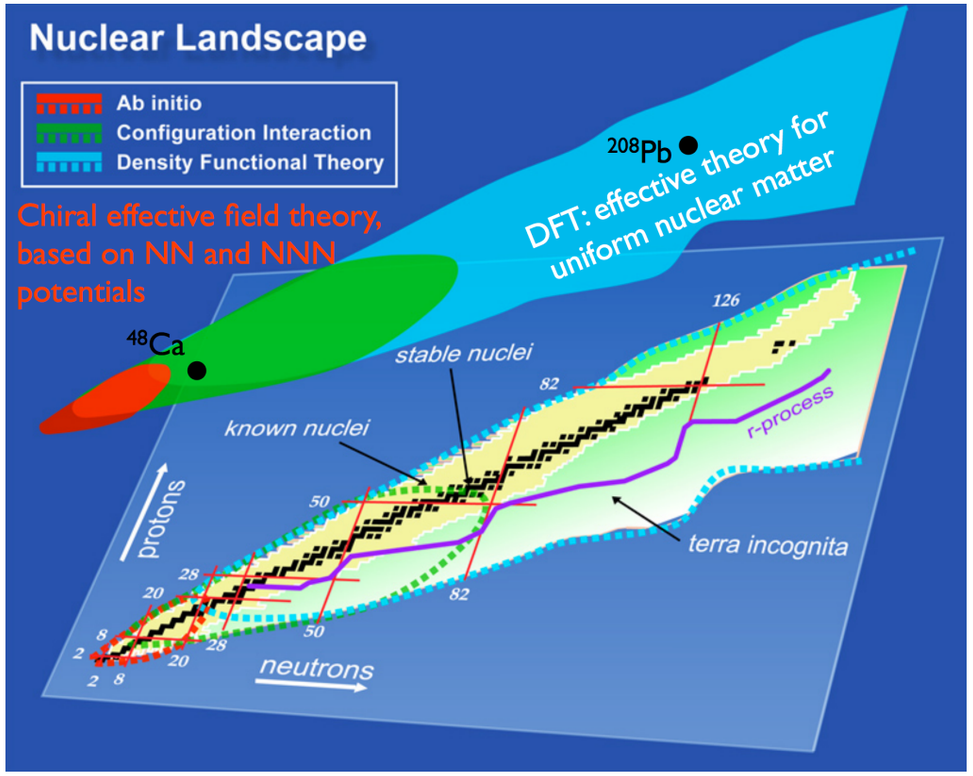

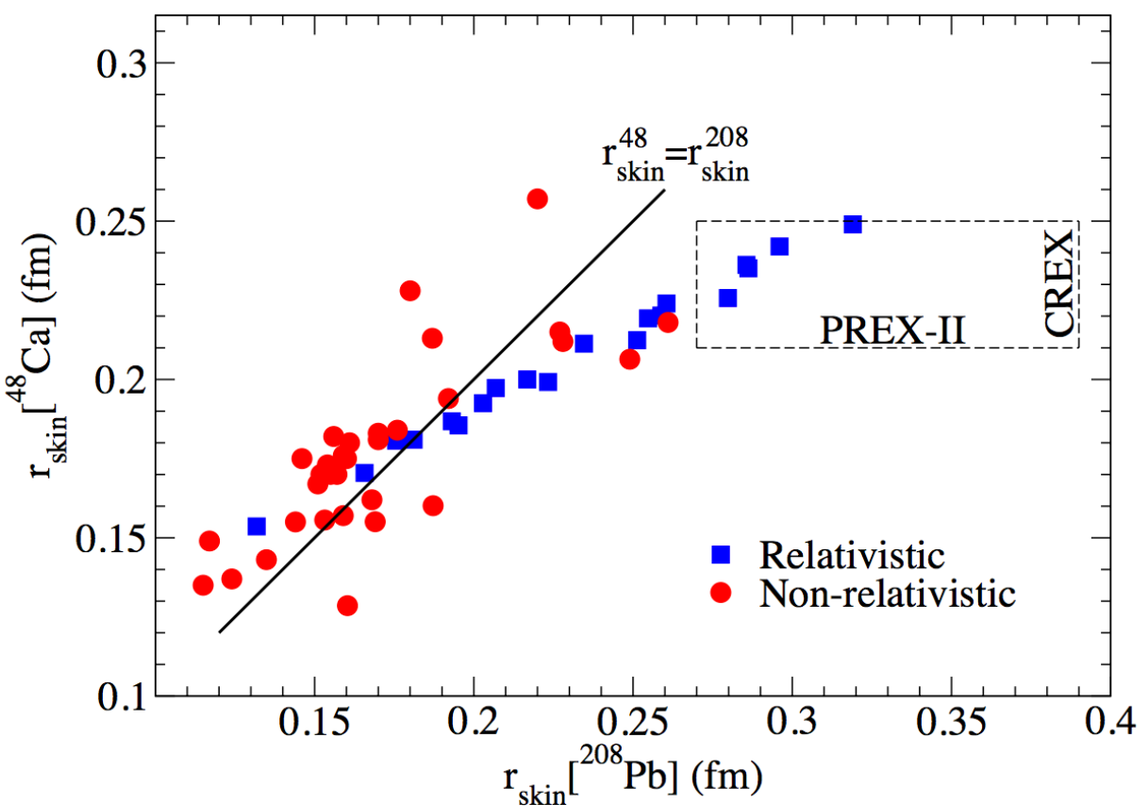

- ^{208}Pb predictions are made using density functional theory, assuming uniform nuclear matter
- ^{48}Ca predictions can be made with microscopic calculations now (http://arxiv.org/abs/1509.07169) and don't need to take into account significant size nuclear size effects
- Having both experimental results can help bridge the divide between these two methods of computation
- Most of the models show a clear correlation between the neutron radius of ^{208}Pb and ^{48}Ca

Why two measurements?

- The two measurements are sensitive to different parameters used in the theoretical calculations

- The correlations of some parameters can also be tested using two separate measurements

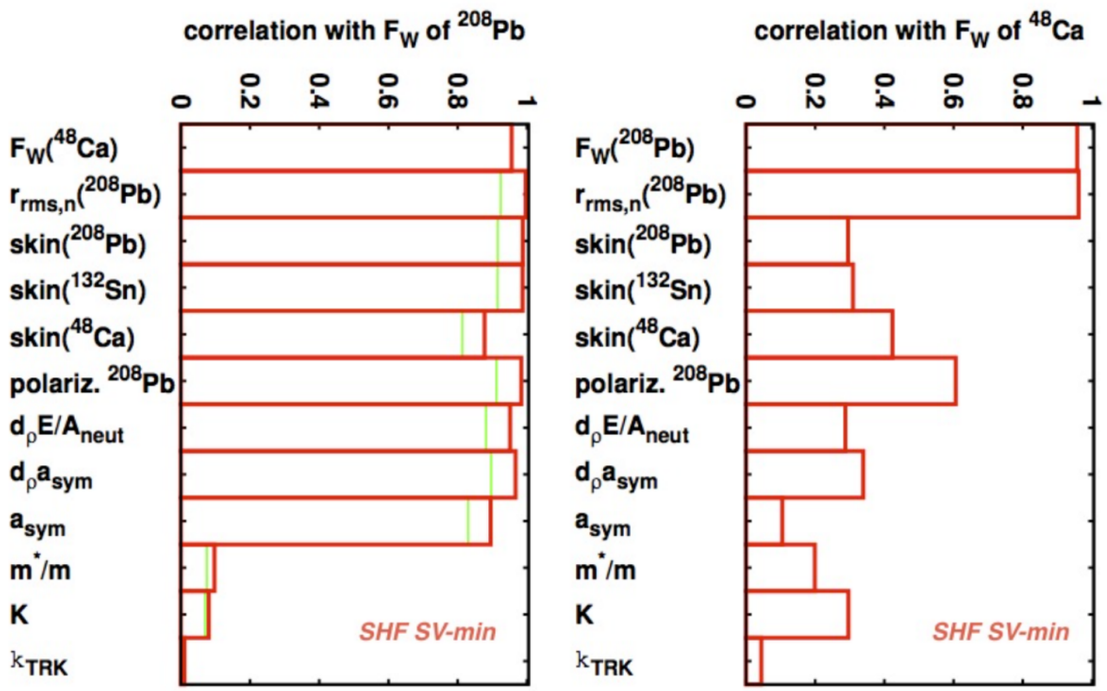

Jorge Piekarewicz

PREX I results

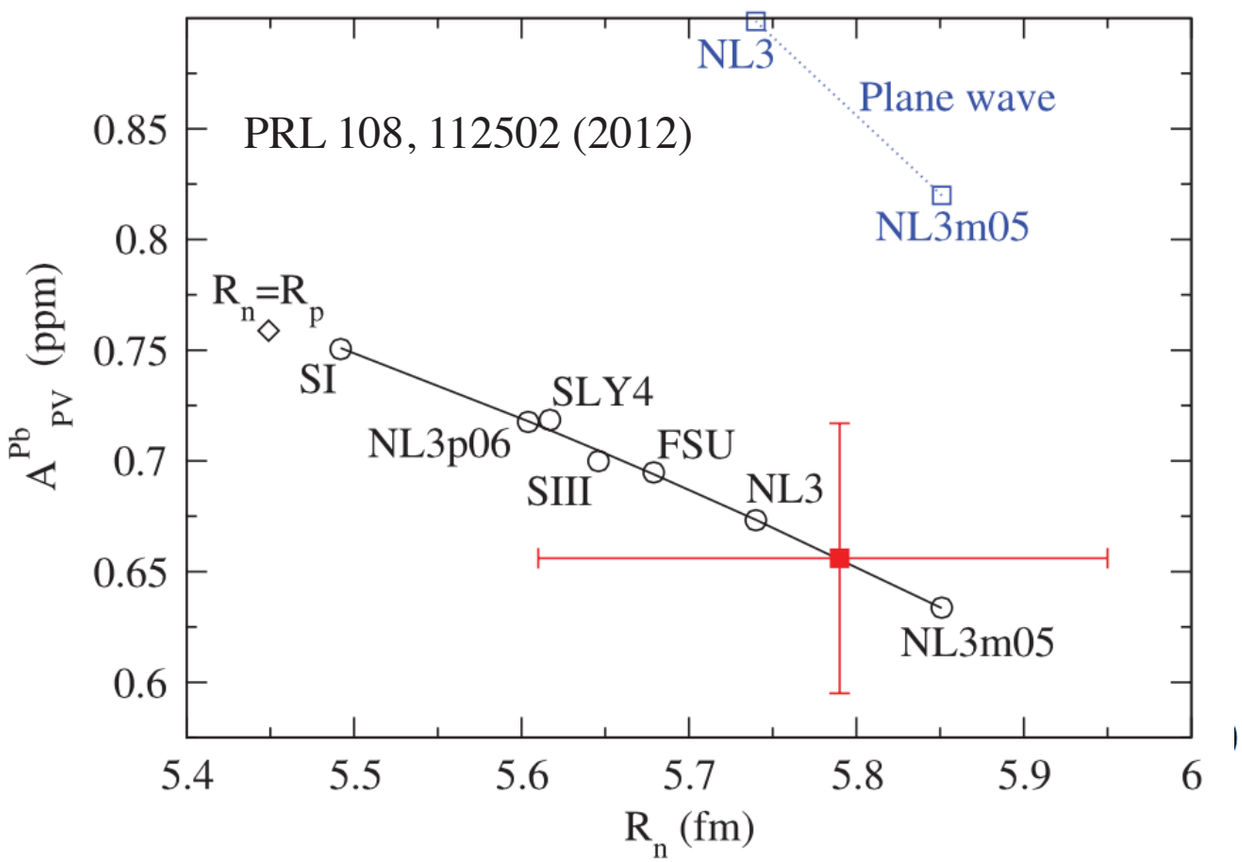

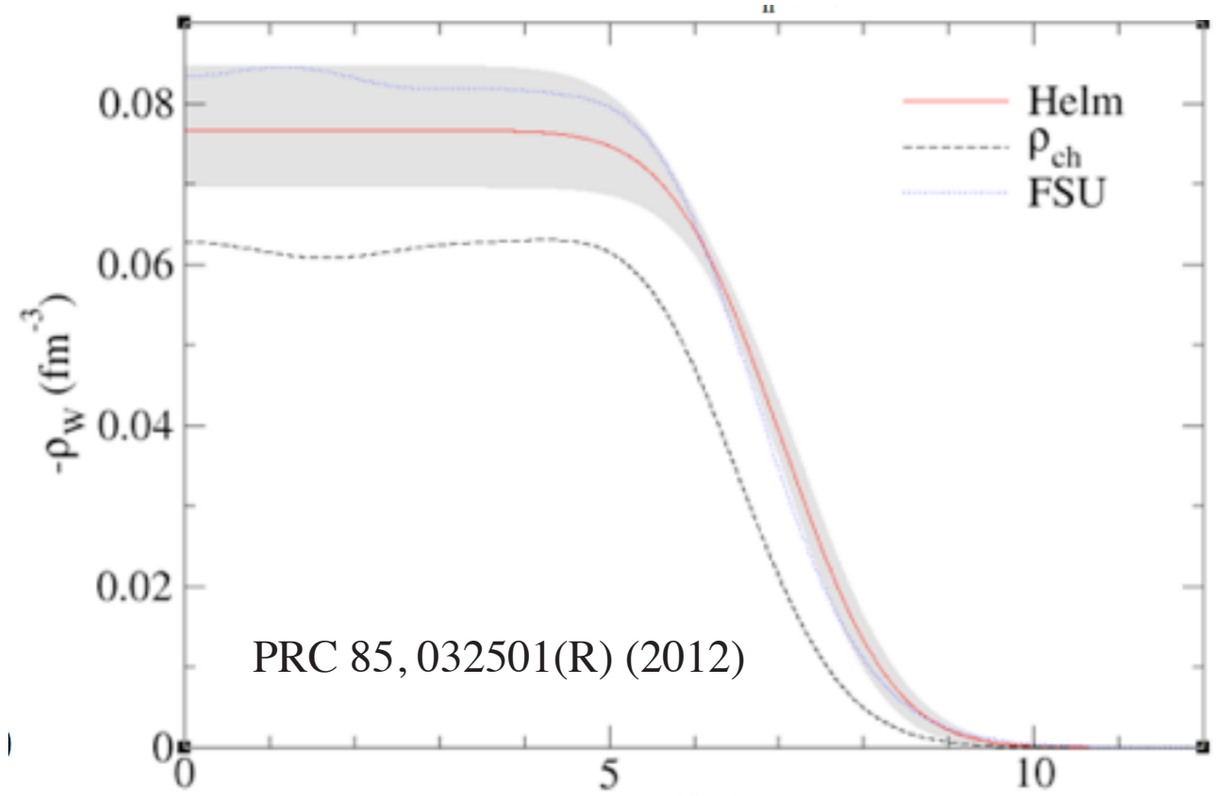

APV = 0.657 ± 0.060(stat) ± 0.014(syst) ppm

- First electroweak observation that there is a neutron skin around a heavy nucleus (R_n - R_p = $0.33^{+0.16}_{-0.18}$)

- Current central value does not match with neutron star radius measurements and existing models

PREX II/CREX systematics

PREX: 25+10 days, 3% stat, 0.06 fm
CREX: 35+10 days, 2% stat, 0.02fm

PREX
E=1.1 GeV, 5°
A=0.6 ppm

Charge Normalization	0.1%
Beam Asymmetries	1.1%
Detector Non-linearity	1.0%
Transverse	0.2%
Polarization	1.1%
Inelastic Contribution	$< 0.1\%$
Effective Q^2	0.4%
Total	2%

CREX
E=2.2 GeV, 4°
A = 2 ppm

Charge Normalization	0.1%
Beam Asymmetries	0.3%
Detector Non-linearity	0.3%
Transverse	0.1%
Polarization	0.8%
Inelastic Contribution	0.2%
Effective Q^2	0.8%
Total	1.2%

We think we can do better!

- The conservative systematics tables suggest we can reach the needed precision
  - knowledge from previous PV measurements (Qweak) indicate we could even do better
- Design of the experiments has to take into account the different scattering angles for these experiments (5° for PREX and 4° for CREX)

Spring Review

- The collaboration is preparing for an upcoming readiness review
- The important topics that will be covered are:
  - radiation shielding design
  - collimator design
  - scattering chamber design and target design
  - ^{48}Ca target oxidation
  - 1 GeV beam quality in the 12 GeV era
  - Engineering calculation needed for the septum magnet
  - impact of the new Q1s

New target chamber design

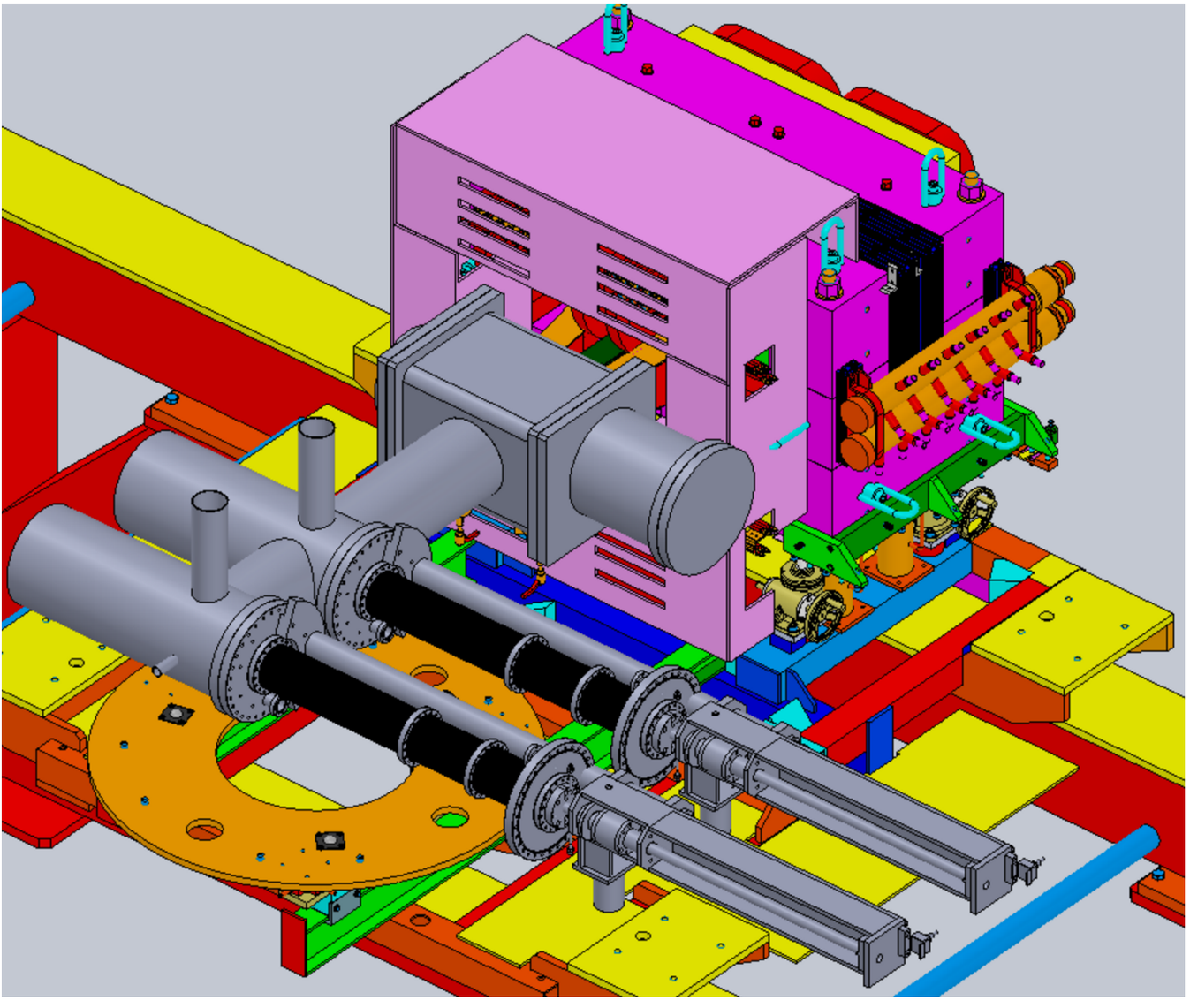

- We are working on a combined two scattering chamber design with the targets being put into the interaction region from the side
    - Solves some mechanical and vacuum problems we were facing
    - improves compatibility between PREX and CREX
    - allows for more effective shielding
- Silviu C. and Wayne S. are helping us with the design aspects
    - will iterate with them and Al Gavalya

Radiation simulations

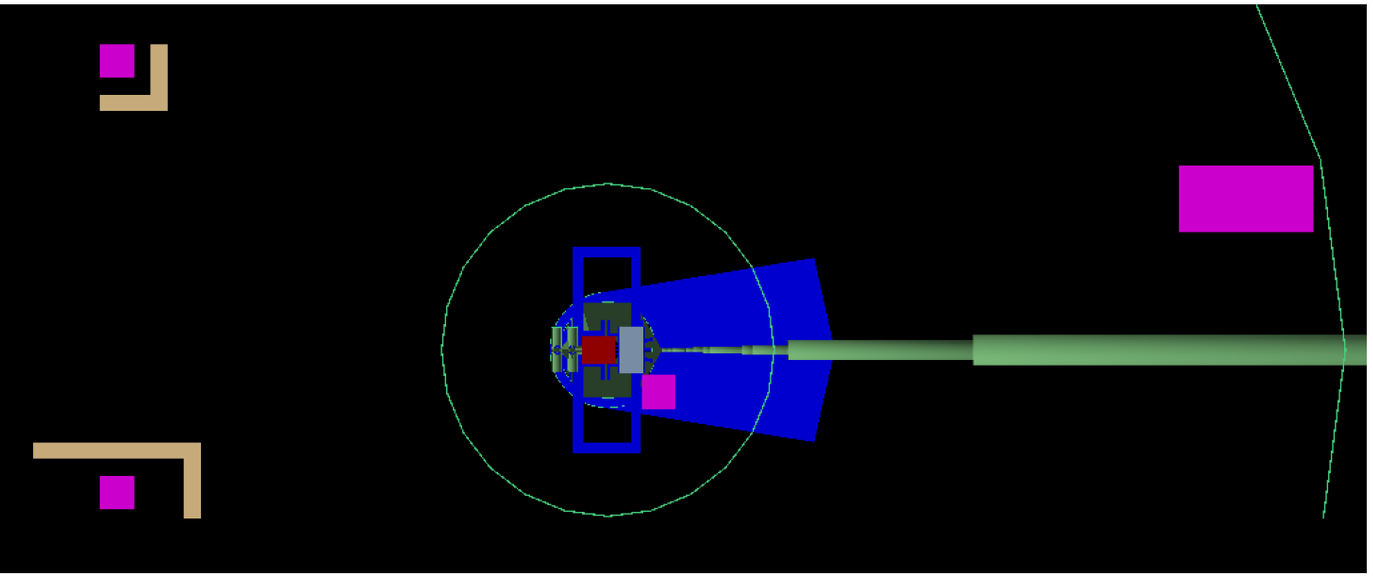

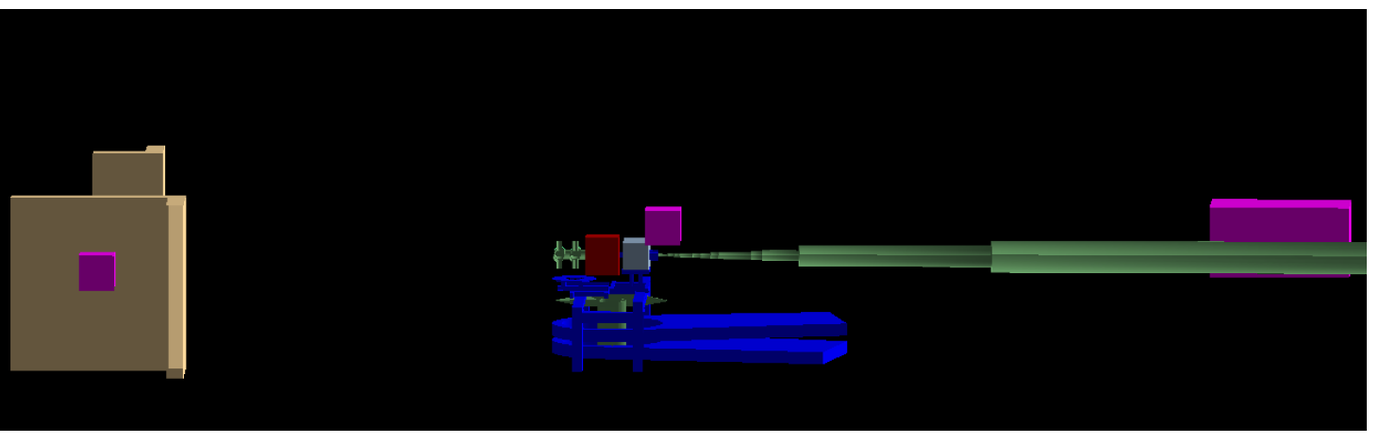

- We simulate both the Pb target and the Ca target
  - detectors were placed in the coalitions of sensitive electronics equipment
  - shielding configuration was optimized around the collimator
- Current result show a decrease by an order of magnitude in neutron flux
- We are putting our results in a format comparable to Lab requirements

Radiation simulations

- We are very careful to mitigate the possible radiation damage from the experiment on the hall equipment

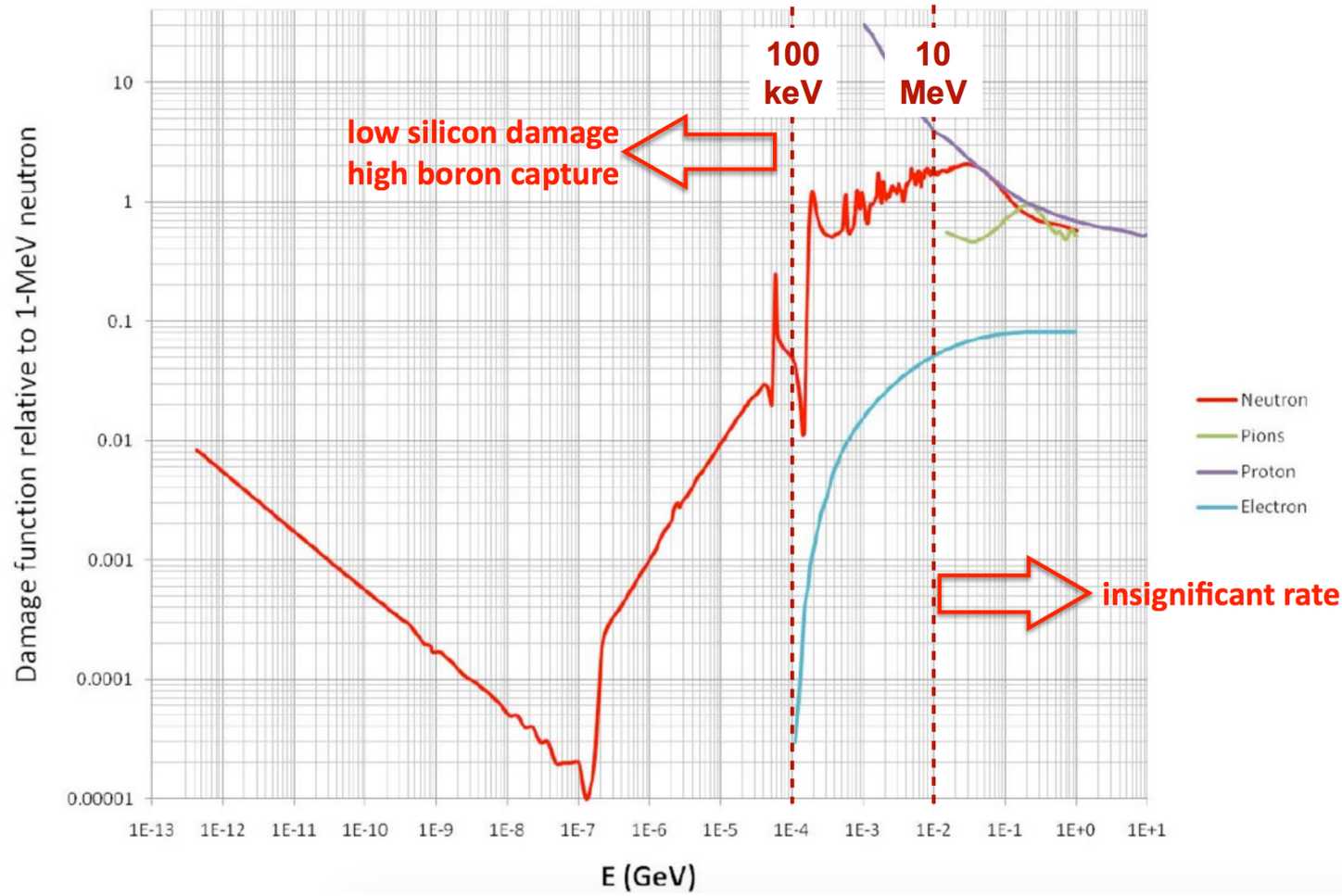

- Our current simulations provide a clear picture of the Total Ionizing Dose that will go into the electronics

- We are comparing with previous experiments with respect to Single Events effects

Target Status

- PREX:
  - during the first run we saw melting of targets with thin diamond backing
  - sandwiches of diamond and lead with 8% diamond didn't melt for 4 days at 70 uA during PREX I running
  - we will have a ladder with 10 of these targets which should be more than sufficient for our running period
    - this provides us with 25% to 90% safety margin

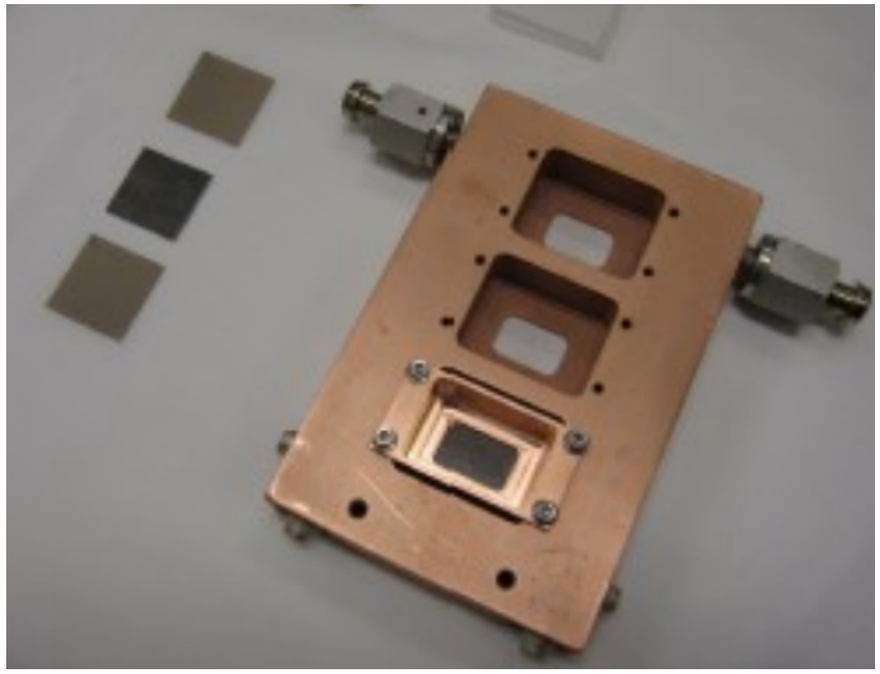

- CREX:
  - no problem with melting
  - working on ways to understand the oxidation from Ca targets
    - depending on the oxidation (and contaminations) we may be able to run without needing to remove the oxidation
  - we are still working on protection plan for the targets

Polarimetry

- Moller polarimetry (see Jim Napolitano's talk for more details)
  - Initial tests performed this fall show the new magnet is performing well
  - The new target assembly still needs to be properly commissioned
- Compton polarimetry (see Dave Gaskell's talk for more details)
  - The laser setup has been working last spring and fall
  - We saw collisions and took a small amount of data with the photon detector
  - The new electron detector still needs to be commissioned
  - The DAQ has been improved thanks to Bob M. and Greg F.

Fall 2015 beam tests

- We have done some preliminary beam tests during the machine setup this past fall
- We aim to demonstrate that we have all the tools needed to achieve the accuracy needed for the experiment
  - We are characterizing the new BCM receivers in the hall
  - We are making sure all the BPMs will be functioning properly
  - There are 3 new cavities in the hall (XYQ triplets) that we hope to have configured outputs this spring
- We will parasitically continue to do tests this spring and depending on interest on the accelerator side we may submit an ATLis for accelerator development time for the halo monitor

Summary

- These two measurements provide a great opportunity to learn about the nuclear structure and constrain and bridge the gaps between different theoretical models (DFT for ^{208}Pb and microscopic models for ^{48}Ca)
  - The systematic errors goals are achievable
- We are dotting our i's and crossing our Ts for the review
- We are reviving the DAQ and beam quality monitoring systems to be ready to take data as soon as it is possible