Rapidity Evolution of Light-Like Wilson Loops

I.O. Cherednikov[†‡], T. Mertens[†], F.F. Van der Veken[†]

[†] Universiteit Antwerpen

[‡] JINR Dubna

QCD Evolution Workshop May 14 - 17, 2012

Thomas Jefferson National Accelerator Facility Newport News, VA

OUTLINE:

- **Rapidity divergences in TMDs:** gauge independence and origin
- **Rapidity divergences in light-like Wilson loops:** explicit results for quadrilateral contours
- **Renormalization properties of the light-like Wilson loops:** how to work with light-cone singular objects?
- **Null-polygons, conformal invariance and cusps:** dynamics enters via obstructions of the Wilson loops
- **Polyakov-Makeenko-Migdal approach:** geometrical properties of the loop space, dynamics in terms of cusped Wilson loops and energy/rapidity evolution
- **Universality of the Polyakov-Makeenko-Migdal approach and further conjectures:** evolution equations and geometrical properties of the loops space

GENERIC TMD

"Trial" TMD with the light-like and transverse gauge links:

$$\Phi(x, \boldsymbol{k}_\perp) = \frac{1}{2} \int \frac{dz^- d^2 z_\perp}{2\pi (2\pi)^2} \; \mathrm{e}^{-ikz} \cdot \langle P | \bar{\psi}(z) \; [\mathrm{WL} : \mathrm{LC} \;\&\; \mathrm{T}] \psi(0) | P \rangle \; |_{z^+=0}$$

Tree-level, formally:

$$\Phi^{(0)}(x, \boldsymbol{k}_\perp) = \delta(1-x) \delta^{(2)}(\boldsymbol{k}_\perp)$$

$$\int d^2 k_\perp \Phi(x, \boldsymbol{k}_\perp) = f(x) = \text{integrated PDF}$$

One-loop corrections: $\rightarrow$ emergent (light-cone/rapidity) singularities!

CLASSIFICATION of SINGULARITIES

1. Ultraviolet poles $\sim \frac{1}{\varepsilon}$: removed by the standard renormalization procedure;

2. Overlapping divergences: contain the UV and rapidity poles simultaneously $\sim \frac{1}{\varepsilon} \ln \theta$: generalized renormalization procedure

3. Pure rapidity divergences: $\sim \ln^{1,2} \theta$: can be safely summed up by means of the Collins-Soper equation.

4. Specific self-energy divergences: stem from the gauge links, do not affect rapidity evolution; treated by modifications of the soft factors

Collins (2003, 2008, 2011 etc.); Chiu, Jain, Neill, Rothstein (2011, 2012); Avsar (2012) Idilbi, Scimemi (2011, 2012); Cherednikov, Stefanis (2008, 2009, 2010) etc.

RAPIDITY DIVERGENCES in TMDs

One-loop corrections:

Source of the rapidity divergences in the covariant and light-cone gauges

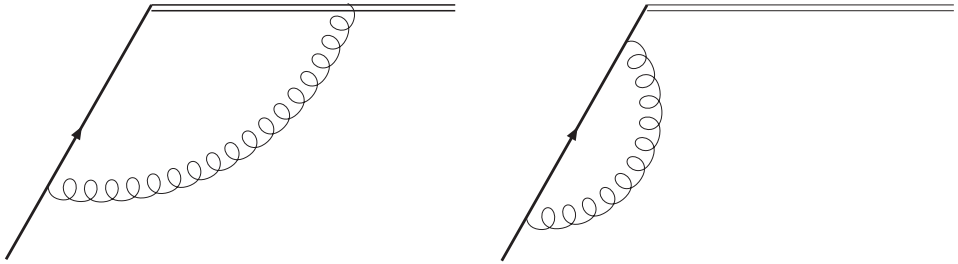

Covariant gauge

$$[\text{left panel}] = -\frac{\alpha_s}{\pi} C_{\rm F} \Gamma(\epsilon) \left[4\pi \frac{\mu^2}{-p^2} \right]^{\epsilon} \delta(1-x) \delta^{(2)}(\boldsymbol{k}_\perp) \int_0^1 dx \, \frac{x^{1-\epsilon}}{(1-x)^{1+\epsilon}}$$

Light-cone gauge

$$[\text{right panel}] = -\frac{\alpha_s}{\pi} C_{\rm F} \, \Gamma(\epsilon) \left[4\pi \frac{\mu^2}{-p^2} \right]^{\epsilon} \delta(1-x) \delta^{(2)}(\boldsymbol{k}_\perp) \int_0^1 dx \frac{(1-x)^{1-\epsilon}}{x^{\epsilon}[x]}$$

Collins (2003); Cherednikov, Stefanis (2011)

Sometimes dimensional regularization works for rapidity divergences: Stefanis (1984)

RAPIDITY DIVERGENCES in TMDs

Geometrical structure of integration contours in the unsubtracted TMDs with the light-like and off-the-light-cone longitudinal gauge links and their symbolic reduction to the collinear PDFs

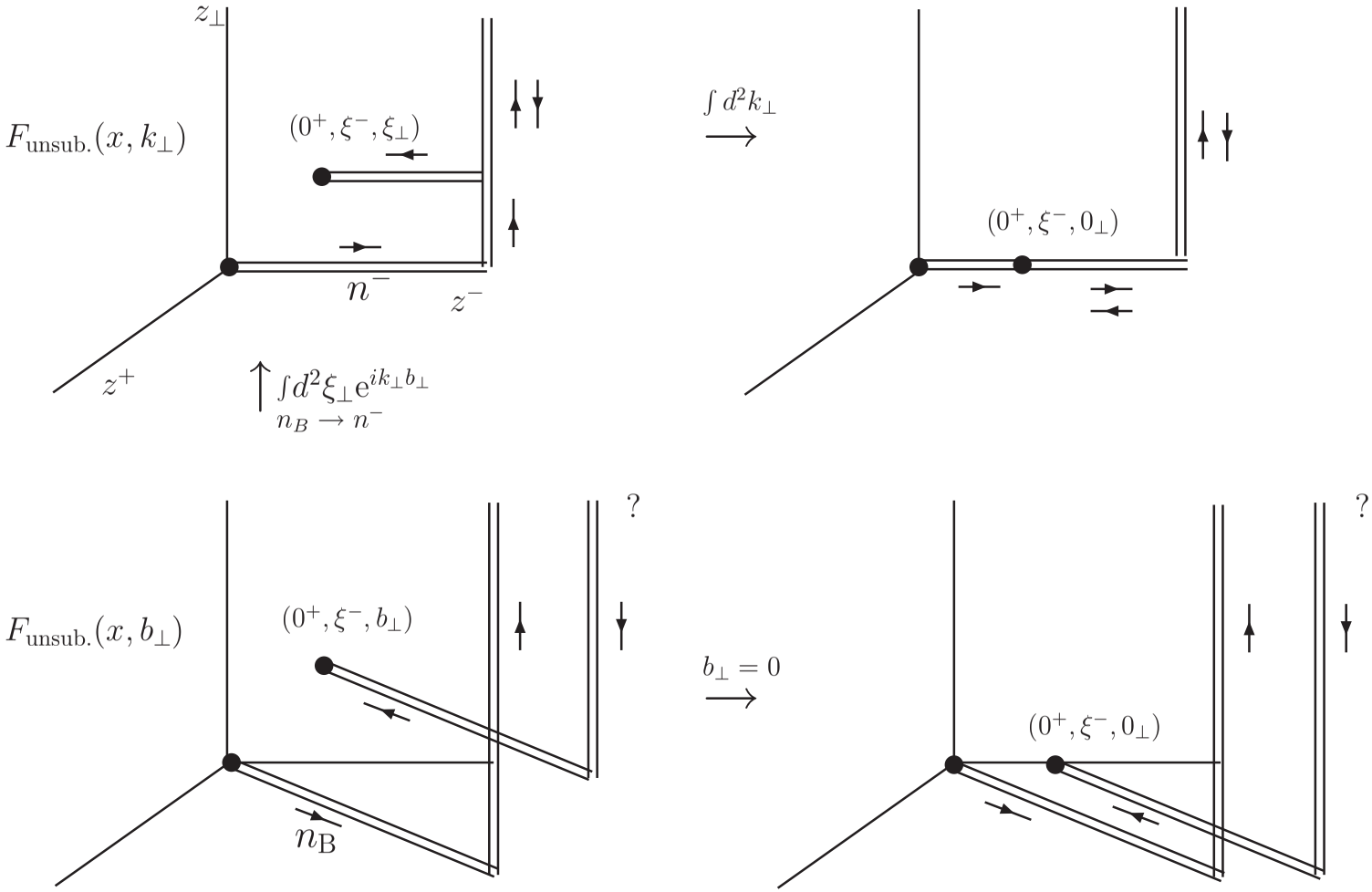

RAPIDITY DIVERGENCES in LIGHT-LIKE WILSON LOOPS
Generic light-like quadrilateral contour

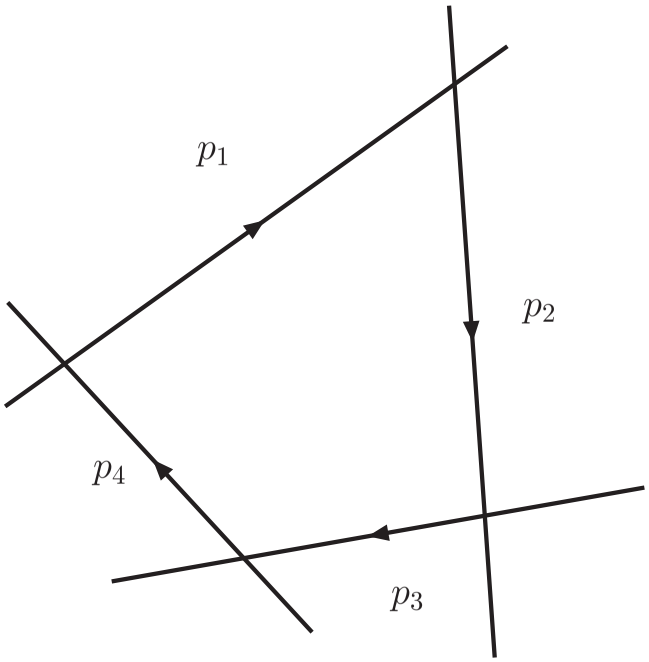

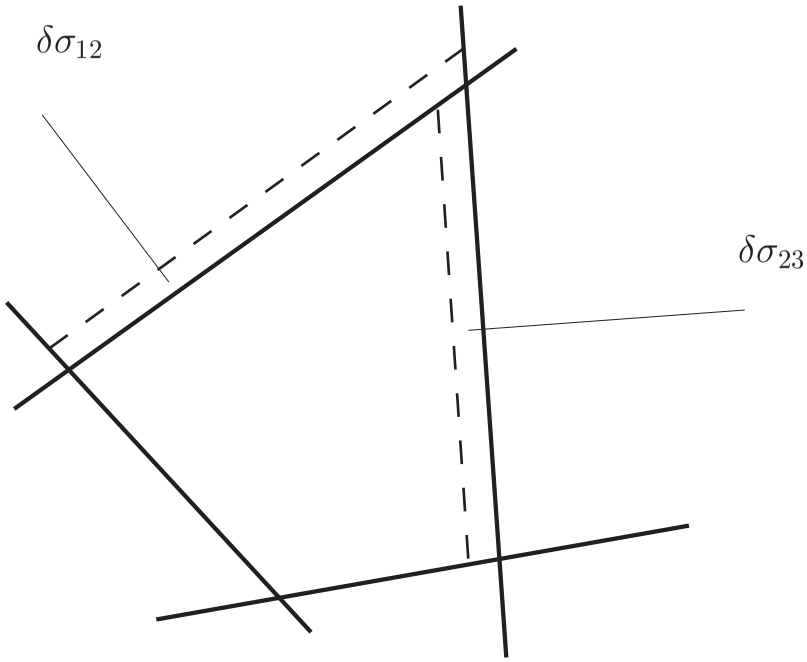

Motivation: **duality** between 4-gluon planar scattering amplitude in $\mathcal{N} = 4$ SYM and the Wilson loop made up from four light-like segments: $x_i - x_{i+1} = p_i$ are equal to the external momenta of this 4-gluon amplitude. The IR evolution of the former is dual to the UV evolution of the latter: governed by the cusp anomalous dimension.

Alday, Maldacena (2007); Makeenko (2003); Korchemsky, Drummond, Sokatchev (2008); Alday, Eden, Korchemsky, Maldacena, Sokatchev (2011); Beisert et al. (2012); Belitsky (2012) etc.

RAPIDITY DIVERGENCES in LIGHT-LIKE WILSON LOOPS

Generic light-like quadrilateral contour:

Conformal infinitesimal contour deformations, area differentials

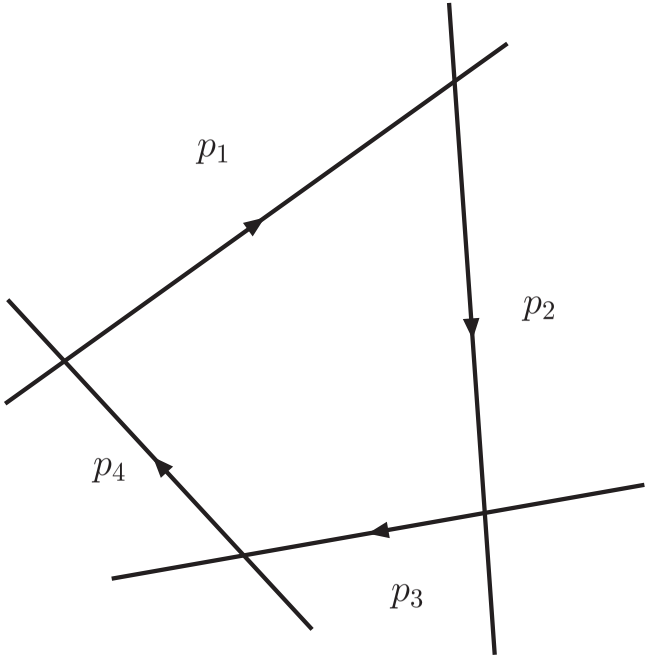

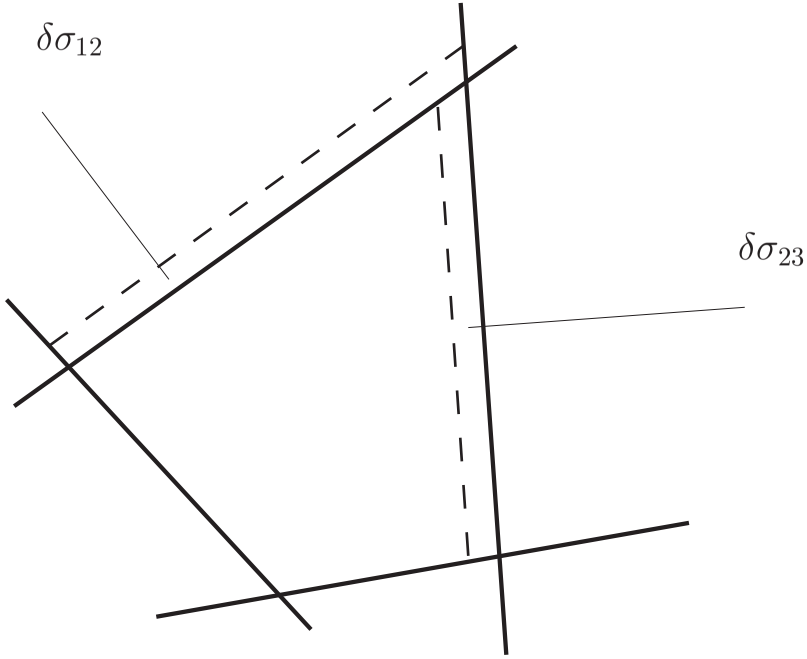

$$W_{\rm SYM}(\Gamma) = \langle 0|\mathcal{P}\ \exp\left[\oint_\Gamma d\tau\left(i\dot{z}^\mu \hat{A}_\mu(z) + \Phi_i\theta_i|\dot{z}|\right)\right]|0\rangle$$

"Area" differentials: $|\delta\sigma_{12}| = \frac{1}{2}\left(p_1\delta p_2 + p_1\delta p_4\right) \rightarrow$ however, the structure of the world-sheet is complicated.

RAPIDITY DIVERGENCES in LIGHT-LIKE WILSON LOOPS

Null-plane light-like rectangular contour:

Conformal infinitesimal contour deformations

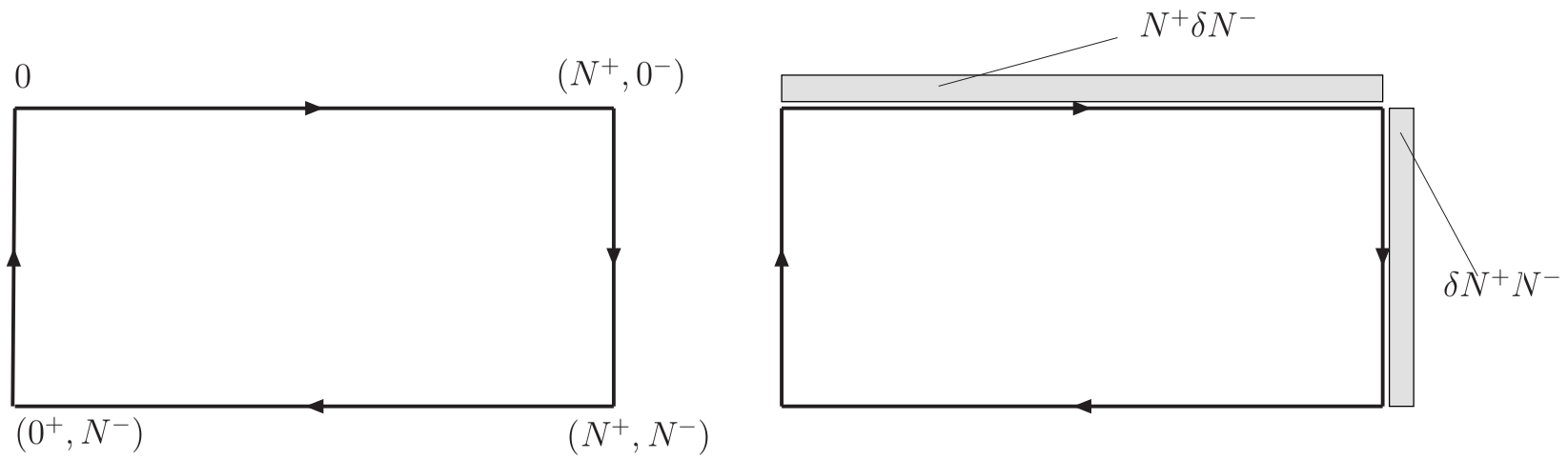

Null-plane is determined by $\boldsymbol{z}_\perp = 0$; therefore, the minimal (oriented) area is well-defined:

$$\delta\sigma^{+-} = \oint_{\delta\Gamma^\pm} z^+ dz^- = N^+ \delta N^-$$

$$\delta\sigma^{-+} = \oint_{\delta\Gamma^\mp} z^- dz^+ = N^- \delta N^+$$

RENORMALIZATION PROPERTIES of LIGHT-LIKE WILSON LOOPS

Mandelstam rapidity/energy variables

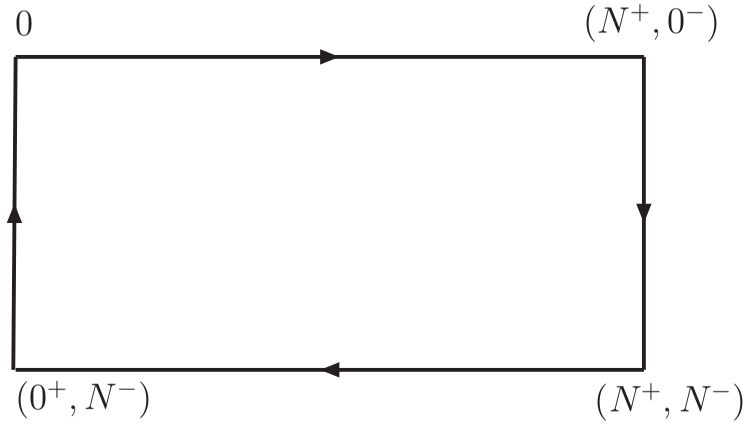

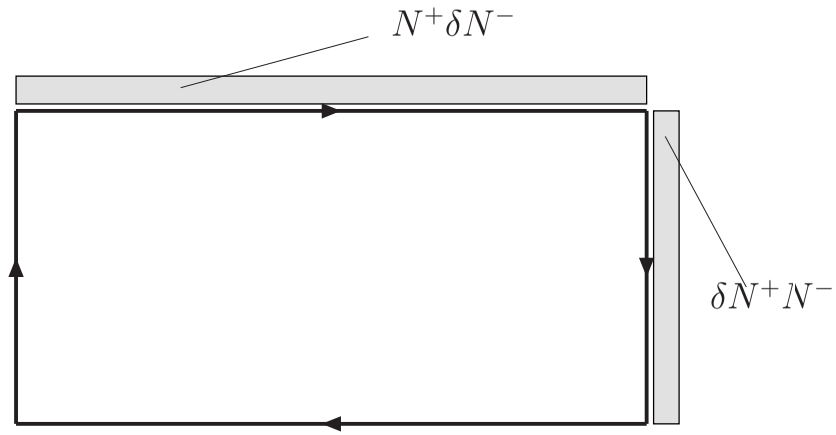

Large-N_c limit:

$$W(\Gamma) = 1 + \frac{\alpha_s N_c}{2\pi}\left\{-\frac{1}{\epsilon^2}\left(\left[\frac{-s+i0}{\mu^2}\right]^{\epsilon} + \left[\frac{-t+i0}{\mu^2}\right]^{\epsilon}\right) + \frac{1}{2}\ln^2\frac{s}{t} + 2\zeta_2 + O(\epsilon)\right\} + O(\alpha_s N_c)$$

Energy/rapidity variables: $s = (p_1 + p_2)^2$, $t = (p_2 + p_3)^2$ vs **area** variables (rectangular contour in the null-plane): $\Sigma = (p_1 \cdot p_2) = s/2 = -t/2$

Korchemskaya, Korchemsky (1992); Bassetto, Korchemskaya, Korchemsky, Nardelli (1993)

RENORMALIZATION PROPERTIES of LIGHT-LIKE WILSON LOOPS

Null-plane light-like rectangular contour:
Mandelstam rapidity/energy variables

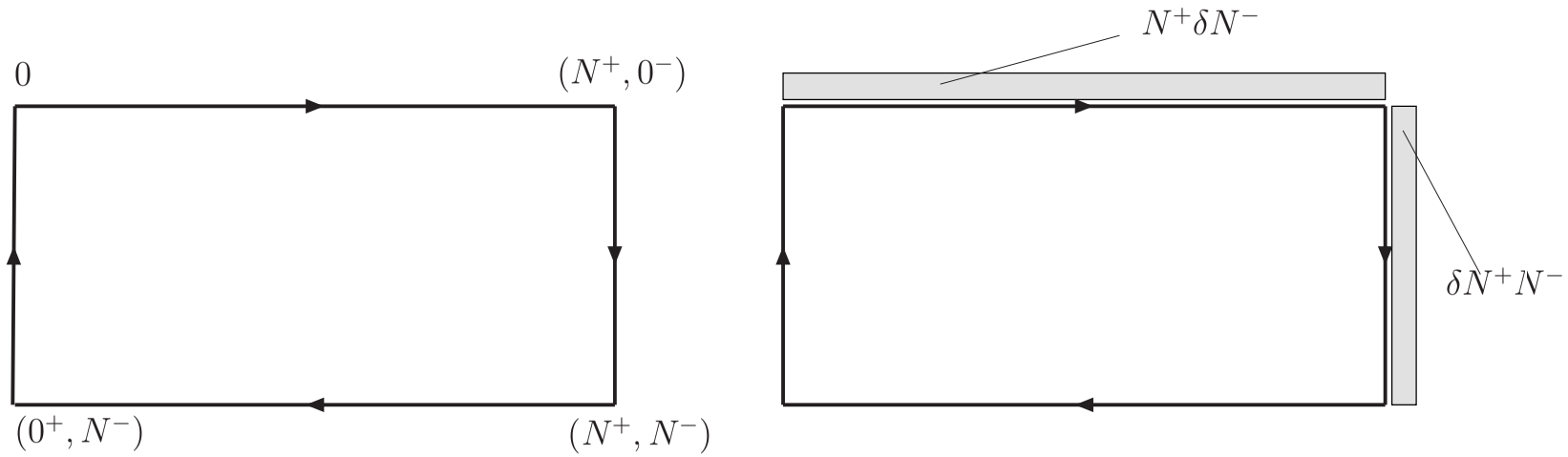

$W(\Gamma)$ is not multiplicatively renormalizable due to light-cone extra divergences—dual to the TMD case.

However, energy/area logarithmic derivative does the job ($\bar{s} = s/\mu^2$):

$$\frac{d \ln W(\Gamma)}{d \ln \bar{s}} = \frac{d \ln W(\Gamma)}{d \ln \bar{\Sigma}} = -\frac{\alpha_s N_c}{2\pi} \frac{1}{\epsilon} \left([\bar{s} + i0]^\epsilon - [-\bar{s} + i0]^\epsilon \right)$$

RENORMALIZATION PROPERTIES of LIGHT-LIKE WILSON LOOPS

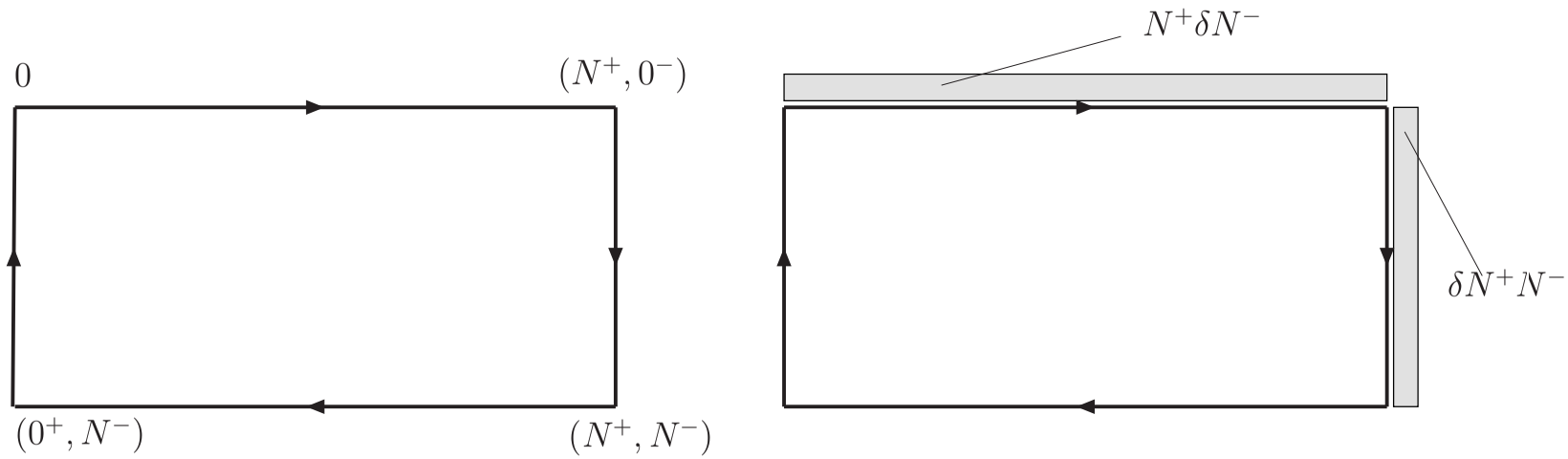

Anomalous dimension results from:

$$\mu \frac{d}{d\mu} \frac{d \ln W(\Gamma)}{d \ln \bar{s}} \sim -4\, \Gamma_{\rm cusp}\ , \ \Gamma_{\rm cusp} = \frac{\alpha_s N_c}{2\pi}$$

We get finite result by means of the area derivative: **dynamical properties** of the light-like Wilson loop are encoded in the cusp anomalous dimension: Korchemsky, Radyushkin (1987). Local quantity: behavior in vicinity of an obstruction. Path-dependence shows up in finite terms. We related the **geometry** of the loop space (area differentials) and the **dynamics** of the fundamental d.o.f., that is the light-like Wilson loops.

POLYAKOV-MAKEENKO-MIGDAL APPROACH

Wilson loops as the (fundamental) gauge-invariant degrees of freedom:

$$W_n(\Gamma_1, ...\Gamma_n) = \langle 0|\mathcal{T}\frac{1}{N_c}\Phi(\Gamma_1)\cdots\frac{1}{N_c}\Phi(\Gamma_n)|0\rangle$$

$$\Phi(\Gamma_i) = \mathcal{P}\ \exp\left[ig\int_{\Gamma_i} dz^\mu \hat{A}_\mu(z)\right]$$

The loop functionals obey the Polyakov-Makeenko-Migdal equations:

$$\partial^\nu \frac{\delta}{\delta\sigma_{\mu\nu}(x)} W_1(\Gamma) = N_c g^2 \oint_\Gamma dz^\mu\ \delta^{(4)}(x-z) W_2(\Gamma_{xz}\Gamma_{zx})$$

The equation is exact and non-perturbative, but not closed and difficult to solve in general.

Polyakov (1979); Makeenko, Migdal (1979, 1981); Kazakov, Kostov (1980); Brandt, Neri, Sato (1981); Brandt, Gocksch, Sato, Neri (1982) etc.

Problems:

- Most interesting loops are divergent and have obstructions: we are particularly interested in **cusped** loops. In that case, renormalized version of the PMM equation is not available.
- The area functional derivative is not well-defined operation for arbitrary contour. In particular, the area differentiation for cusped loops is not (at least) straightforward.
- Problems with continuous deformation of the loops in the Minkowski space: consistent definition of the derivatives obscure.
- Connection of the loop functionals to observables.
- Solution of the PMM equations in the four-dimensional Minkowskian space-time is not known.

POLYAKOV-MAKEENKO-MIGDAL APPROACH

Simplifications:

- Large-N_c limit: factorization property $W_2(C_1, C_2) \approx W_1(C_1) \cdot W_2(C_2)$
- Null-plane light-cone rectangular contours are effectively two-dimensional
- Conformal invariance for the light-like polygons: angles conserved, no angle-dependent contributions which may break PMM-equation
- In the PMM-approach, the power of divergency decreases

Therefore, the PMM approach relates cusp dynamics, renormalization properties and geometry of the loop space. The problem now is how to extract reliable information.

POLYAKOV-MAKEENKO-MIGDAL APPROACH

Non-Abelian exponentiation of the regularized (but not renormalized) Wilson loops with cusps: Gatheral (1983); Frenkel, Taylor (1984); Korchemsky, Radyushkin (1987)

$$W(\Gamma;\epsilon;g;s,t) = \exp\left[\sum_{k=1} \alpha_s^k \, C_k(W) F_k(W)\right]$$

"Maximally non-Abelian" coefficients $C_k \sim C_F \, N_c^{k-1} \to \frac{N_c^2}{2}$

Perturbative expansion of the PMM equation:

$$\frac{dW}{d\ln s} = Z \, \alpha_s \, W \quad , \quad W(\epsilon;g;s,t) = 1 + \alpha_s C_1 F_1 + \alpha_s^2 \left(C_2 F_2 + \frac{1}{2!} C_1^2 F_1^2\right) + O(\alpha_s)$$

—a closed chain of perturbative equations:

$$C_1 \frac{dF_1}{d\ln s} = Z(\epsilon;s,t)\alpha_s \, , \; C_2 \frac{dF_2}{d\ln s} = Z \, C_1 F_1 - \frac{1}{2!} C_1^2 \frac{dF_1^2}{d\ln s} \ldots$$

$Z(\epsilon;s,t)$ is universal factor related to the cusp anomalous dimension: Cherednikov, Mertens, Van der Veken (2012) (in preparation)

UNIVERSALITY of the POLYAKOV-MAKEENKO-MIGDAL APPROACH:

DISCUSSION, CONCLUSIONS and OUTLOOK

- Polyakov-Makeenko-Migdal approach provides a full and consistent description of the geometrical properties of the loop space. Fundamental degrees of freedom are closed Wilson loops and the PMM Eqs. resemble the Dyson-Schwinger Eqs. in the loop space. In general, the system of the PMM Eqs. is not closed and cannot be straightforwardly applied to calculate any useful quantity.

- However, in the large-N_c limit, in the null-plane $\boldsymbol{z}_\perp = 0$, for the rectangular light-like Wilson loops, the area functional derivative is reduced to the normal derivative for the dimensionally regularized (not renormalized!) loops and the PMM Eqs. appear to be equivalent to the energy/rapidity evolution equations.

- We can then relate the geometrical properties of the loop space and the dynamics encoded in cusps. The latter are introduced by external-driven obstructions of (initially) smooth Wilson loops. Renormalized PMM Eq. for cusped loops are closed dynamical equations for the loop functionals, they can be (in principle) formulated consistently and even solved on the light-cone.

- Conjecture: the PMM approach is universal and can be applied to construction of energy/rapidity evolution equations in many interesting situations. Specific properties of the Wilson loops are determined by the contours with cusps (and/or self-intersections).