Frequency-Swept Nuclear Magnetic Resonance Program for HDice

Tyler Lemon, Mary Ann Antonioli, Peter Bonneau, Aaron Brown, Pablo Campero, Brian Eng, George Jacobs, Mindy Leffel, Tyler Lemon, Marc McMullen, and Amrit Yegneswaran
Physics Division, Thomas Jefferson National Accelerator Facility, Newport News, VA 23606
April 24, 2020

HDice plans to run tests in the Upgraded Injector Test Facility (UITF). Required for measuring the target's polarization is a version of the Nuclear Magnetic Resonance (NMR) program that sweeps the NMR reference signal's frequency from 50 kHz to 4 MHz (rather than magnetic field, which remains at ~1.3 T). This note details the features of this frequency-swept NMR (fsNMR) program.

To measure the polarization of the target in the past, a LabVIEW-based NMR program [1] was used that varies the magnetic field around the target at a fixed NMR reference frequency. Since changing the magnetic field during the tests in the UITF would cause the target to lose its polarization, the fsNMR program is being developed. This program varies the frequency of the NMR reference signal while keeping magnetic field constant at ~1.3 T. The fsNMR program will be built around the existing Fast Resonance Scanner (FRS) program that was previously used to scan NMR reference signal frequencies, determining the optimal frequency settings for the NMR program.

Figure 1 is a system diagram for the instrumentation setup for the fsNMR program. The program is run on a PC that interfaces with a signal generator and lock-in amplifier using GPIB and with a RF Switching and Attenuation Unit [2] using RS-485. The RF signal is provided by the signal generator to the RF Switching and Attenuation Unit where it is attenuated by –63 dB and then directed to the RF coil. A separate RF pickup coil detects the NMR response from the target caused by the RF signal. The amplitude of the detected signal by the pickup coil is very small, on the order of microvolts, so a lock-in amplifier is used to measure it's amplitude R, phase θ, and X , Y components using the RF Attenuation and Switching Unit's output as a reference.

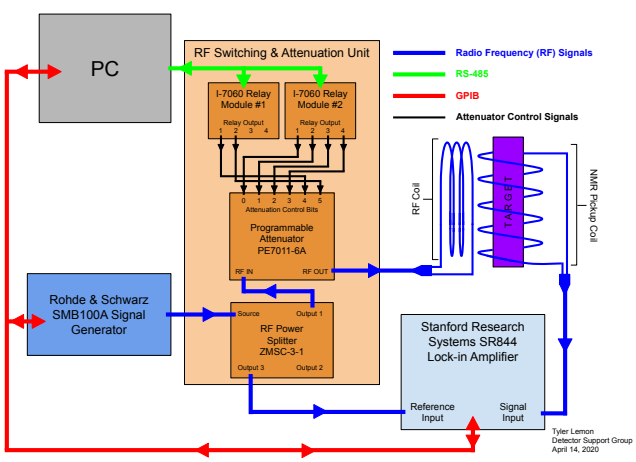

FIG. 1. System diagram of instrumentation used in fsNMR program.

Development of the fsNMR program will be broken up into two sequential stages. The end result of each stage will be a usable program with new features. Stage 1 will add the ability to run multiple cycles of measurements to the FRS program. The expected number of cycles that will be run is ~50, but the user can change the number of cycles using a front panel control. For each run, the preceding cycles' data will be averaged and plotted on the same plot as the live data acquisition, Fig. 2.

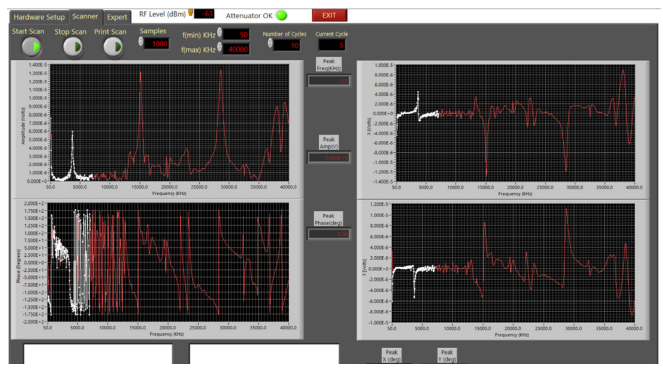

FIG. 2. fsNMR program screenshot during development of Stage 1. The front panel displays lock-in amplifier readback for R (top left), θ (bottom left), X (top right), and Y (bottom right). On each plot, the data for the current scan is displayed in white and the average of previous scans is displayed in red. For the run displayed in screenshot, program is on the fifth of ten cycles.

The ability to log the lock-in amplifier's X and Y measurements will be added to the program, facilitating comparison to data collected by the new Zurich lock-in amplifier, which is presently under first-article testing. At the end of the set number of cycles, the program will log all collected data (lock-in-amplifier-measured X, Y, R, θ , and the frequency at which each data point is acquired) and their calculated averages.

At the end of stage 1 development, the resulting program is an fsNMR program that is comparable to the existing NMR program. Both programs have the capability to run multiple sweeps, to display the averaged result in the background of the live data plot, and log the averaged data and each individual cycle's data in text files. The resulting fsNMR data can then be used for offline analysis and study.

Stage 2 of the fsNMR program will add online analysis and processing capabilities. The main goal of stage 2 is to implement readback of a previous run's averaged data as a background measurement. All new data will have this background data subtracted and then be compared to the background data.

Advantages of the stage 2 fsNMR program are that the background subtraction would lower the effects of any intrinsic noise of the instrumentation, or noise detected by the instrumentation in the UITF area. During a frequency sweep, the typical background noise is on the order of 1 μV with the resonant NMR peaks on the order 100 μV. Because the signal expected by the lock-in amplifier is so small, it is important to lower or eliminate the effects of any intrinsic noise. The multiple cycles and averaging would lessen the chance that any anomalous readings caused by the noise affects the resulting data.

In addition to the development of stage 1 and stage 2 of the program, other tasks include investigating sources of the long timing delays that occur due to auto-adjusting of the gain of the lock-in amplifier, optimizing instrumentation communication, organizing and refactoring block diagrams, and resolving file structure dependency conflicts. These tasks optimize the program and make it more efficient to run, saving time during tests.

The final version of the fsNMR program will be able to acquire and analyze data at a faster rate leading to more efficient polarization measurements during UITF tests. Previously, it took ~10 minutes for a full scan where with current timing optimization, the time has been reduced to ~6 minutes.

In summary, a new frequency-swept NMR program is under development for HDice tests in the UITF. This new program will be developed in two stages, with stage 1 implementing averaging and additional lock-in amplifier readback, and stage 2 featuring background subtraction and normalization to that background signal. The final version of the fsNMR program will also be optimized to be efficient.

[1] A. Hoebel, et al., *Nuclear Magnetic Resonance Program for HDice Targets*, DSG Note 2017-02, 2017.

[2] M. A. Antonioli, et al., *HDice RF Attenuation and Switching Unit Fabrication and Upgrades*, DSG Note 2018-10, 2018.