DSG NPS Status Update

Aaron Brown and the
Detector Support Group
December 1, 2022

Contents

Thermal Readback

- Thermal readback Phoebus screen testing in progress
  - Screens uploaded to *cdaql3*
  - Number of issues converging to zero

By:	Pablo Campero						
Date:	11/29/2022						
Project:	**NPS CSS-Phoebus Screen Test**						
		Test I		**Test II**		**Test III**	
#	**Screen Name**	**Status**	**Comments**	**Status**	**Comments**	**Status**	**Comments**
1	Front Crystal Zone Temperature Sensors Monitoring	Completed	No Interlock Status or Latch Status indicator works	Completed	• Average values do not show expected values when the set # of points to average =1 • Out of limit indicators do not change to red when readback is below low limit	Completed	Average value does not change when # of points to average is > 1; average value = sensor value
2	Front Crystal Zone Temperature Sensors Controls	Completed	Sensor Enable buttons do not work; remain in off position	Completed		Completed	
3	Back Crystal Zone Temperature Sensors Monitoring	Completed	No Interlock Status or Latch Status indicator works	Completed	• Average values do not show expected values when the set # of points to average =1 • Out of limit indicators do not change to red when readback is below low limit	Completed	Average value does not change when # of points to average is > 1; average value = sensor value
4	Back Crystal Zone Temperature Sensors Controls	Completed	• Sensor Enable buttons do not work; remain in off position • Trip delay PV disconnected	Completed		Completed	

Low Voltage Controls & Monitoring

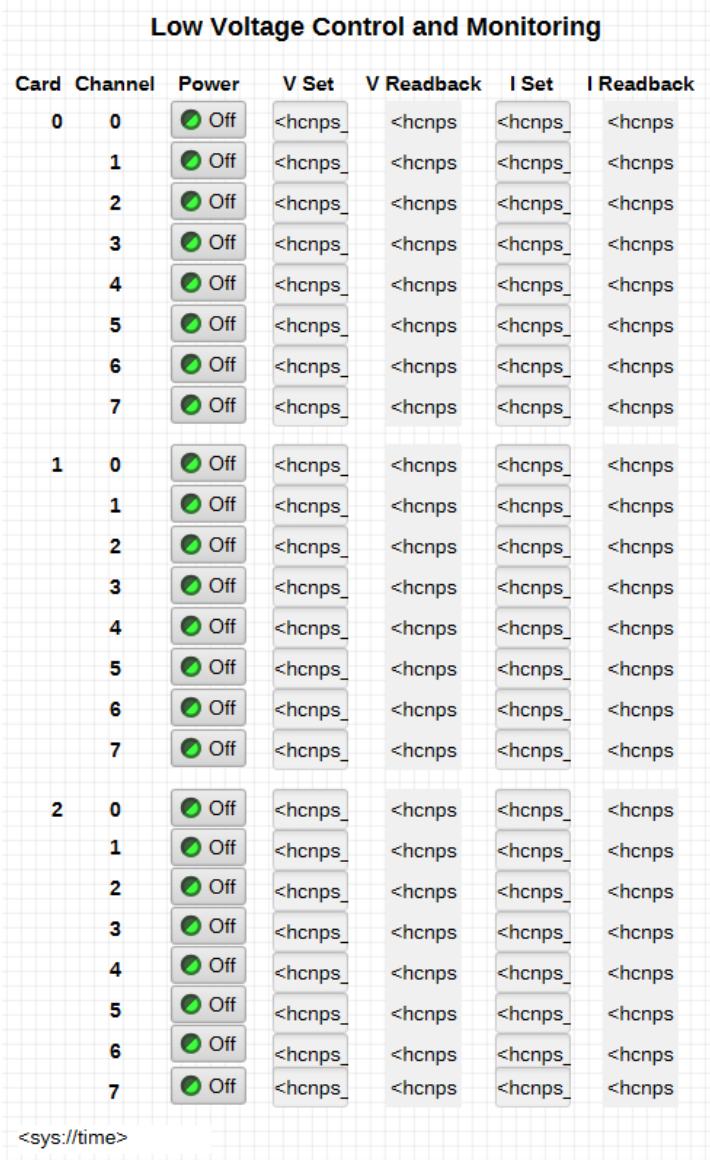

Low Voltage Control and Monitoring

Card	Channel	Power	V Set	V Readback	I Set	I Readback
0	0	Off	<hcnps_	<hcnps	<hcnps_	<hcnps
	1	Off	<hcnps_	<hcnps	<hcnps_	<hcnps
	2	Off	<hcnps_	<hcnps	<hcnps_	<hcnps
	3	Off	<hcnps_	<hcnps	<hcnps_	<hcnps
	4	Off	<hcnps_	<hcnps	<hcnps_	<hcnps
	5	Off	<hcnps_	<hcnps	<hcnps_	<hcnps
	6	Off	<hcnps_	<hcnps	<hcnps_	<hcnps
	7	Off	<hcnps_	<hcnps	<hcnps_	<hcnps
1	0	Off	<hcnps_	<hcnps	<hcnps_	<hcnps
	1	Off	<hcnps_	<hcnps	<hcnps_	<hcnps
	2	Off	<hcnps_	<hcnps	<hcnps_	<hcnps
	3	Off	<hcnps_	<hcnps	<hcnps_	<hcnps
	4	Off	<hcnps_	<hcnps	<hcnps_	<hcnps
	5	Off	<hcnps_	<hcnps	<hcnps_	<hcnps
	6	Off	<hcnps_	<hcnps	<hcnps_	<hcnps
	7	Off	<hcnps_	<hcnps	<hcnps_	<hcnps
2	0	Off	<hcnps_	<hcnps	<hcnps_	<hcnps
	1	Off	<hcnps_	<hcnps	<hcnps_	<hcnps
	2	Off	<hcnps_	<hcnps	<hcnps_	<hcnps
	3	Off	<hcnps_	<hcnps	<hcnps_	<hcnps
	4	Off	<hcnps_	<hcnps	<hcnps_	<hcnps
	5	Off	<hcnps_	<hcnps	<hcnps_	<hcnps
	6	Off	<hcnps_	<hcnps	<hcnps_	<hcnps
	7	Off	<hcnps_	<hcnps	<hcnps_	<hcnps

<sys://time>

- Tested IOC and received data from MPOD
- Currently, development version of IOC on cdaql3
  - IOC set up to only readback voltage and current – full control and monitoring will be made available for production version
  - Any production version files should be put in a directory in the EPICS base path

Keysight D-sub Extension Cables

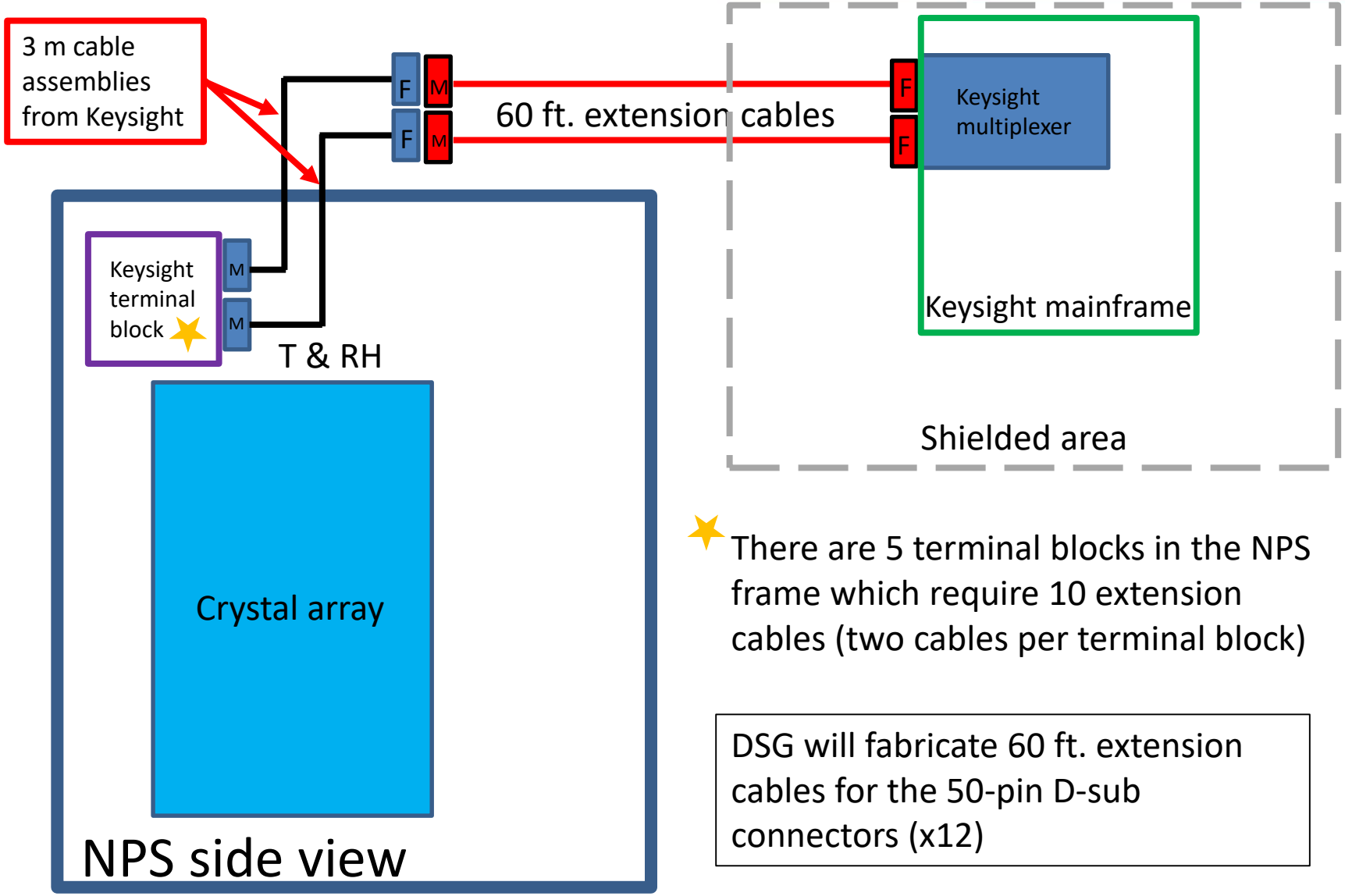

There are 5 terminal blocks in the NPS frame which require 10 extension cables (two cables per terminal block)

DSG will fabricate 60 ft. extension cables for the 50-pin D-sub connectors (x12)

Conclusion

- Thermal readback Phoebus screens debugging in progress
- EPICS IOC for low voltage controls and monitoring has been developed and tested
  - Phoebus GUI has been developed

THANK YOU!