Hall A SoLID Magnet PLC Control System

Pablo Campero
Detector Support Group
6/10/2020

Contents

PLC Controls Overview

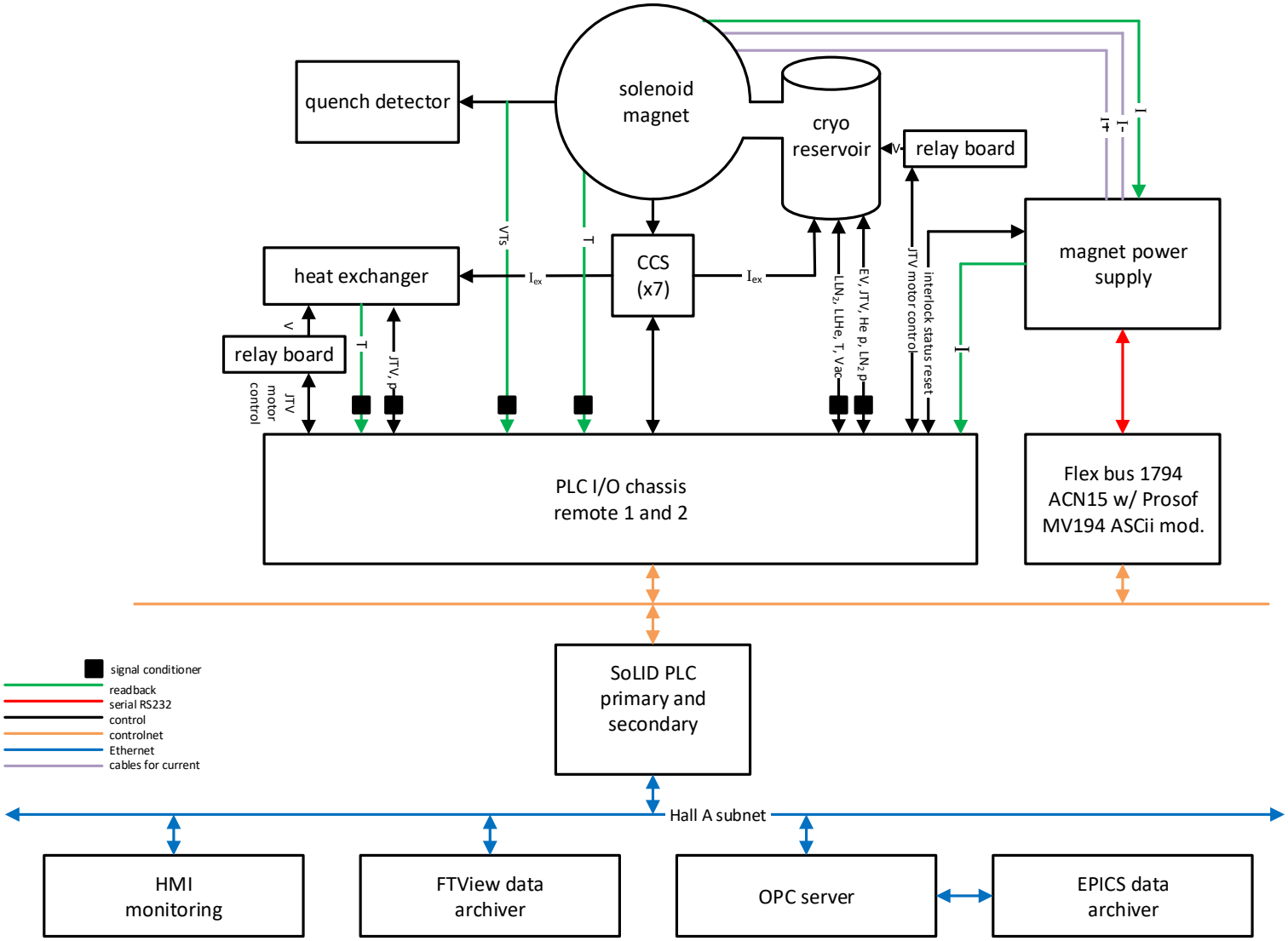

Solenoid Control System, M. A. Antonioli, 6/9/2020

PLC Specifications

- Selected an Allen Bradley **ControlLogix 1756-L72** controller, with the following specifications:
  - User memory: 4 MB
  - I/O memory: 0.98 MB
  - Optional non-volatile memory : 1 GB
  - Chassis: 1756-A6
  - Communication option: EtherNet/IP and ControlNet
  - Controller redundancy: full support

Note: Currently SoLID PLC system is using a 1756-L62 Hall C spare controller

Allen Bradley ControlLogix
1756-L72 controller

PLC Specifications Cont'd

- Redundancy system allows switchover between primary and secondary PLC chassis, if primary chassis has one of these conditions:
  - Loss of power
  - Major fault on controller
  - Removal or insertion of any module
  - Failure of any module
  - Damage to a ControlNet cable
  - Loss of EtherNet/IP connection
  - Program-prompted command to switch over
  - Command that is issued via Redundancy Module Configuration Tool
- After switchover occurs, new primary controller continues to execute programs, which begins with highest-priority task that had been executing on previous primary controller

PLC System Layout

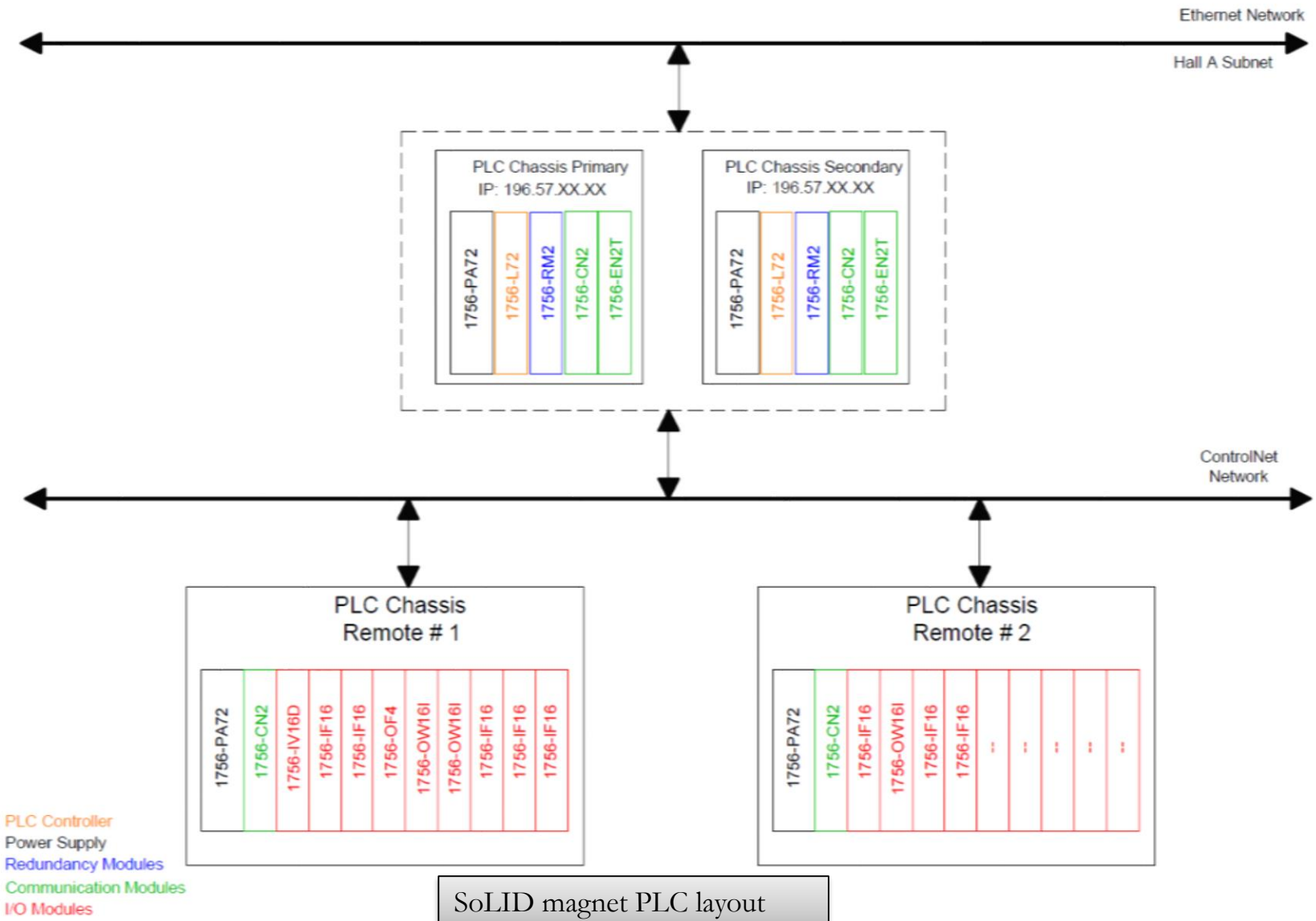

SoLID magnet PLC layout

PLC System Layout

- Two PLC chassis with identical controllers and communication modules
  - **Primary and Secondary:** PLC controller, Ethernet, ControlNet, redundancy modules
- Two Remote I/O PLC chassis
  - **Remote #1:** Digital input (x1), analog input (x5), analog output (x1), relay (x2), and ControlNet (x1) modules.
  - **Remote #2:** Analog input (x3), relay (x1), and ControlNet (x1) modules

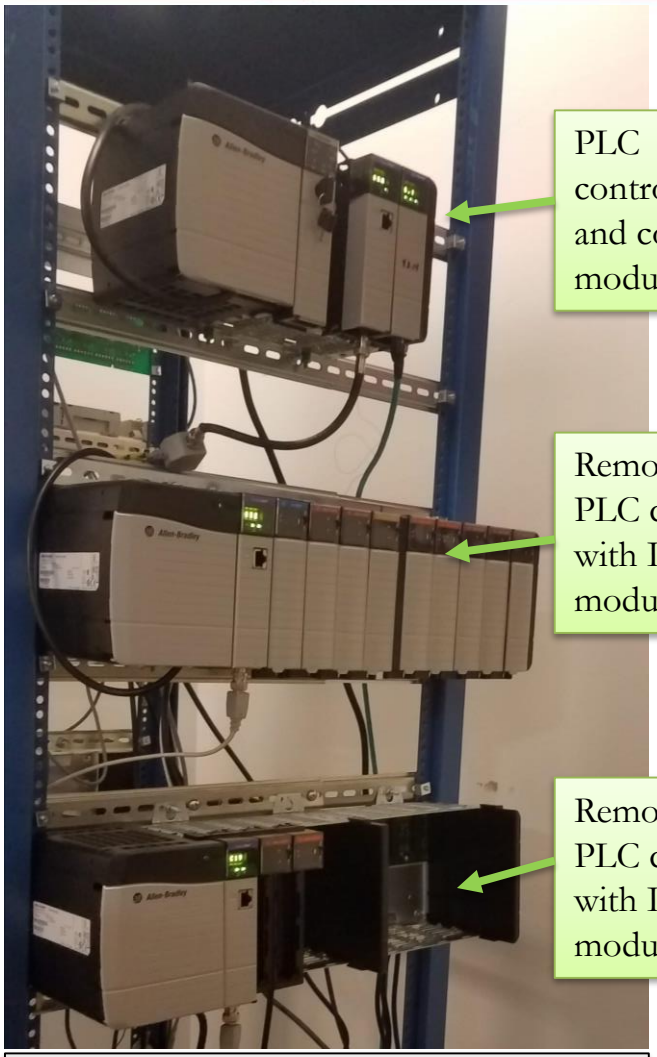

Current setup of SoLID PLC chassis located in TED 1544

PLC Controls Program Overview

- Hall A SoLID PLC will be based on Hall C's HMS main program with eight PLC routines to perform (CLEO routine has 57 sub-routines/sheets) :
  - Sensor controls and readout
  - Instrumentation control and monitoring
  - Monitoring of axial and radial supports
  - Power supply control and monitoring
  - Cooldown operations and interlocks
  - Magnet power up/down operations and interlocks

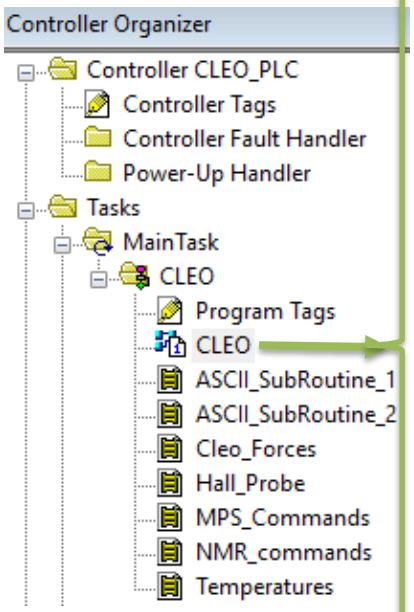

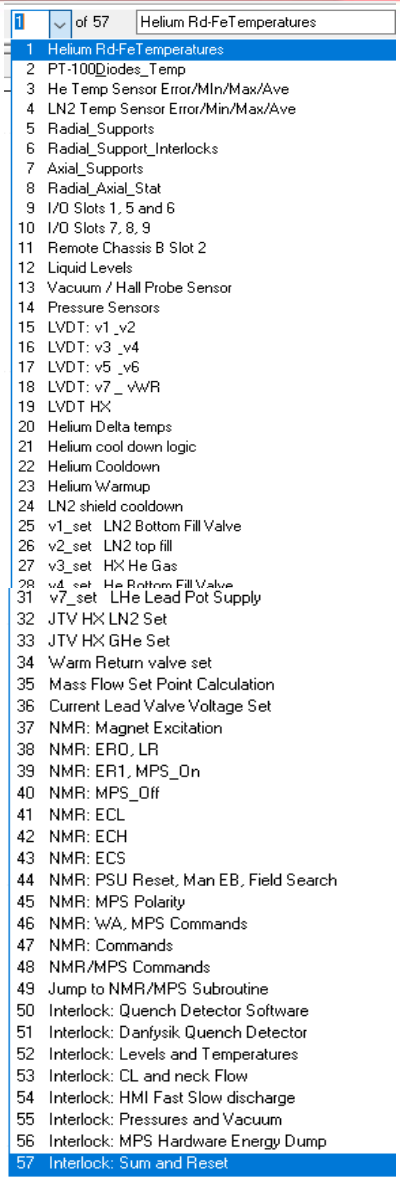

Current setup of SoLID PLC program, based on Hall C HMS

PLC Controls Program Status

- Modification for PLC chassis remote #1 – **Completed**
  - IF16 PLC module was changed from its single mode to differential mode
  - New channel assignment for I/O modules
- Addition of PLC chassis remote #2 – **Completed**
  - Added three 1756-IF16 analog input modules to readout temperature sensors, LVDTs, and heat exchanger instrumentation
  - Added 1756-16OWI relay module to control JT valves' motor boards
  - Configured I/O modules based on latest PLC layout– **Completed**
    - Added additional modules to PLC program to inhibit faults so PLC programming modification continued

PLC Controls Program Status

- **PLC code completed for:**
  - Read 32 temperature sensors in magnet radiation shield, coils and neck
    - Calculate max, min, average for temperature values
    - Error/faults handler
    - Read out eight temperature sensors located in Cryo Control Reservoir (CCR)
  - Read 16 radial (strain gauges) and four axial (load cells) supports
    - Calculate max, min, average for load cells and strain gauges
    - Error/faults handler
  - Control and monitor LN_2 and He pressure sensors
  - Control Constant Current Source (CCS) boards enabling/disabling
    - CCS boards are used to provide excitation current for all temperature sensors

Programming Status – Cont'd

- **PLC code completed for:**
  - Read eight LVDTs to determine position of JT valves located in CCR
    - Errors/fault handler
  - Vacuum gauge readout, controls, and interlock logic
    - Faults and levels based on Hall C HMS
  - Read hall probe
  - Control and monitor heat exchanger instrumentation
    - Temperature sensors readout
    - LVDT readout and error handler for LN_2 and GHe mix JT valves

PLC Programming Status – Cont'd

- **PLC code in progress**
  - Controls and monitoring of liquid levels in CCR
    - Liquid level probes and monitors have not been defined
    - Suggested liquid level monitors LM-510, which has dual sensor
  - Communications with magnet power supply
    - PSU needs to be defined and based on specs, program could change
  - Heat exchanger JT valves PID controls
    - Need to define operation conditions to control valve opening/closing
    - Confirm temperature sensors to calculate temperature differential
    - Radial strain gauges and radial load cell look-up table implementation
    - Need to check specs provided

PLC Tasks Tracking

DSG spreadsheet allows tracking of PLC programming progress

DSG Preliminary Tasks List - SoLID Solenoid I& C							
Task #	Description	Able to Proceed?	Start	Finish	Assigned Person	Status	Comments
1. PLC programming based On SHMS/HMS							
1.1	Instrumentation readout (LL, PT,MFC)	Yes	04/14/20		Pablo	In Progress	Readout for liquid levels for N_2 and He completed Readout for pressure sensors completed
1.2	Sensors readout (temp, Load cells, Strain, hall sensors)	Yes	02/10/20	05/20/20	Pablo	Completed	Completed PLC routine to control and monitor temperature sensors in the magnet radiation screens, coil shell, neck and CCR. Completed supports readout. Need to enter look up tables
1.3	Vacuum gauge readouts, controls and interlocks logic	Yes	04/10/20	04/13/20	Brian	Completed	Fault levels same as SHMS/HMS
1.4	Heat Exchanger instrumentation control	Yes	01/15/20		Aaron/Pablo	In Progress	Completed PLC routine to control and monitor temperature sensors
1.5	JT Valves- LVDT monitoring and controls		04/10/20		Pablo	In Progress	Completed readout for JTV 1 to JTV7, and valve WR
1.6	Cryo - Cooldown Operations logic				Pablo	In Progress	
1.7	NMR unit - PLC communication		04/24/20		Brian	In Progress	Code from SHMS Q1 Hall Probe, will need to update with actual sensor calibration later
1.8	MPS - PLC communications - ASCII (Research another reliable comm method e.g. Ethernet)				Brian	Not Started	MPS has not been defined yet
1.9	Magnetic field readout and regulation				Pablo	Not Started	Not required
1.1	MPS control and monitoring - Power Up/Down				Brian	Not Started	
1.11	Cooldown Interlocks				Pablo	Not Started	
1.12	Power/MPS Interlocks - Fast/controlled ramp downs				Pablo	Not Started	
1.13	High speed voltage tap readout logic to archive		12/15/19		Pablo	In progress	Developing PLC routine to read high speed ADC modules up to 3.3 Khz
1.14	PLC communication test				Pablo	Not Started	
1.15	Sensors and Instrumentation readout/calibration test	Yes			Brian/Pablo	Not Started	
1.16	MPS-PLC Communications Test				Brian	Not Started	
1.17	Test, configure, tune PLC and I/O modules on Solenoid		12/05/19		Pablo	In progress	Testing high speed ADC input modules

Conclusions

- DSG Staff: Pablo (lead), Mary Ann, Aaron, Brian, Marc, and Tyler are developing the PLC controls system for the SoLID magnet to provide precise and safe controls
  - Cooldown operations
  - Energization: power up/down operations
  - Steady state operation