Optimization of the RICH Cooling System

Presented by Tyler Lemon
Detector Support Group
Jefferson Lab, USA

Sandro Tomassini, Dario Orecchini
INFN, Italy

October 30, 2019

Contents

- Overview
- Status
- Optimization
- Tasks
  - Near future
  - Long term
- Conclusion

Cooling Settings in Previous Run

- FPGA Temperatures
  - Average 57 ± 11 °C
  - Max 68 °C (Tile 128)
  - Min 46 °C
- Compressor
  - Low threshold 104 psi
  - High threshold 113 psi
  - Duty cycle ~95%
- Airflow
  - Total 900 slm
    - ✓ Airflow 1 500 slm
    - ✓ Airflow 2 400 slm

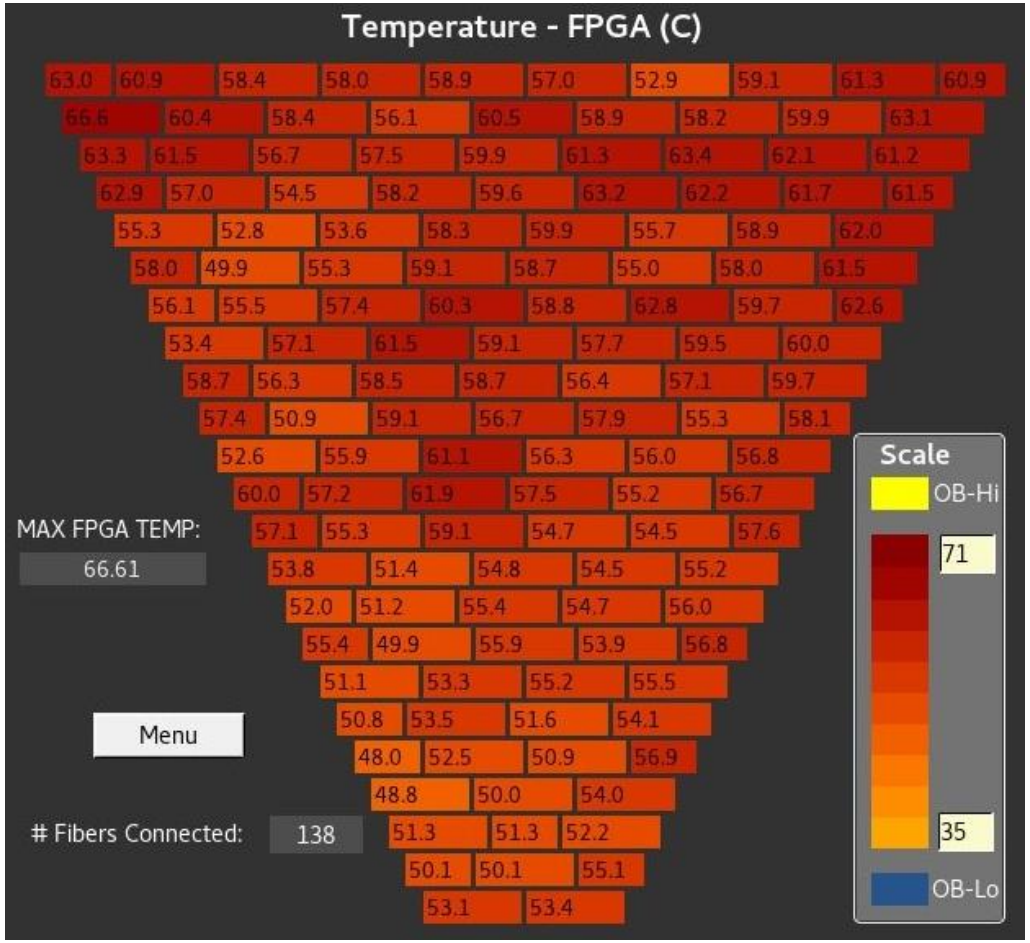

CSS screen for RICH FPGA temperature monitoring as taken with settings from previous run.

Cooling System

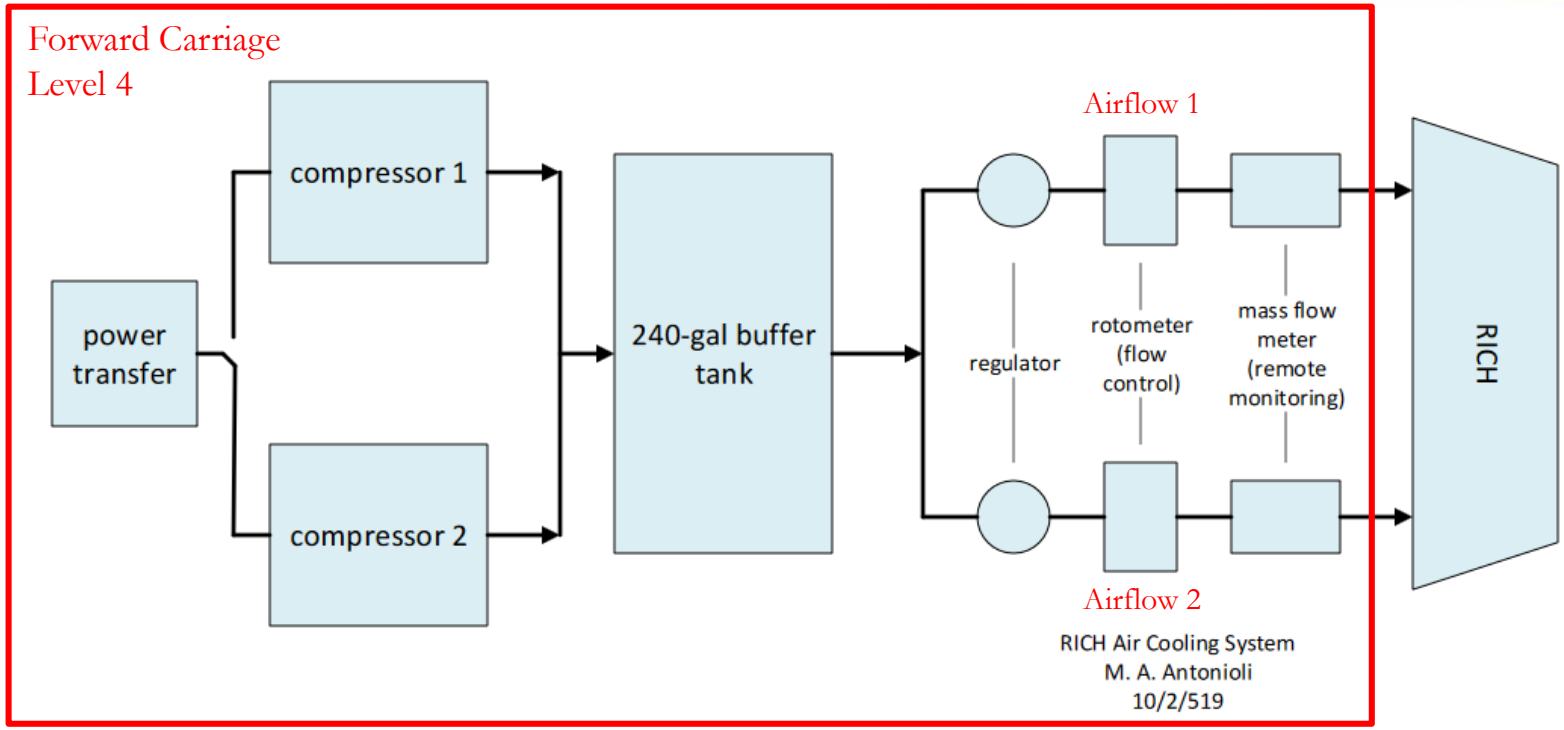

- An Atlas Copco SF 11+ FF compressor pumps air to buffer tank.
- Regulators and rotameters control airflow to RICH electronic panel (EP)
- Two compressors on-hand but power limitations allow only one to be operational at a time.

Optimization

- Goals
  - Lower duty-cycle for compressor
    - ✓ Manufacturer specification: 50% duty cycle
  - Reduce power-cycling of compressor units
  - Keep FPGA temperatures under 75 °C
- Optimization tests performed in two stages
  - Adjust compressor low-high threshold with 900 slm airflow to RICH.
    - ✓ Compressor units turn off when pressure ≥ pressure high threshold.
    - ✓ Compressor units turn on when pressure ≤ pressure low threshold.
  - With new thresholds, lower flow to RICH

Optimization Results

- Compressor low – high threshold adjusted
  - (104 psi – 113 psi) → (80 psi – 100 psi)
- Airflow (AF 1+AF 2) reduced
  - 900 slm (500 + 400) → 720 slm (450 + 270)
- Results
  - Compressor duty cycle ~50%
  - Max FPGA temperature ~73 °C

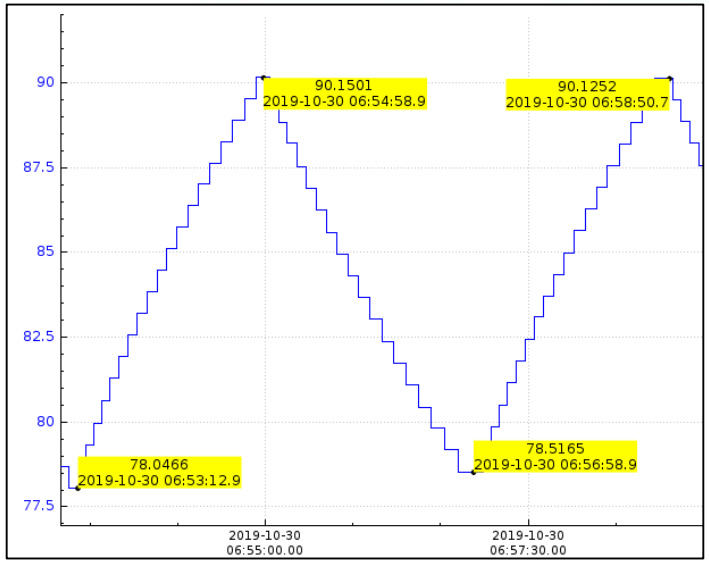

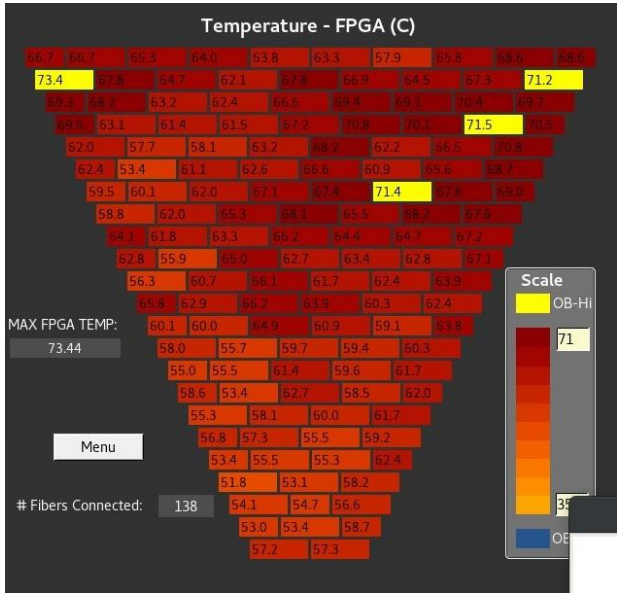

Top: buffer tank pressure (directly related to compressor output pressure) with optimized on-off range and airflow.

Bottom Left: RICH FGPA temperature map with 720 slm (450 + 270) airflow.

Other Possible Improvements

- Relocate buffer tank to cooler area of Hall B
  - Installed sensors to measure temperature gradient
    - ✓ Sensors on each level of forward carriage
- Insulate tank to lessen effects of ambient temperature
- Use chilled water to keep tank temperature ~18 °C
  - Cooler air in buffer tank improves heat removal capability of system
  - At ~18 °C (~65 °F) reduced risk of problems due to condensation

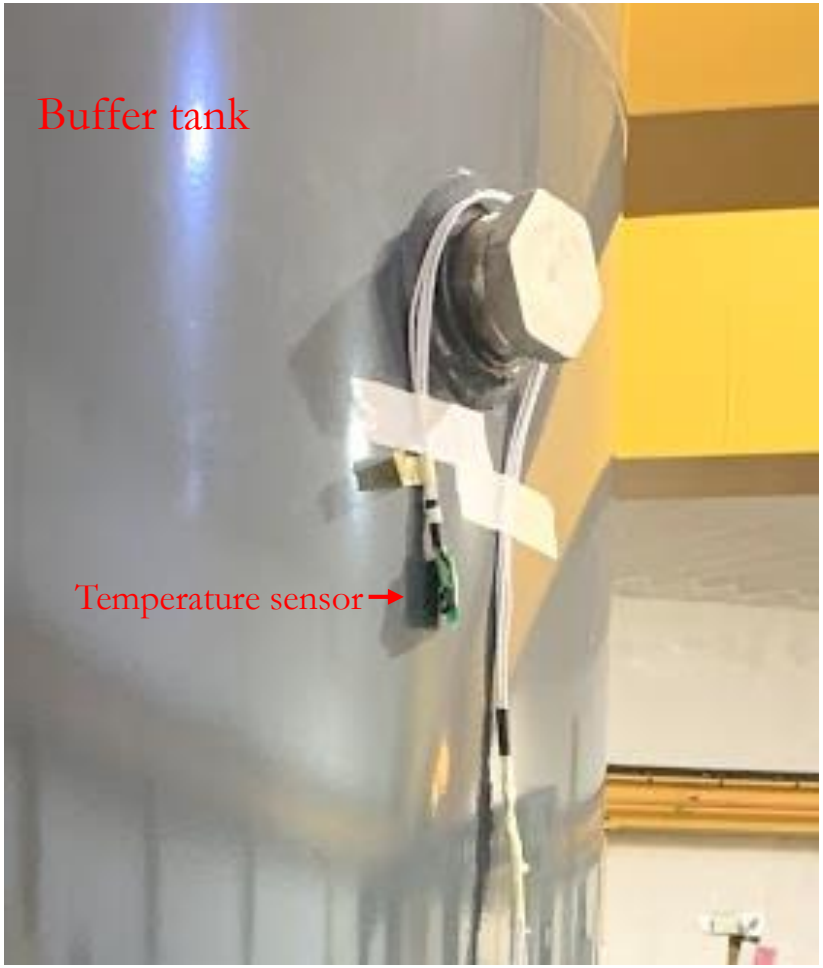

Temperature sensor on FC – Top Deck.

Near Future Tasks

- Run Compressor 2 for tests and upcoming physics run
- If needed, attach external blowers to exhaust lines to provide additional cooling airflow

External blower rated for 863 cfm flow

Long Term Tasks

- Investigate new compressor able to run two RICH sectors
  - Must be rated for 100% duty-cycle (constant operation)
  - Provide at least 2000 slm of airflow
- If new compressor procured, existing Compressor 1 and Compressor 2 would be used as spares and could be used in EEL for assembly and testing of new RICH sectors

Post-Optimization Temperatures Agree with Calculation

- Resulting FPGA temperatures agree with calculation performed for RICH EP heat load with 700 slm airflow.

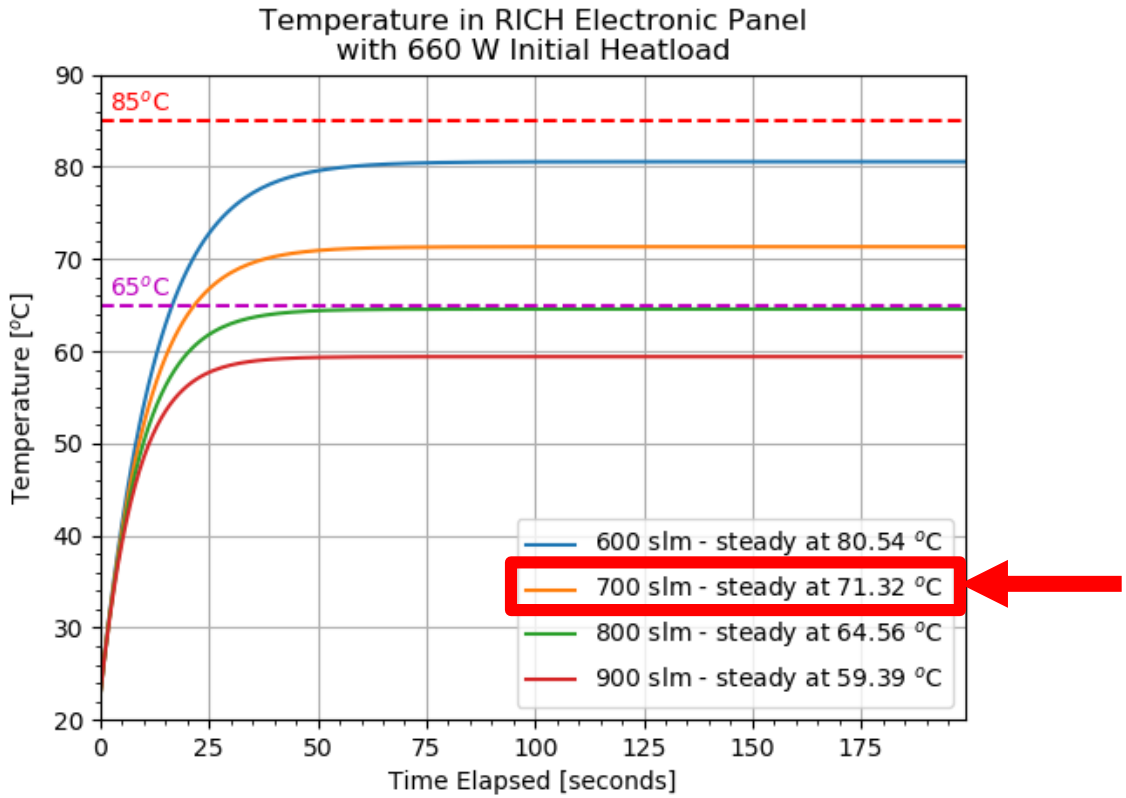

Conclusion

- Compressor 2 operational for next physics run
- Cooling system optimization complete
  - Compressor low-high threshold evaluated
  - Airflow adjusted to 720 slm (450 + 270)
- Other ways to improve cooling under investigation
  - Relocate, insulate, and/or chill buffer tank
  - Use external blowers to provide additional flow to electronic panel
- Researching better suited new compressors for operations

Thank You