Hall A @ “12 GeV”

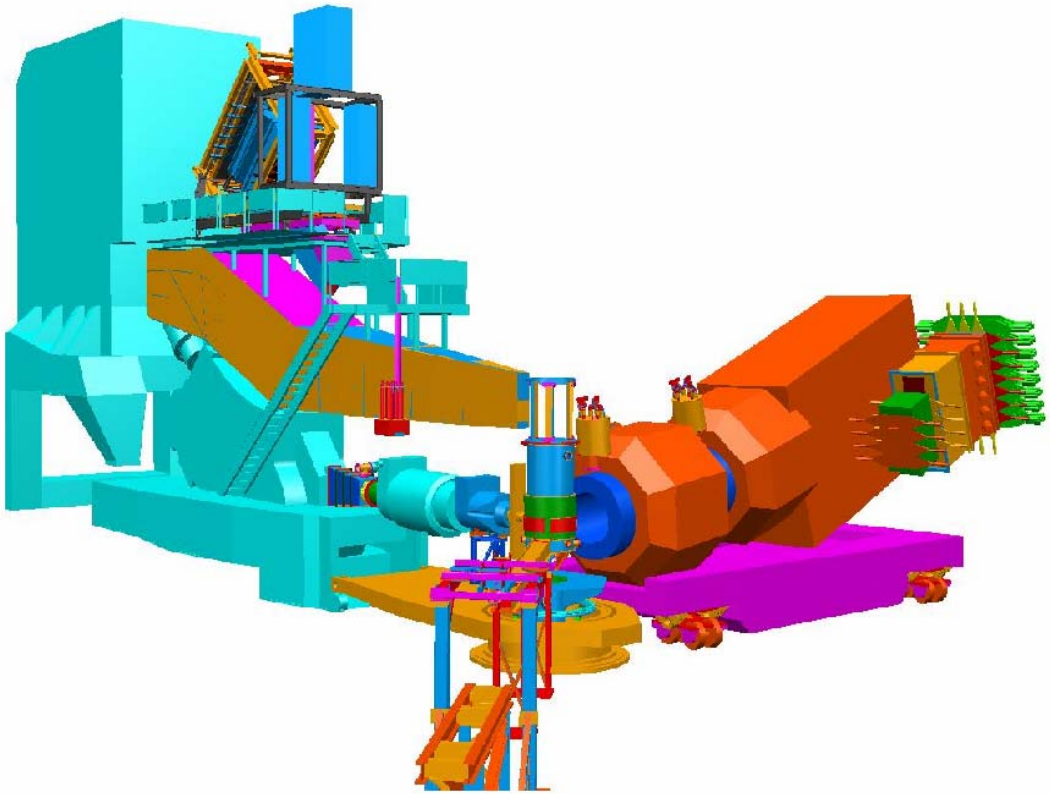

Experimental Requirements

No.	Exp's	Pmax (GeV/c)	Angle (degrees)	Acc(angle) (msr)	Acc(mom) (%)	Res(mom) (%)	Res(ang) H, V(mr)	Luminos-ity (10^37)	e or h?
1	d/u (3H/3He)*	6	15-30	15-30	30	0.3	1-3	10	e
2	A1n,g1n	6-7	15-30	15-30	30	0.3	2-3	0.1	e
3	g2n	6	15-30	15-30	30	0.3	2-3	0.1	e
4	A1p,g1p	6-7	15-30	15-30	30	0.3	2-3	0.01	e
5	spin duality	6-7	12-25	12-25	30	0.3	2-3	0.1	e
6	g1 at high E	6-7	12	12	30	0.3	1-3	0.1	e
7	DIS-Parity	6-7	12-15	12-15	30	0.3	1-3	100	e
8	semi-pi+/pi-	6	15-25	15-25	30	0.3	2-3	5	e
9	d_bar/u_bar	6	15-25	15-25	30	0.3	2-3	40	e
10	delta_u, d, s	6	15-25	15-25	30	0.3	2-3	0.1	e
11	transversity	6	15-38	15-30	30	0.3	2-3	0.1	e
12	pi struc. fun.	3	15-22	15-25	30	0.3	2-3	0.1	e
13	charm	6-7	12-15	12-15	30	0.3	1-3	40	e
14	hadronization	6	12-30	12-30	30	0.3	2-3	40	e
15	x>1	7	12-60	12-30	30	0.2	1-3	40	e
16	Gen	6	15-20	15-20	30	0.3	2-3	0.1	e
17	Gep/Gmp	7-8	15-35	15-30	30	0.3	2-3	40	p, FPP
16	CT (e,e'p)	7-8	15-35	15-30	30	0.3	2-3	40	p
17	CT with FPP	7	15-40	15-30	30	0.3	2-3	10	p, FPP
18	CT in pion prod	6	12-30	12-30	30	0.3	2-3	20	pi
19	pi+- photoprod	6	12-30	12-30	30	0.3	2-3	20	pi
20	pi0 photoprod	7	12-90	12-30	30	0.3	2-3	20	p, FPP
21	KLambda	6	12-90	12-30	30	0.3	2-3	20	p
22	gamma-d	4	20-40	20-30	30	0.3	2-3	20	p, FPP

New equipment to meet experimental needs:

In addition to the existing equipment:

- HRS pair
- BigBite
- Beamline instrumentation (BCM's, BPM's, Polarimeters, …)
- ...

- Large Acceptance Moderate Resolution Magnetic spectrometer (MAD)
- Large Acceptance, High Resolution Photon Calorimeter
  - $\Delta\Omega \sim 0.1$ sr.
  - 676 PbF_2 Crystals (26 x 26 x 200mm^3)

RCS Setup

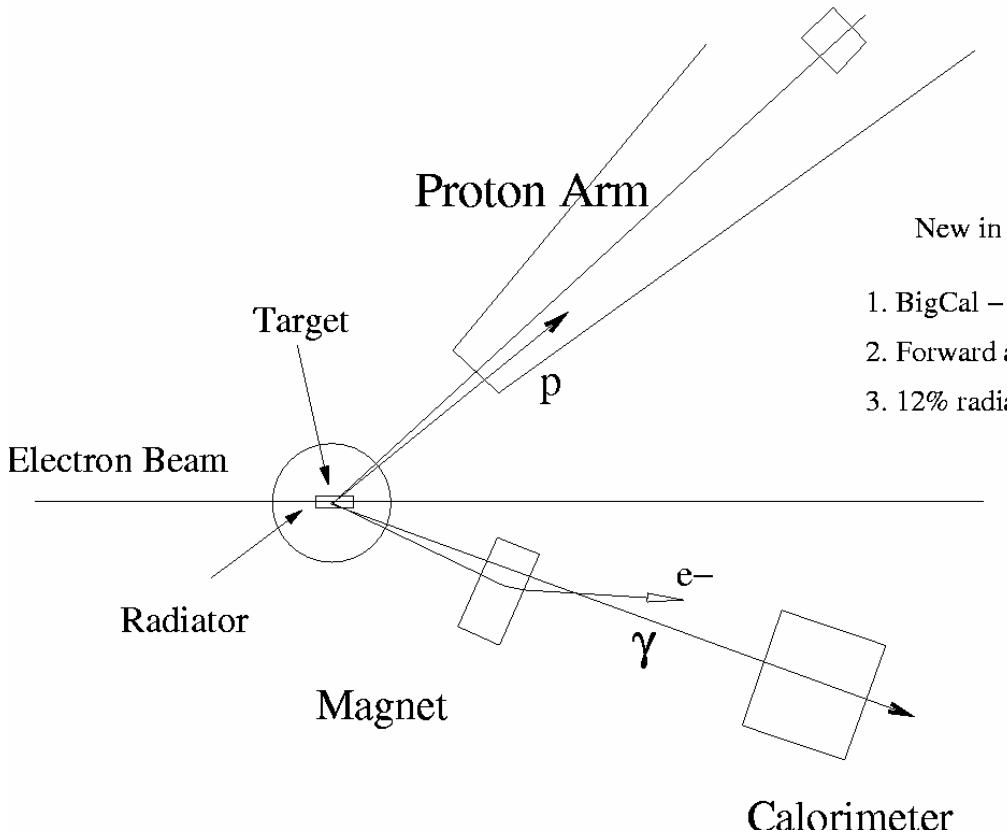

New in 12 GeV setup:

1. BigCal – 1700 modules
2. Forward angle , high momentum PS
3. 12% radiator, local shielding

Spectrometer Requirements

- $\Delta\Omega$ ~ 30 msr at 35° (~ 15 msr at 15°)
- Momentum Acceptance: $\Delta P / P \approx 30\%$
- Maximum Central Momentum: ~ 8 GeV/c
- Minimum Scattering Angle: 12-15°
  - reduced $\Delta\Omega$ at smaller angles
- Moderate Resolutions:
  - ~0.3% in momentum
  - ~1 mr (~3 mr) in horizontal (vertical angles)

The MAD
Medium Acceptance Device

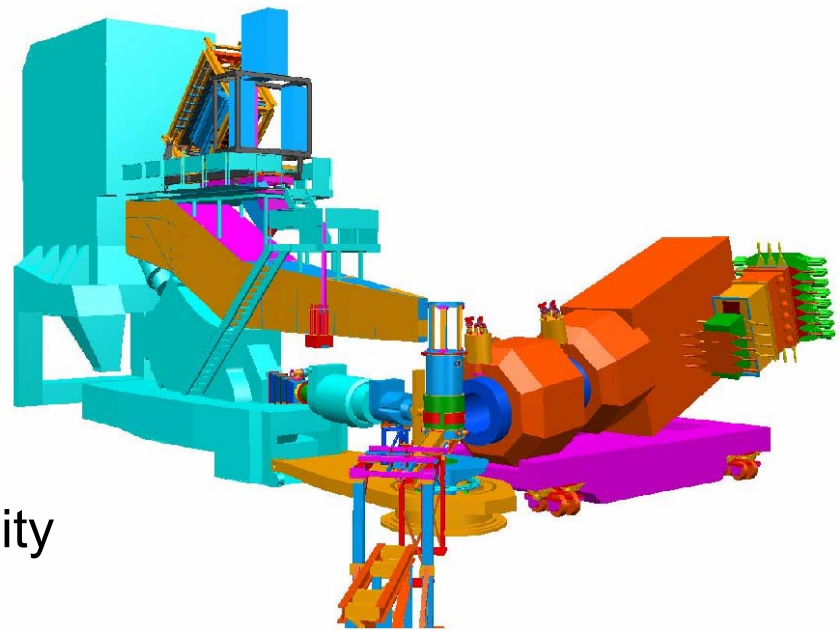

- 2 combined function magnets:
  - Quadrupole + Dipole
  - Field components are independently tunable ➔ versaltility
- ~30º bend (10 + 20)
- Adjustable initial drift provides smaller scattering angles at reduced $\Delta\Omega$

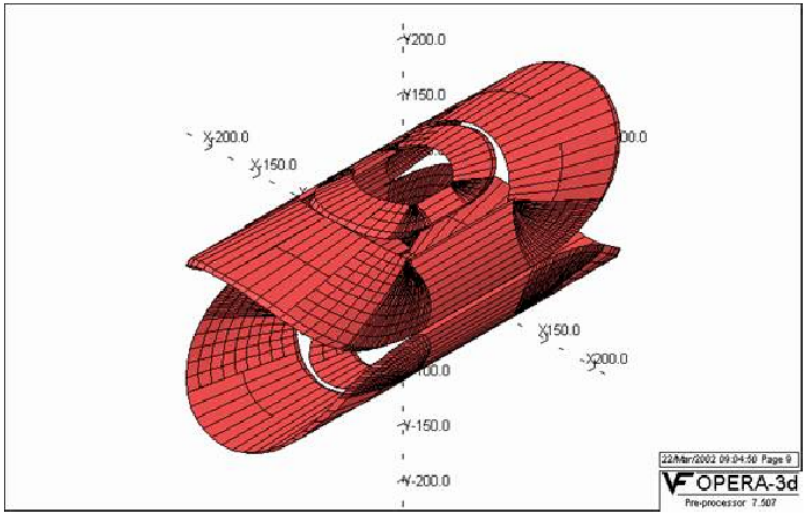
Y200.0
Y150.0
Y-150.0
Y-200.0
OPERA-3d
Pre-processor 7.507

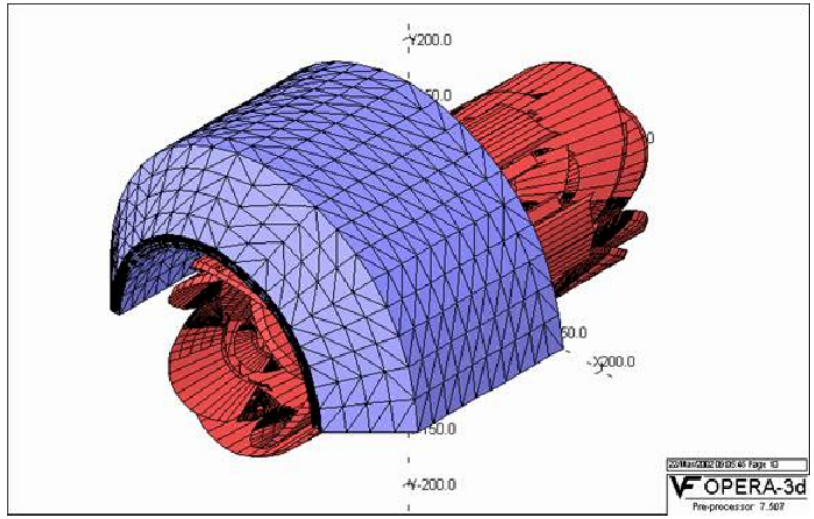
Y200.0
Y-200.0
OPERA-3d
Pre-processor 7.507

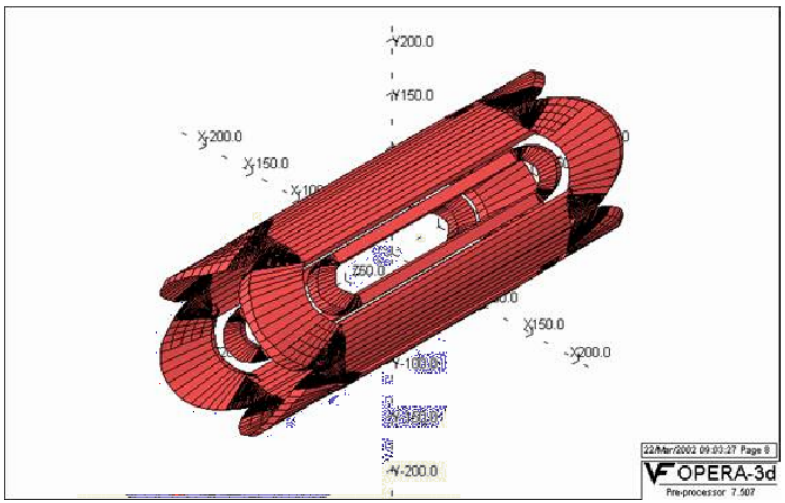
Y200.0
Y150.0
Y-200.0
OPERA-3d
Pre-processor 7.507

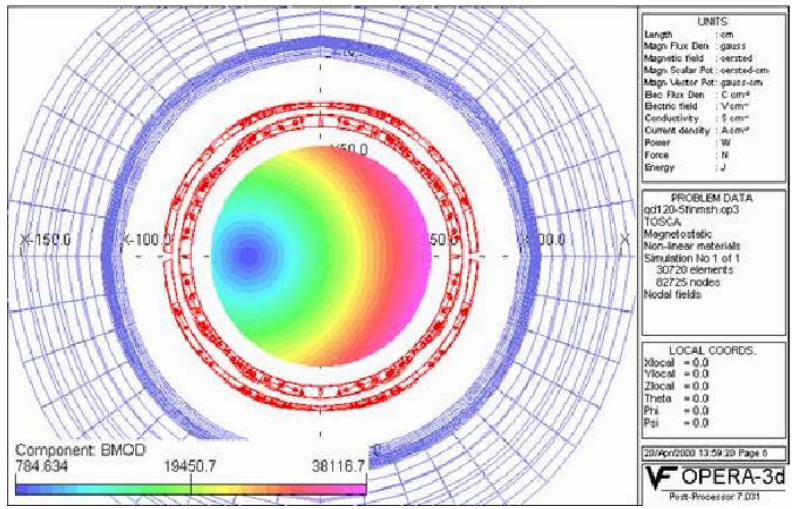
UNITS:
Length : cm
Magn Flux Den : gauss
Magnetic field : oersted
Magn Scalar Pot : oersted-cm
Magn Vector Pot : gauss-cm
Elec Flux Den : C cm⁻²
Electric field : V cm⁻¹
Conductivity : S cm⁻¹
Current density : A cm⁻²
Power : W
Force : N
Energy : J
PROBLEM DATA
qd120-Stirmsh.op3
TOSCA
Magnetostatic
Non-linear materials
Simulation No 1 of 1
30720 elements
62725 nodes
Nodal fields
LOCAL COORDS.
Xlocal = 0.0
Ylocal = 0.0
Zlocal = 0.0
Theta = 0.0
Phi = 0.0
Psi = 0.0
Component: BMOD
784.634
19450.7
38116.7
OPERA-3d
Post-Processor 7.031

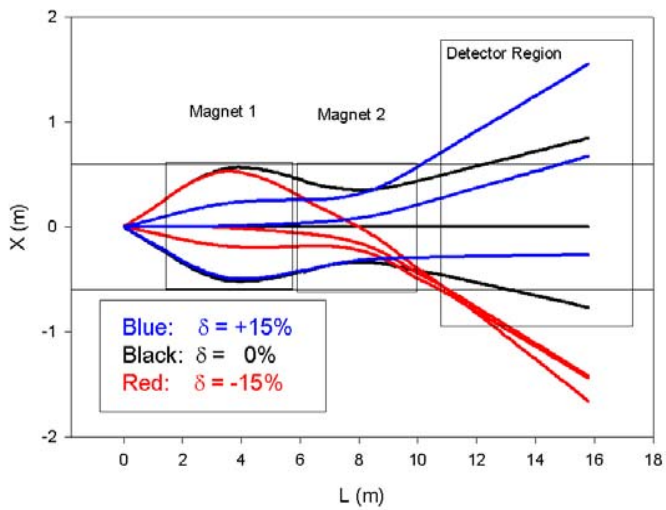

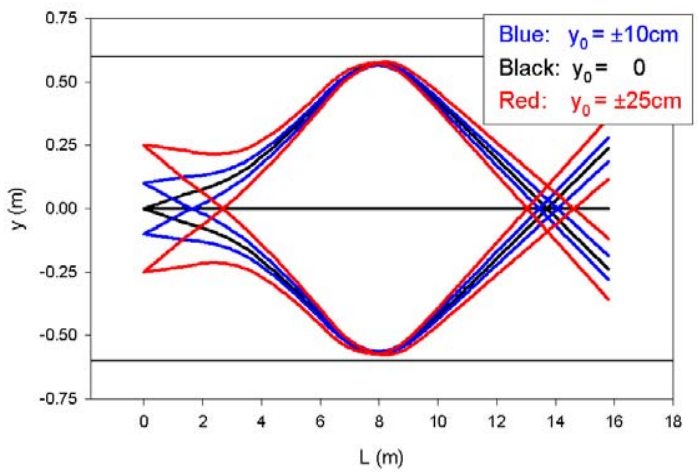

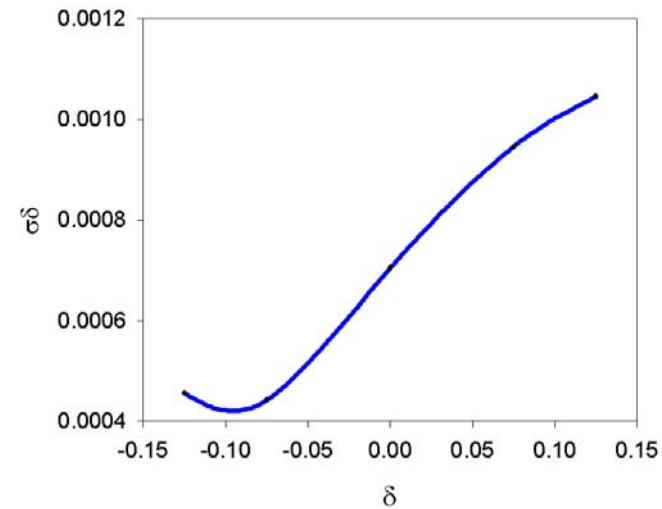

δ resolution at 6 GeV/c

Angular resolution at 6 GeV/c

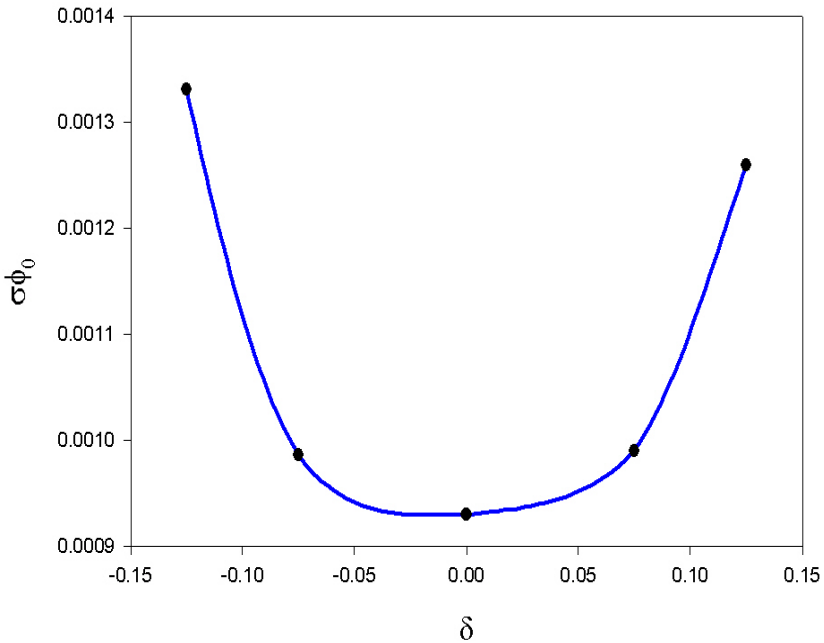

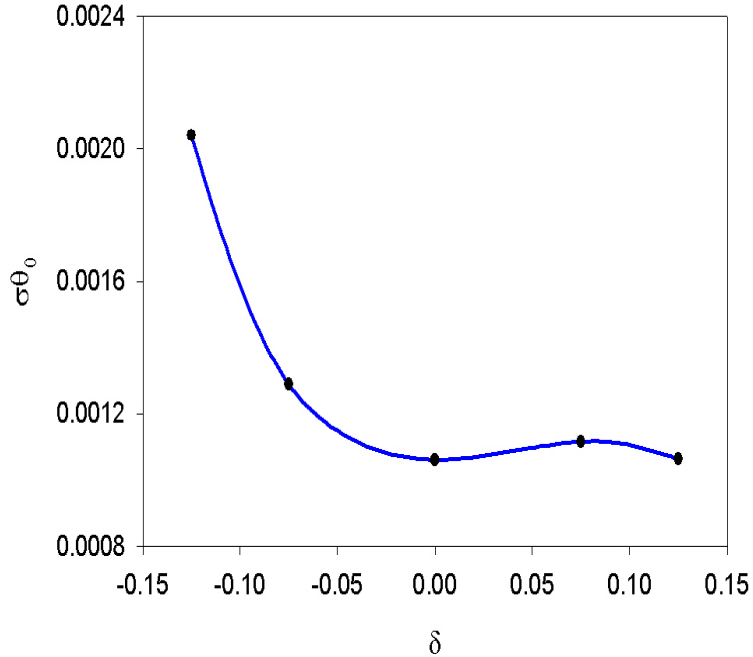

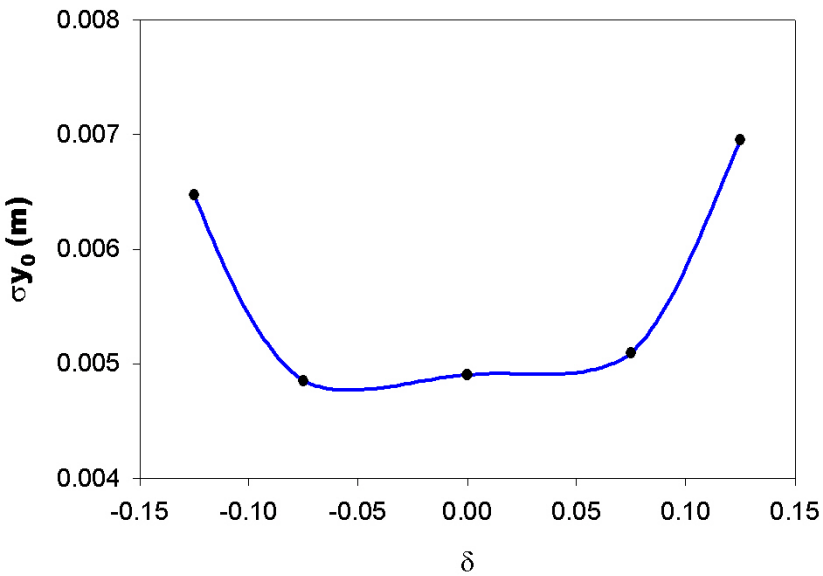
0.008
0.007
0.006
0.005
0.004
σy0 (m)
-0.15
-0.10
-0.05
0.00
0.05
0.10
0.15
δ

Detector Package

- Scintillators
- Drift Chambers
- Gas Čerenkov
- Aerogel Čerenkov
- Electromagnetic Calorimeter
- Focal Plane Polarimeter

MAD Detector Configurations

Leptons

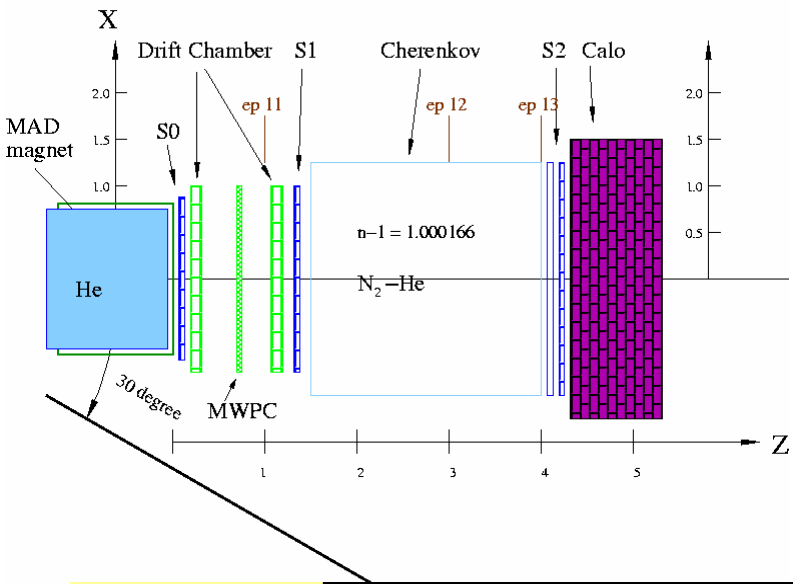

Hadrons

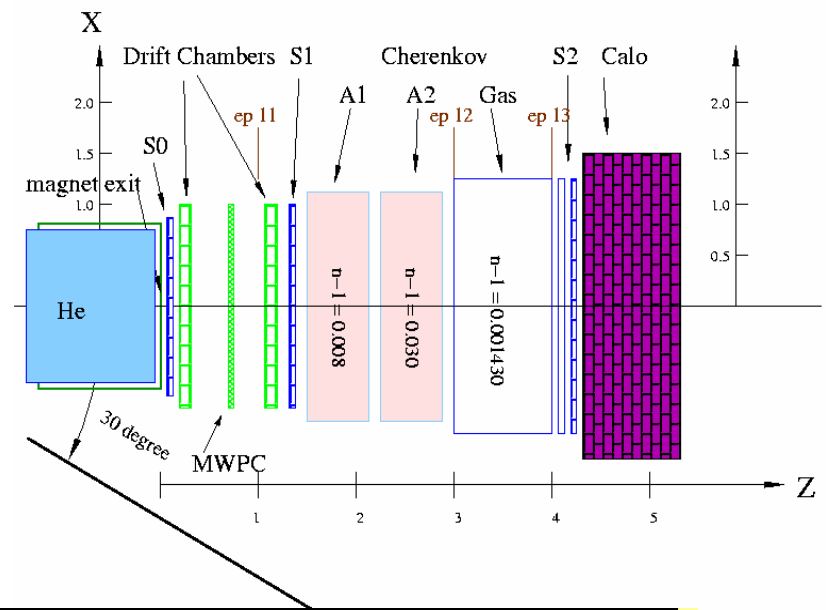

	Scintillators	Drift Chamber	Gas Čerenkov	Calorimeter
Sensitive area	50(60) x 200(250) cm^2	50 x 250 cm^2	60 x 250 cm^2	100 x 300 cm^2
Length	10, 10, 20 cm	100 cm	250 cm	100 cm
Segmentation	16 paddles, 4 planes	1200	12 PMT's	192 PMT's
Resolution	0.15 ns	75 μm	> 7.5 ph. Electrons	$10\%/E^{1/2}$

Hall A @ 12 GeV

- Versatile collection of instruments are planned addressing a broad spectrum of interesting Physics.
- Much more detail is available
  - See:http://hallaweb.jlab.org/12GeV/

Inclusive Structure Measurements

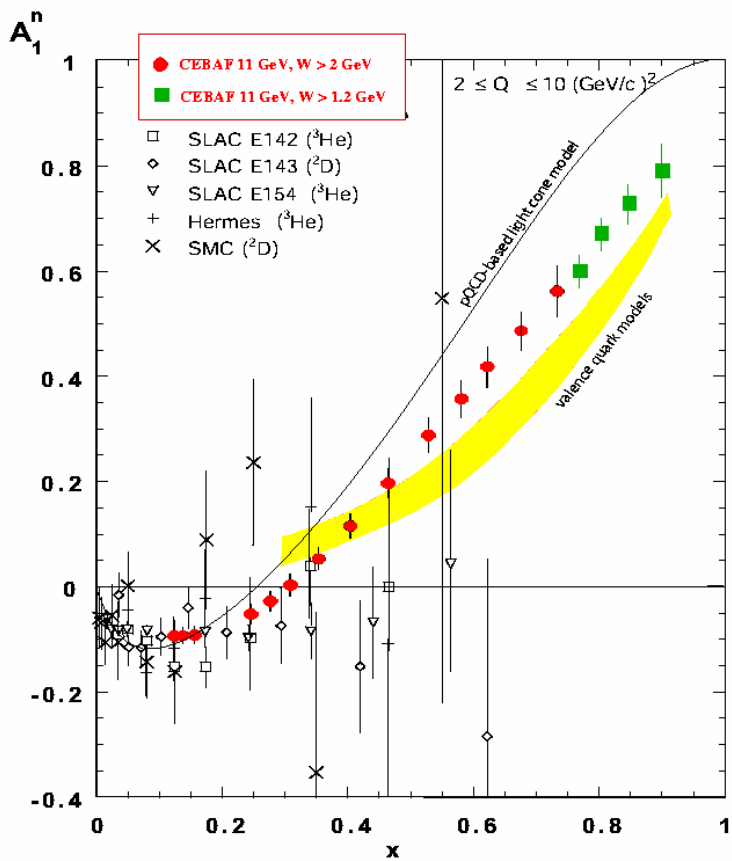

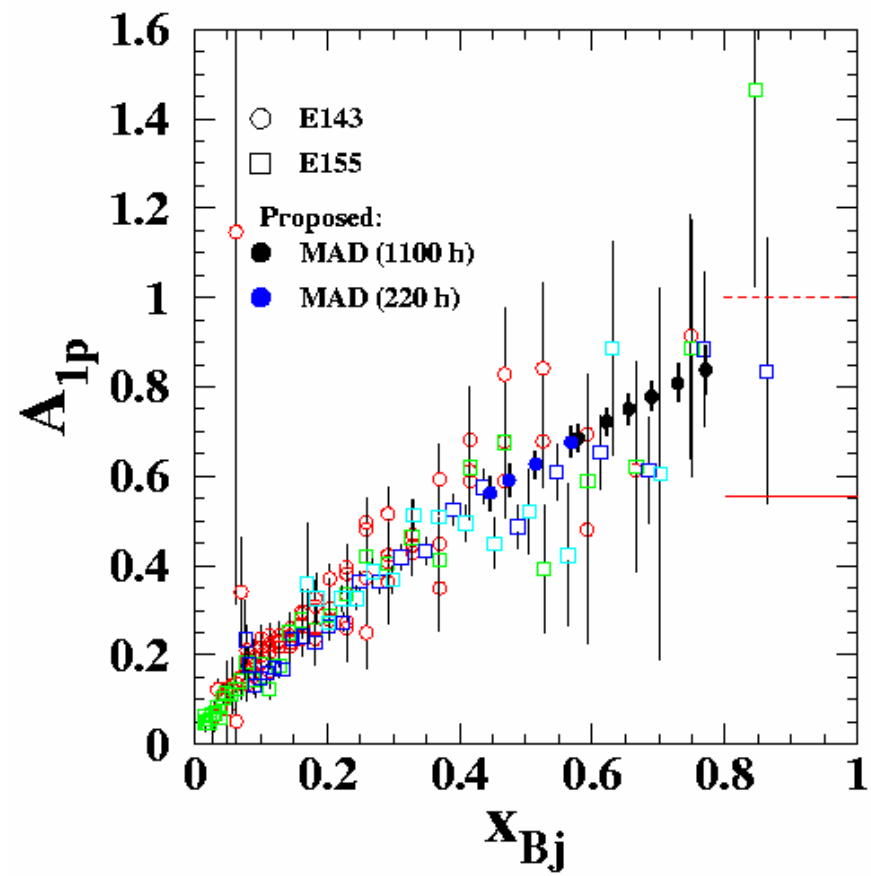

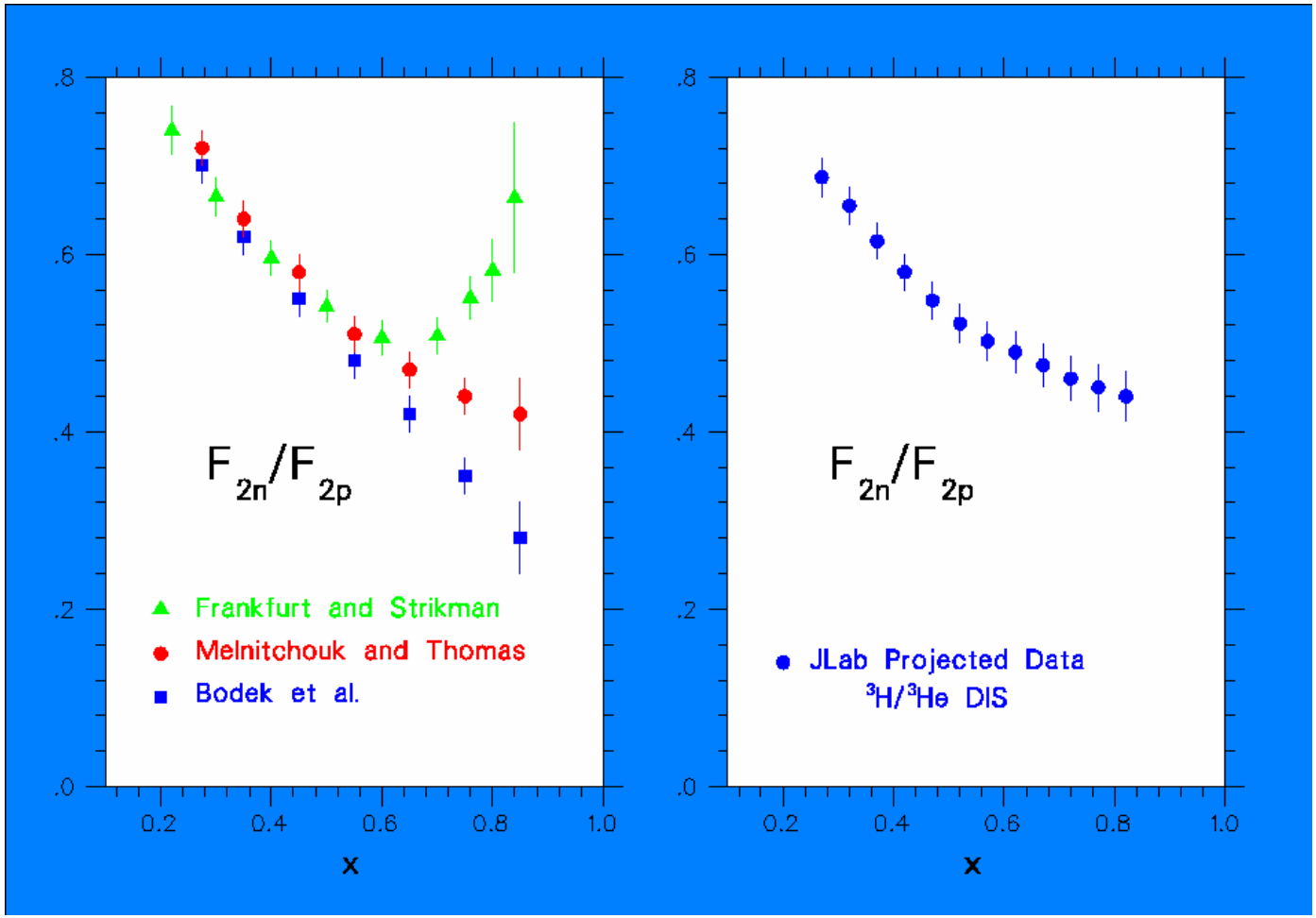
.8
.6
.4
.2
.0
0.2
0.4
0.6
0.8
1.0
x
F2n/F2p
Frankfurt and Strikman
Melnitchouk and Thomas
Bodek et al.
F2n/F2p
JLab Projected Data
3H/3He DIS

Semi-Inclusive Processes

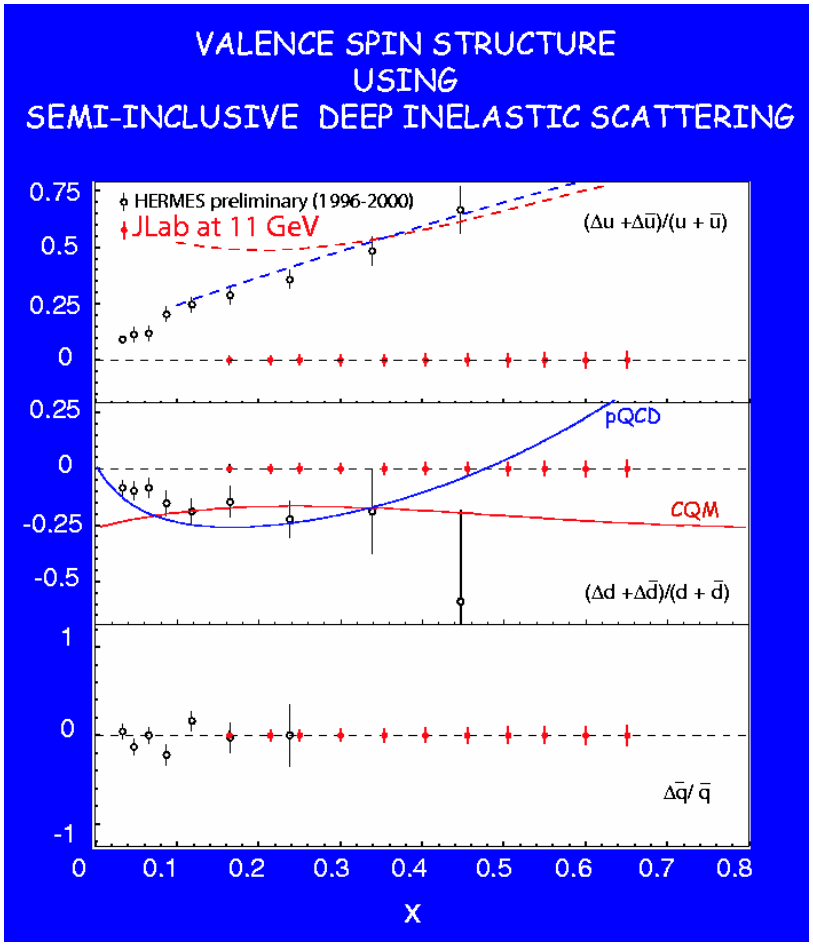

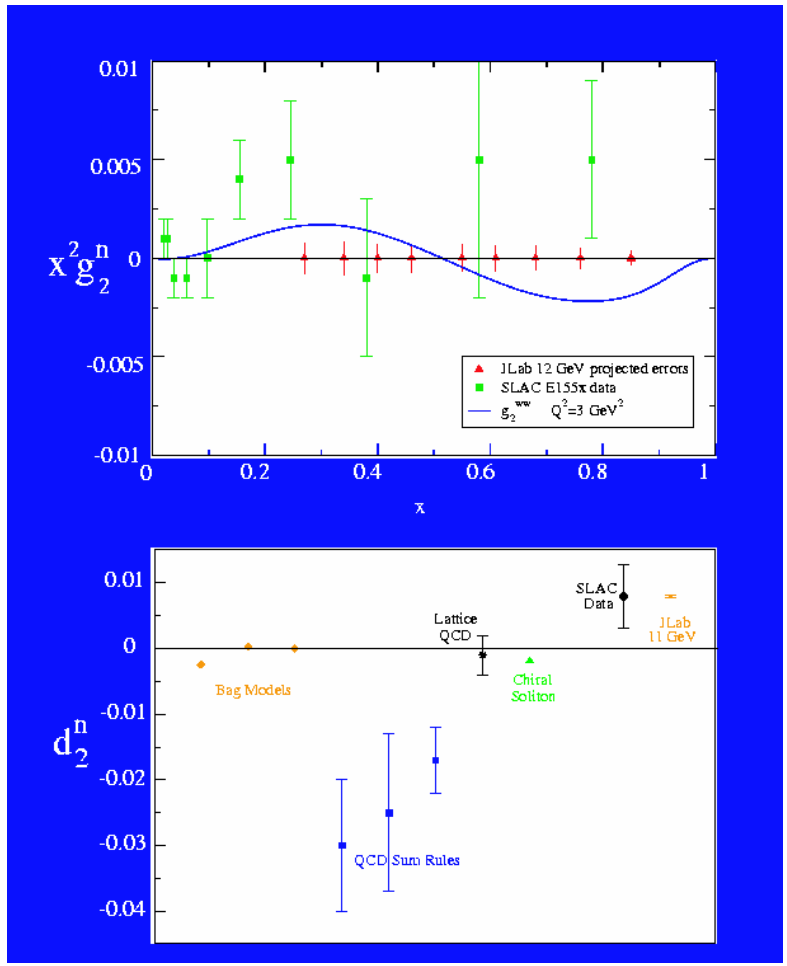

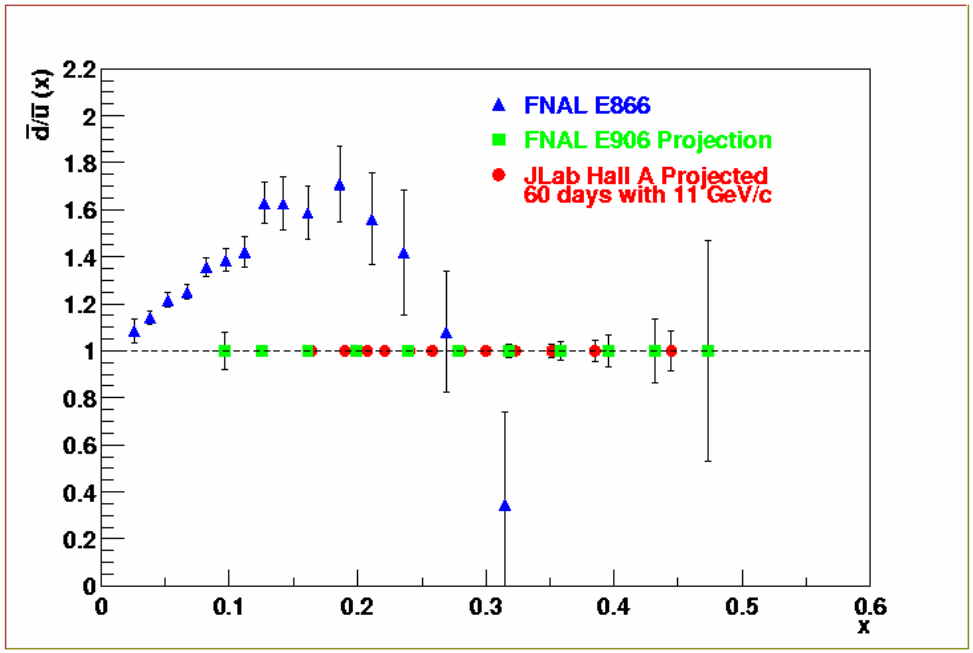
$\bar{d}/\bar{u}$ (x)
FNAL E866
FNAL E906 Projection
JLab Hall A Projected
60 days with 11 GeV/c
x

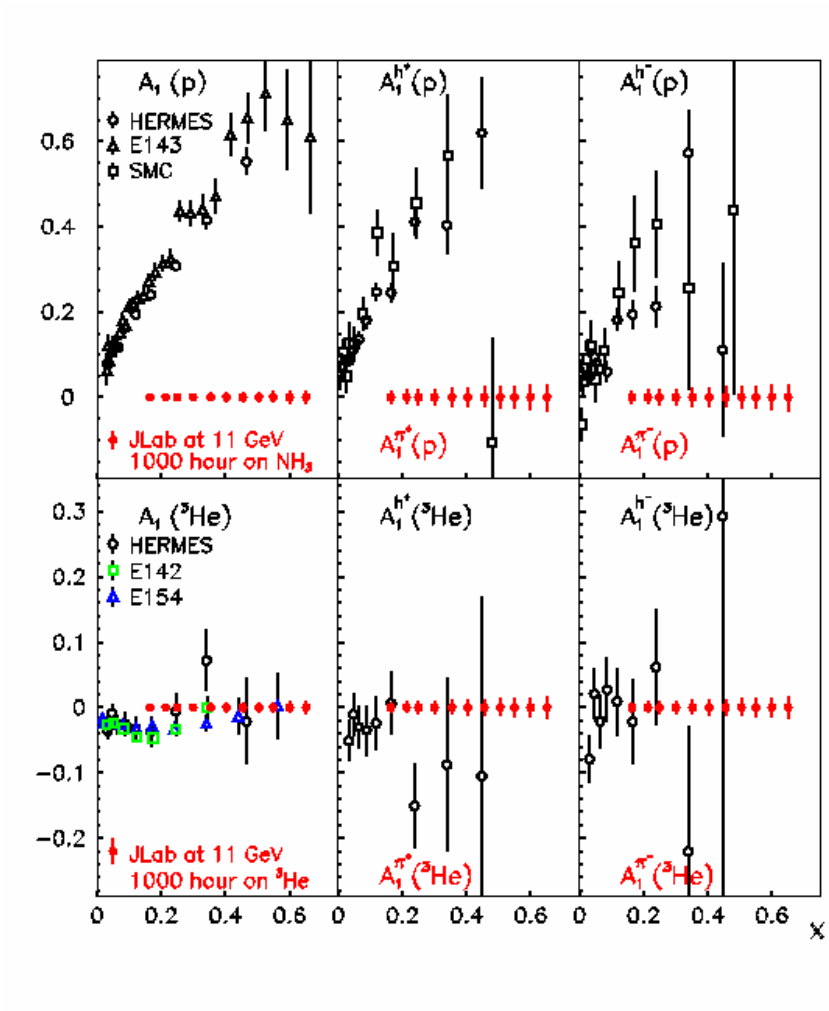
A_1 (p)
HERMES
E143
SMC
JLab at 11 GeV
1000 hour on NH_3
$A_1^{h^+}$(p)
$A_1^{\pi^+}$(p)
$A_1^{h^-}$(p)
$A_1^{\pi^-}$(p)
A_1 (^{3}He)
HERMES
E142
E154
JLab at 11 GeV
1000 hour on ^{3}He
$A_1^{h^+}$(^{3}He)
$A_1^{\pi^+}$(^{3}He)
$A_1^{h^-}$(^{3}He)
$A_1^{\pi^-}$(^{3}He)
x

Exclusive Processes

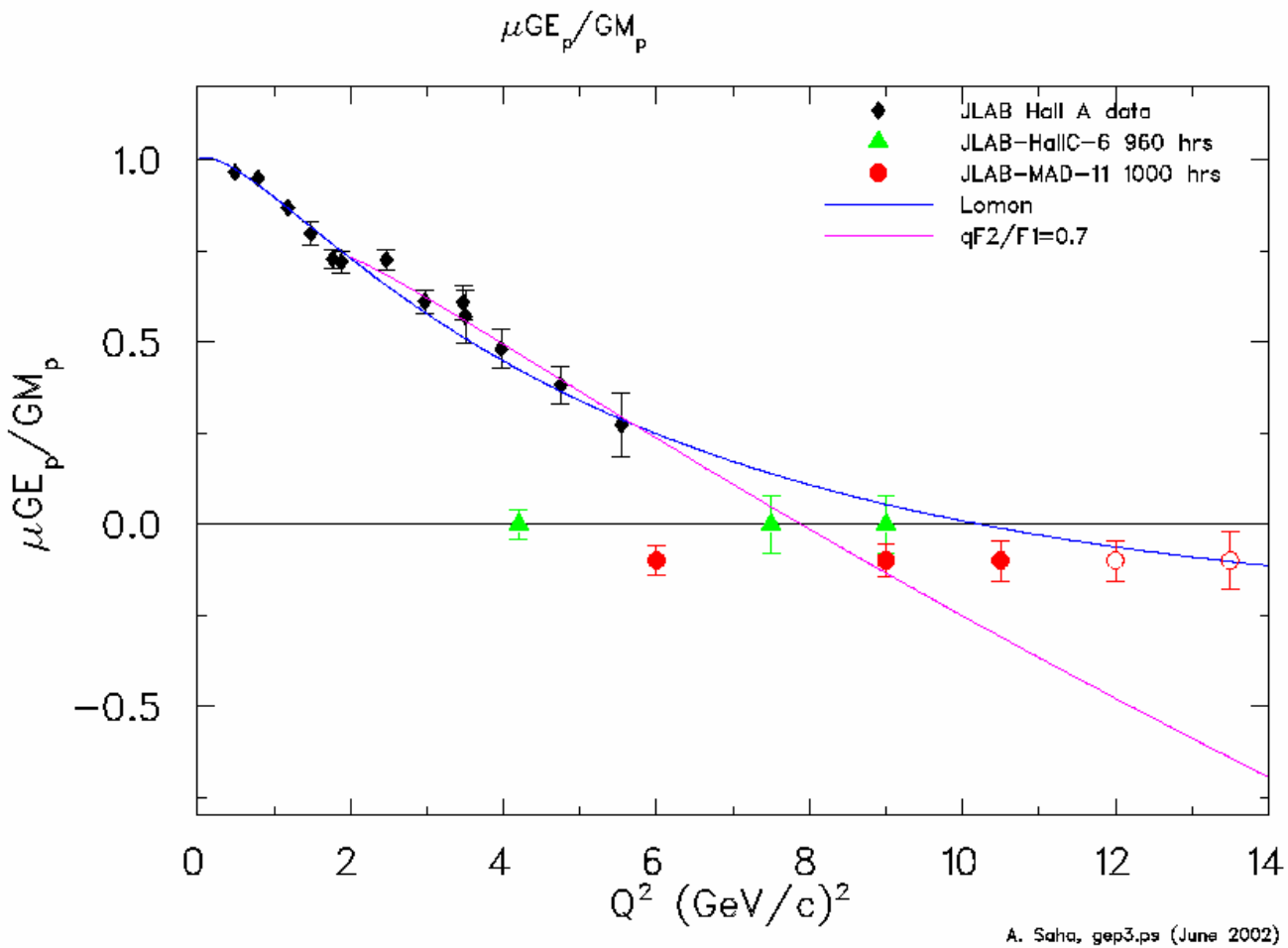

Hadrons in the Nuclear Medium

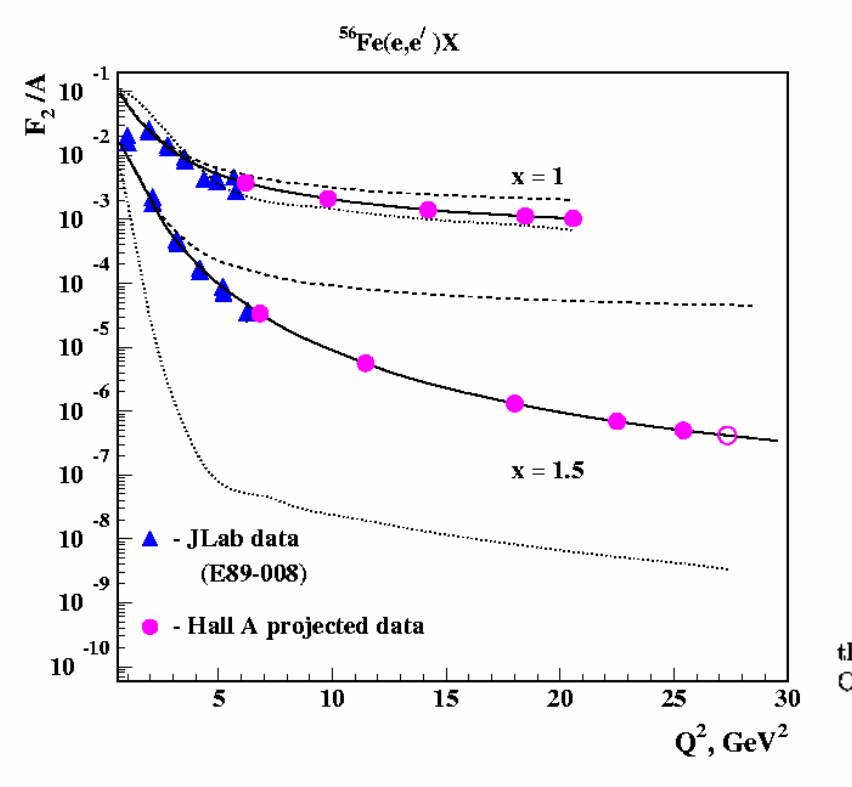

Charm Production Near Threshold

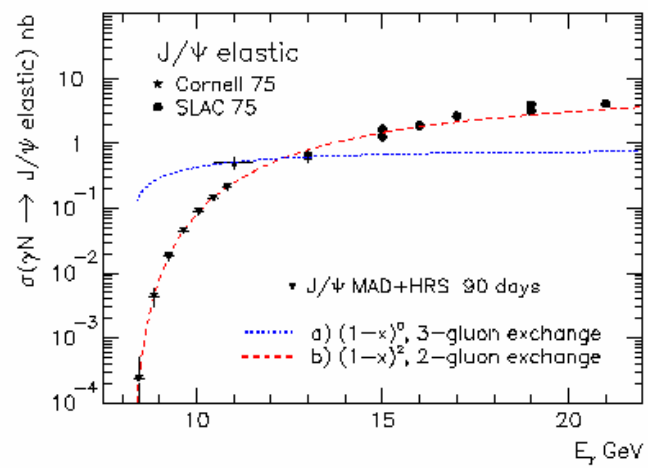

Variation of the cross sections of J/ψ photoproduction near threshold, for two or three gluon exchange mechanisms. The inverted triangles show the expected accuracy at CEBAF at 11 GeV beam.

“12 GeV” Beam in Hall A

Key Parameters of Beam quality

Parameter:	Present @ 6 GeV	With Upgrade @ 12 GeV*
Horizontal emittance ε_x	2.9×10^{-7} m.rad	9×10^{-6}
Vertical emittance ε_y	2.9×10^{-7} m.rad	1.9×10^{-6}
Energy Spread $\delta P/P$	1×10^{-4}	2×10^{-4}

* really 11 GeV

MAD Parameters:

Central Momentum	7.5 GeV/c		
$\Delta P/P_0$	$-15\% < \delta < +15\%$		
y_0 acceptance	-20 cm $< y_0 < +20$ cm[1]		
Configuration[2]	35°	20°	12°[3]
θ_0 acceptance	±198 m-rad	±138 m-rad	±68 m-rad
ϕ_0 acceptance	±35 m-rad	±32 m-rad	±23 m-rad
$\Delta\Omega$	~ 28 msr	~ 18 msr	~6 msr
2nd order[4] $\sigma\delta$	1.3×10^{-3}	1.0×10^{-3}	0.7×10^{-3}
1st order[5] $\sigma\theta_0$	1.9 m-rad	1.3 m-rad	0.6 m-rad
1st order[5] $\sigma\phi_0$	0.5 m-rad	0.5 m-rad	0.5 m-rad
1st order[5] σy_0	2.6 mm	3.6 mm	4.6 mm

[1] ϕ_0 span stays the same but minimum and maximum shift with y_0.
[2] Minimum central scattering angle. These values are only approximate and will ultimately depend on the detailed design of the magnets
[3] This is starting to look impractical. 15º looks better.
[4] Worst case software correction error for $\delta = 15\%$
[5] Assumes 0.5 m-rad angle determination and 100μm position