Hall B Status

CLAS Collaboration Meeting
June 16, 2005

Volker D. Burkert
Jefferson Lab

Run status
Publication status
Pentaquarks – a collaboration priority
Recent projects
2005/2006 run plan
Detector issues
12 GeV Upgrade, prototyping effort
PAC27/28

Hall B Status Overview

- 24 major CLAS production runs completed
  - e1a/b, g1a/b, g6a, e1c, e2a, g6b, g2a, g1c, g3, e1d, e5, eg1b, g8a, g6c, e1-6, e6, e2b, g7, e1e, e1f/g, eg2, g10, g11, eg3, e1-DVCSa , (+3 non-CLAS experiments: g5, rad-ϕ, PrimEx)

- Next scheduled experiment : G8b

- Publications
  - 17 technical papers published, 1 submitted
  - 43 physics papers published/accepted in refereed journals (7 CLAS related papers)
  - 2 submitted
  - 3 in collaboration review

- Projects in preparation for new experiments
  - Polarimeter for linearly polarized photons
  - BoNus detector (Neutron structure function)
  - Frozen Spin Target (search for missing N*'s)
  - Cerenkov counter for one CLAS sector (small Q^2 GDH)

- 12 GeV Upgrade – Preparation for CD-1 approval by 9/05
  - TOF prototyping (KNU, USC)
  - SVT prototyping (JLab, ODU)
  - Calorimeter prototyping

Technical Publications

• Torus Magnet		IEEE Mag.25 (1989) 1902
• Drift Chambers		
– construction	Mac Mestayer	NIM A323 (1992) 191
– update	Mac Mestayer	NIM A367 (1995) 316
– Region I	Dan Carman	NIM A419 (1998) 315
– Region II	L.M. Qin	NIM A411 (1998) 265
– Summary	Dan Carman	NIM A449 (2000) 81
• Cerenkov Counter	Paul Stoler	NIM A465 (2001) 414
• TOF Counters	Elton Smith	NIM 432 (1999) 265
• Start Counters	Simon Taylor	NIM A462 (2001) 484
• Forward Cal.	Cole Smith	NIM A460 (2001) 239
• Large Angle Cal.	Mauro Taiuti	NIM A447 (2000) 431
▪ Response	Mauro Taiuti	NIM accepted (2004)
• Tagging System		
– window	Jim O'Brien	NIM 421 (1999)
– tagger	Jim O'Brien	NIM 440/2 (2000) 263
• Polarized target	Chris Keith	NIM A501 (2003) 327
• FST coil design	O. Dzyubak	NIM A526 (2004) 132
• CLAS Overview	Bernhard Mecking	NIM A503 (2003) 513
• 2nd Start Counter	Gordon Mutchler	to be submitted to NIM

Hall B Physics Publications (refereed journals)

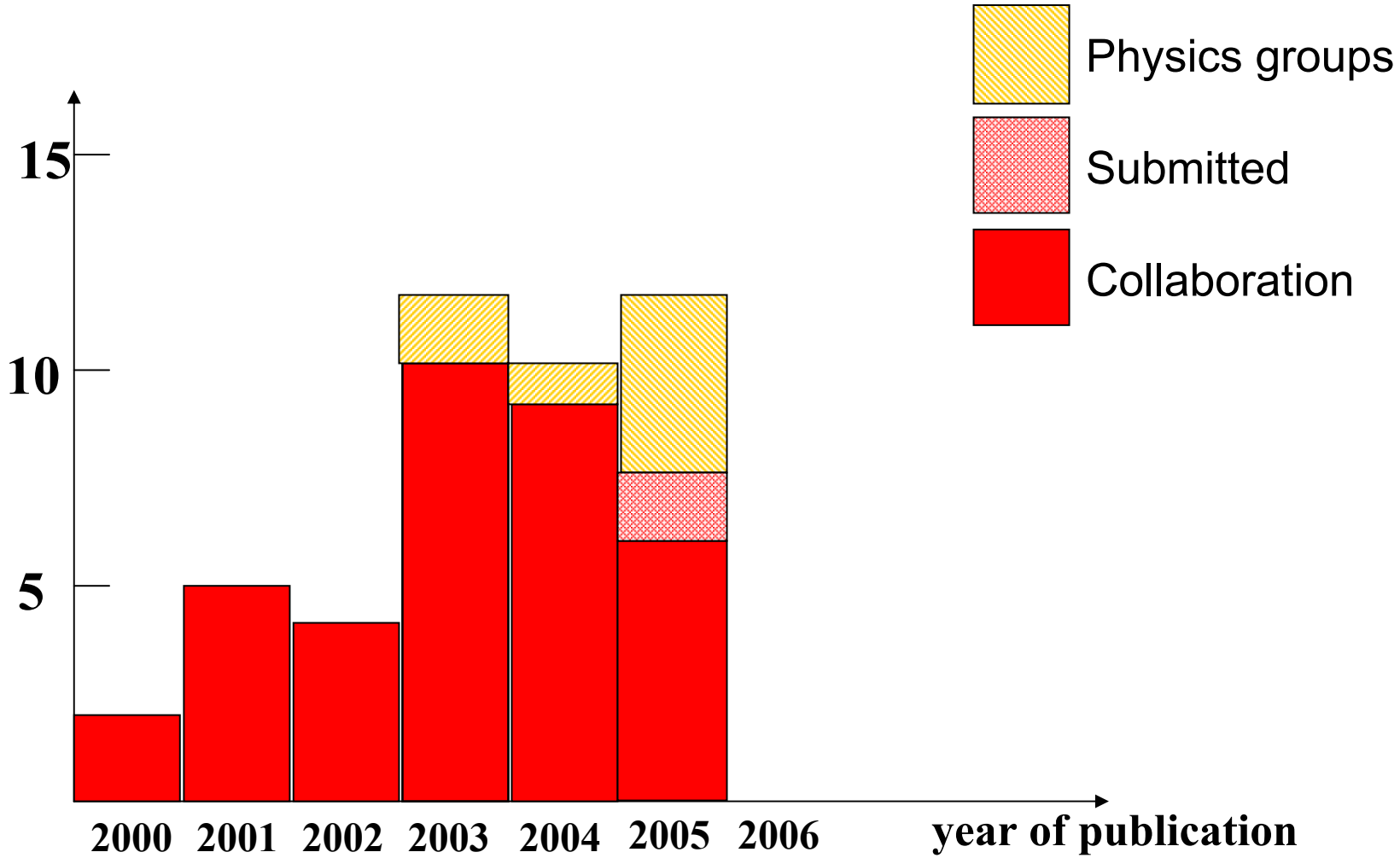

Hall B Publication Overview
Refereed Journals

	Spectroscopy & Structure	Hard scattering & Structure F.	Nuclear processes	Sum
2000	-	1	1	2
2001	2	3	-	5
2002	3	-	1	4
2003	7	4	1	12
2004	3	3	4	10
2005	4	4	2	10
Sum	19	15	9	43

Run Group Publications

E1:

▪ C. Hadjidakis et al.,	Exclusive ρ^0 electroproduction from hydrogen	PLB605, 256 (2005)
▪ K. Joo, et al.,	Measurement of $\sigma_{LT'}$ for $p(e,e\pi^+)n$ in Δ region	PRC70, 042201 (2004)
▪ K. Joo et al.,	Polarized structure function σ_{LT}' in $\Delta(1232)$ region	PRC68, 032201 (2003)
▪ D. S. Carman et al.,	First measurement of transferred polarization in $p(e,e'K^+)\Lambda$	PRL90, 131804 (2003)
▪ M. Ripani et al.,	Measurement of $p(e,e'p\pi^+\pi^-)$ and baryon resonance analysis	PRL91, 022002 (2003)
▪ K. Joo et al.,	Q^2 dependence of quadrupole strength in $\Delta(1232)$ excitation	PRL88, 122001 (2002)
▪ S. Barrow et al.,	Electroproduction of the $\Lambda(1520)$ hyperon	PRC64, 044601 (2001)
▪ M Osipenko et al.,	Kinematically complete measurement of F2 in N* region	PRD67, 092001 (2003)
▪ H. Avakian et al.,	Beam spin asymmetry for $p(e,e'\pi^+)X$ in DIS region	PRD69, 112004 (2004)
▪ S. Stepanyan et al.,	First observation of exclusive DVCS in beam asymmetry	PRL87, 182002 (2001)
▪ K. Lukashin et al.,	Exclusive electroproduction of ϕ mesons at 4.2 GeV	PRC63, 065205 (2001)
▪ R. Thompson et al.,	The $p(e,e'p)\eta$ reaction at and above the $S_{11}(1535)$	PRL86, 1702 (2001)

E1 - Physics Analysis groups:

❖ D. Carman, B. Raue	σ_L/σ_T for $p(e,e'K)\Lambda$ from polarization transfer	PRC, (2005).
❖ I. Aznauryan et al.;	Electroexcitation of Δ, P_{11}, S_{11}, D_{13} at Q^2=0.4, 0.65 GeV^2	PRC71, 015201 (2005)
❖ V. Burkert et al.,	Single Quark Transition analysis of N* in [70,1-] multiplet	PRC67, 035204 (2003)
❖ A. Afanasev et al.,	QED radiative corrections for exclusive pion production	PRD66, 022002 (2003)

Run Group Publications (cont'd)

E1-6:

- L. Morand et al., Deeply vitual and exclusive electroproduction of ω mesons EPJA (2005)

E2:

- D. Protopopescu et al., A_{LT}' in electron scattering on He-4 and C-12 NPA748, 357 (2005)
- A.V. Stavinsky et al., Proton source size measurements in A(e,e'pp)X PRL93, 192301 (2004)
- R. A. Niyazov, et al., Two-nucleon momentum distribution in 3He(e,e'pp)n PRL92, 052303 (2004)
- K. Egiyan et al., Observation of nuclear scaling in A(e,e') at xB > 1 PRC68, 014313 (2003)

E6:

- M. Osipenko et al, Deuteron structure function F2 and its moments PRD submitted (2005)

EG1:

- R. Fatemi et al, Proton spin structure function g1(x, Q^2) for Q^2=0.15-1.6 GeV^2 PRL91, 222002 (2003)
- J. Yun et al., Measurement of inclusive spin S.F.'s of the deuteron PRC67, 055204 (2003)
- A. Biselli et al., Polarized beam asymmetry for p(e,ep)π^0 in Δ(1232) region PRC68, 035202 (2003)
- R. De Vita et al., First measurement of double spin asymmetry in p(e,e'π+)n PRL88, 082001 (2002)

EG1 Physics Analysis groups:

- M. Osipenko et al., Global Analysis of Proton Structure Function g1 and Moments PRD 71, 054007 (2005)
- M. Osipenko et al., Higher twist analysis of the proton g_1 structure function PL B 609, 259 (2005)
- A. Deur et al., Experimental determination of the Bjorken Integral at low Q2 PRL 93, 212001 (2004)

Run Group Publications (cont'd)

G1:

- S. Taylor et al., Radiative decays of the $\Sigma^o(1385)$ and $\Lambda(1520)$ hyperons PRC, accepted (2005)
- K. McCormick et al., Tensor polarization of ϕ in high-t photoproduction PRC69, 032203 (2004)
- J.W. McNabb et al., Hyperon photoproduction in the nucleon resonance region PRC69, 042201 (2004)
- M. Dugger et al., Eta photoproduction on proton for energies 0.75-1.95 GeV PRL89, 222002 (2002)

G2:

- P. Rossi et al, Onset of asymptotic scaling in deuteron photodistintegration PRL94, 012301 (2005)
- M. Mirazita et al., Complete angular distributions in d(g,p)n from 0.5-3 GeV PRC70, 014005 (2004)
- S. Stepanyan et al., Observation of S=+1 baryon in $D(\gamma,K^+K^-p)n$ PRL91, 252001 (2003)

G3:

- S. Niccolai, et al., 3-body photodisintegration of He-3 for 0.55 - 3 GeV PRC 70 064003 (2004)

G5:

- C. Cetina et al., Photofission of Heavy Nuclei from 0.2 to 3.8 GeV PRC65, 044622 (2002)
- C. Cetina et al., Photofission of Heavy Nuclei at energies up to 4 GeV PRL84, 5740 (2000)

G6:

- J. Price, et al., Photoproduction of cascades from proton targets PRC, accepted (2005)
- V. Koubarovsky et al., Observation of baryon with S=+1 in $p(\gamma, K^+K^-\pi^+)n$ PRL92, 032001 (2004)
- M. Battaglieri et al., Photoproduction of ω mesons at large momentum transfer PRL90, 022002 (2003)
- M. Battaglieri et al., Photoproduction of $\rho 0$ on proton at large momentum transfer PRL87, 172002 (2001)
- E. Anciant et al., Photoproduction of ϕ at large momentum transfer PRL85, 4862 (2000)

Pentaquarks - A Collaboration Priority

CLAS results contributed substantially to the excitement over the pentaquark, and we have the main responsibility to clarify the current confusion over the existence.

The G10 and G11 groups are at the forefront, and have taken on this task with great seriousness.

Thanks to the excellent leadership, the highly motivated postdocs and graduate students, and the splendid calibration effort, the analyses are now in their final phases, just a year or even less after the experiments took data.

The CLAS pentaquark publication committee has taken on the responsibility with great seriousness and responded in a timely manner.

Pentaquarks - A Collaboration Priority, cont'd

To everyone involved, especially to the students and postdocs:

You are doing a great service not only to the collaboration but to the entire nuclear and particle physics communities, independent of what you are finding !

Cross Section Extraction

- Different final states are measured simultaneously in the CLAS detector
- Cross section for known reactions have been extracted to test the accuracy of the analysis procedure

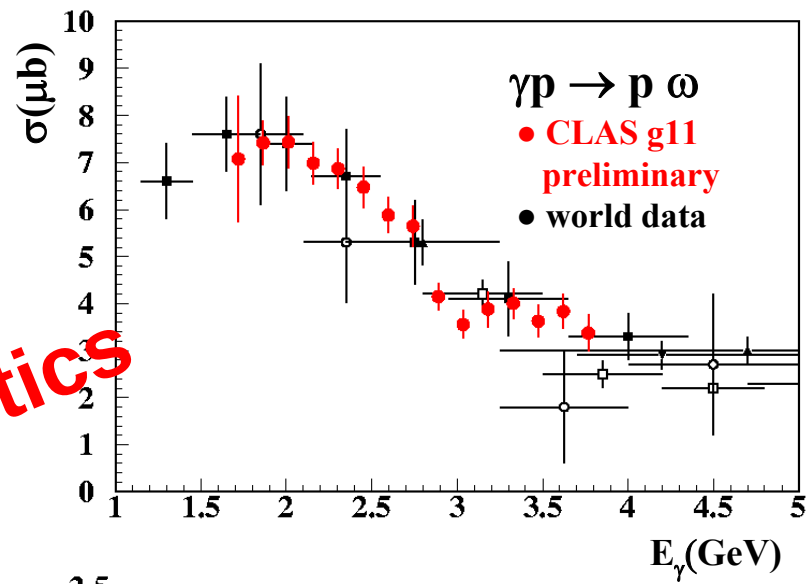

1% of statistics

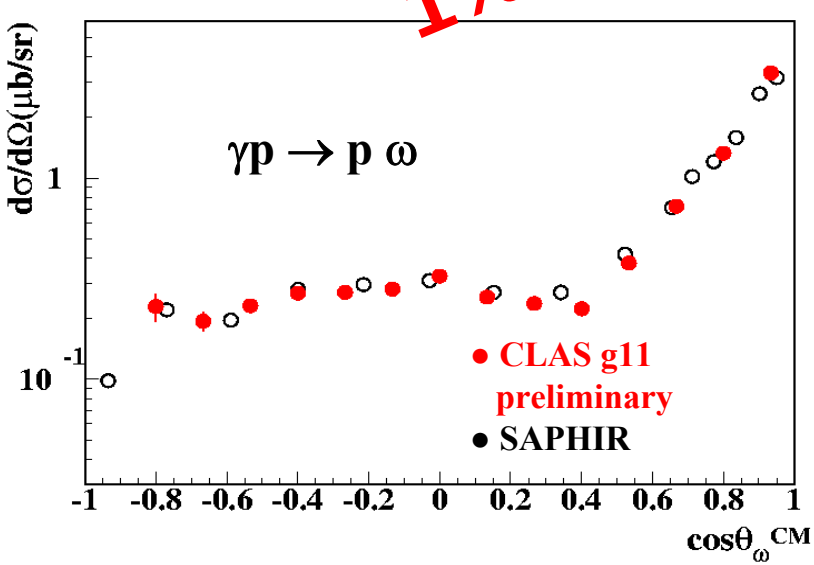

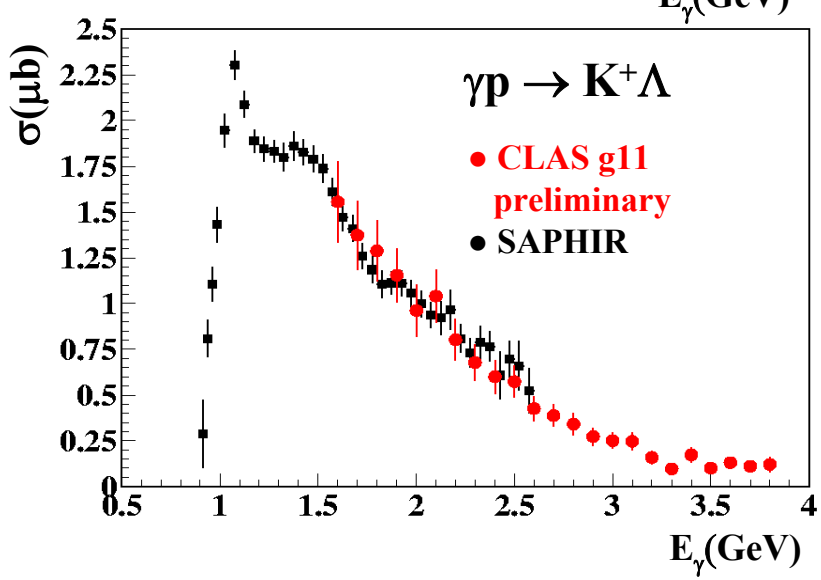

G11 - Preliminary Results

$\gamma p \rightarrow \pi^+ \pi^- K^+ n$

APS talk @ Tampa,
R. De Vita

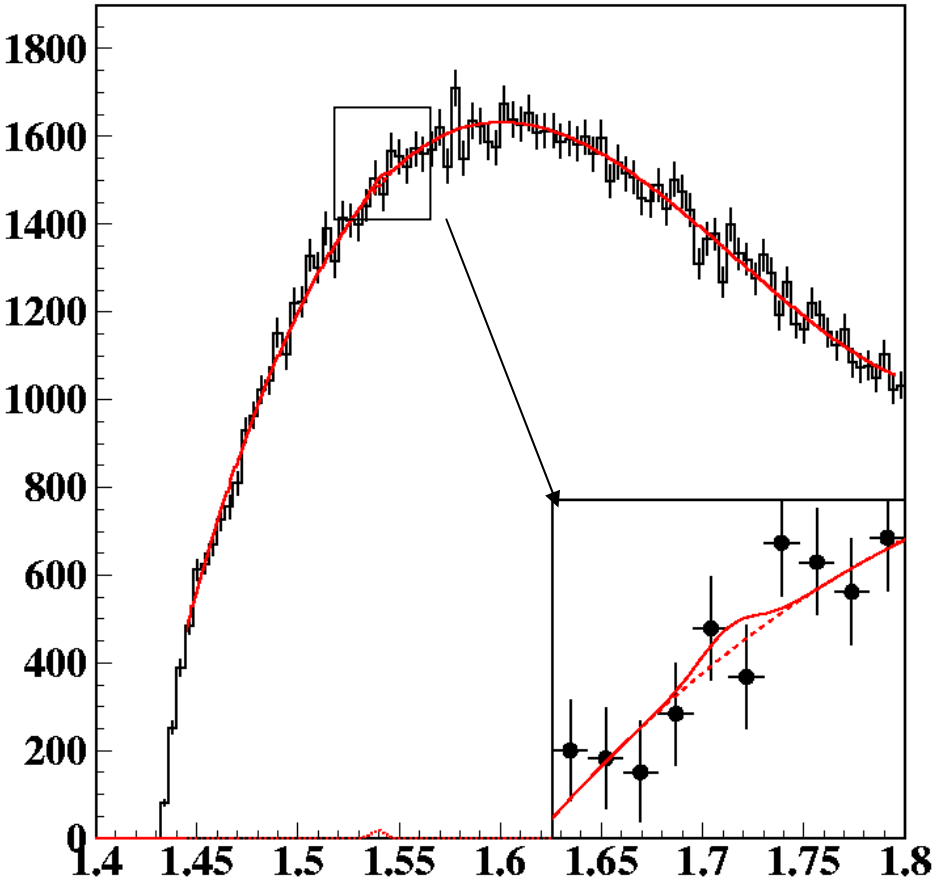

CLAS/DVCS

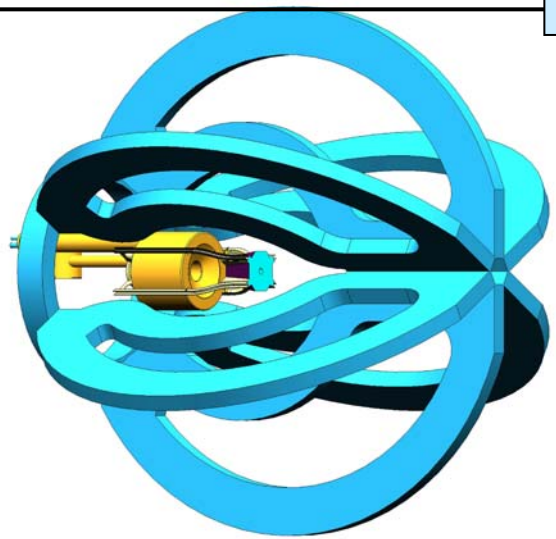

Superconducting solenoid

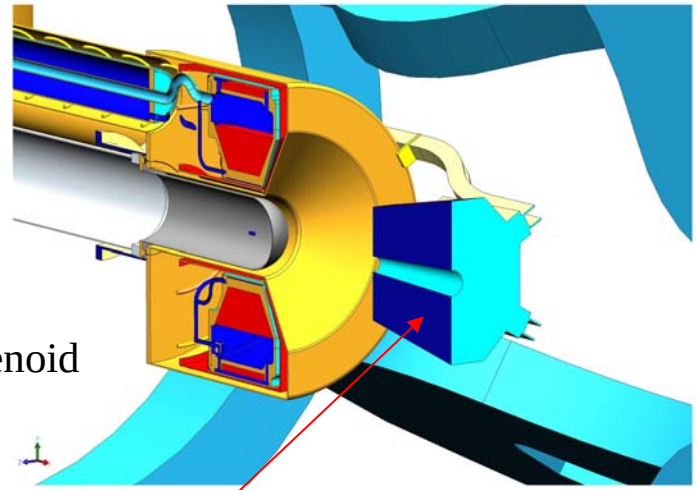

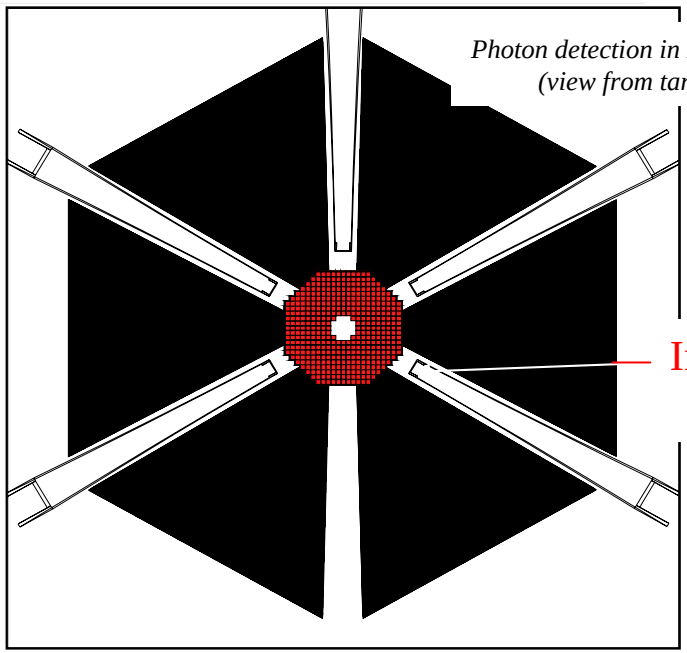

Inner calorimeter
($PbWO_4$)

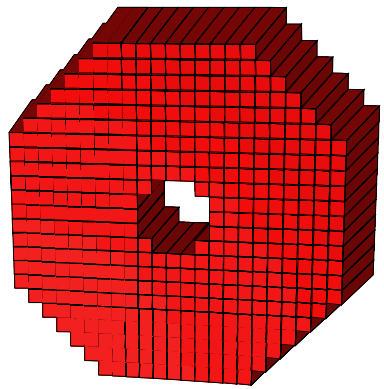

424 crystals, 16 mm long,
pointing geometry, ~ 1 degree/crystal,
APD readout

Hall B - DVCS Solenoid and Inner Calorimeter

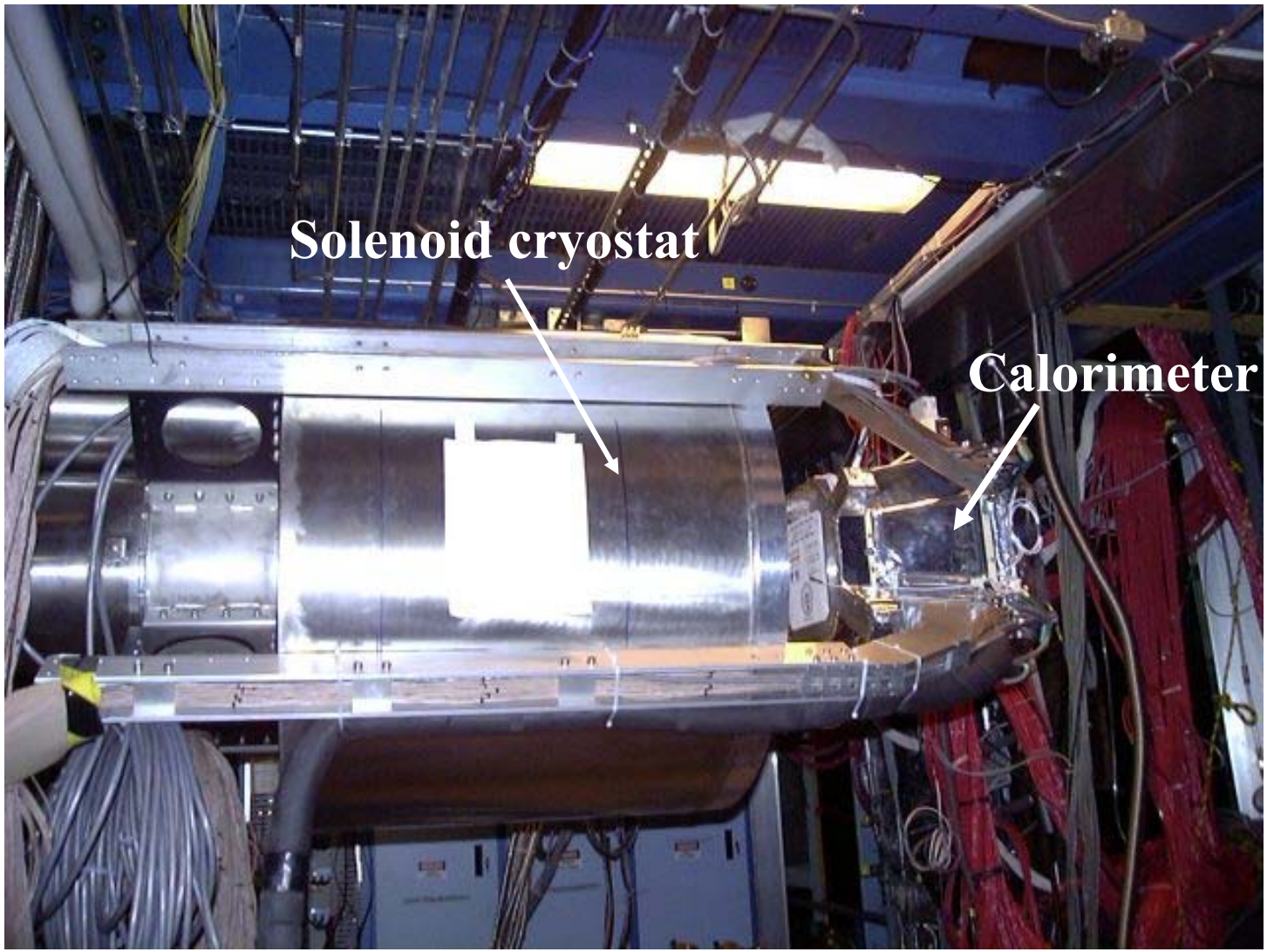

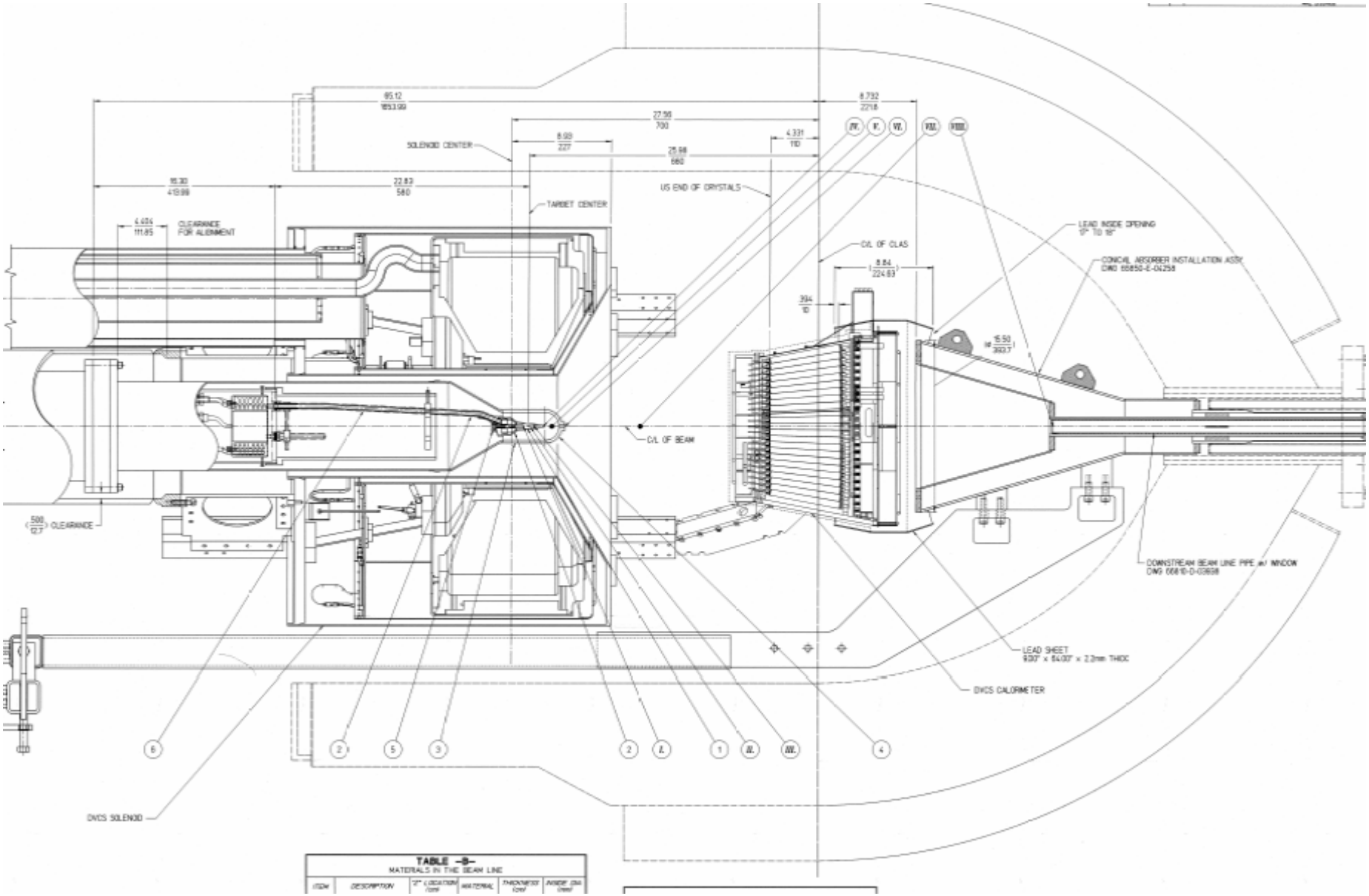

TABLE -9-
MATERIALS IN THE BEAM LINE

ITEM	DESCRIPTION	"Z" LOCATION (cm)	MATERIAL	THICKNESS (cm)	INSIDE DIA (mm)

2-cluster calibration events in IEC

E1-DVCS

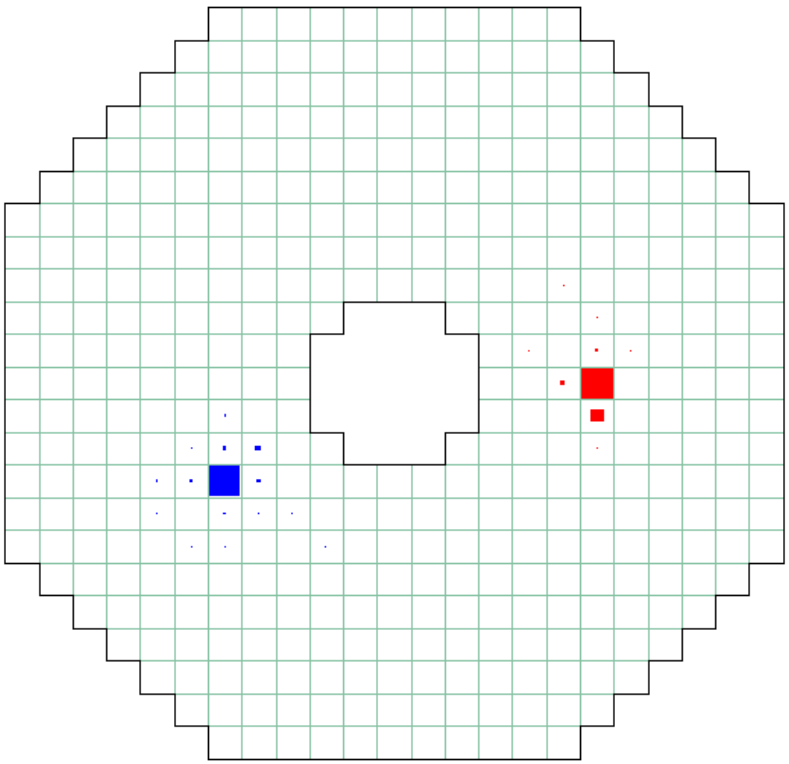

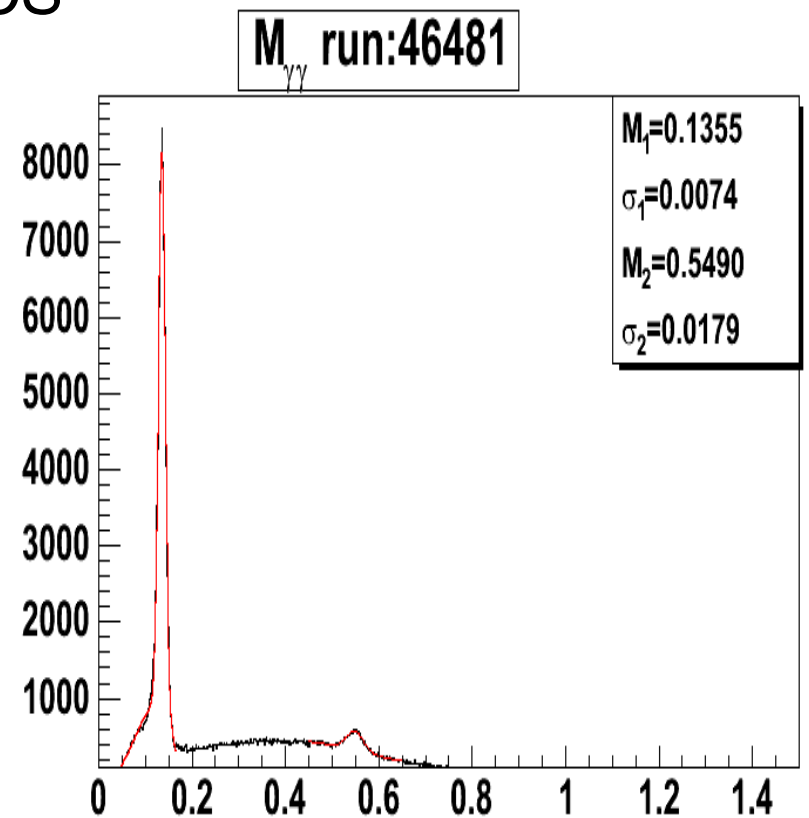

p(e,e'pγγ) reconstruction in CLAS

E1-DVCS

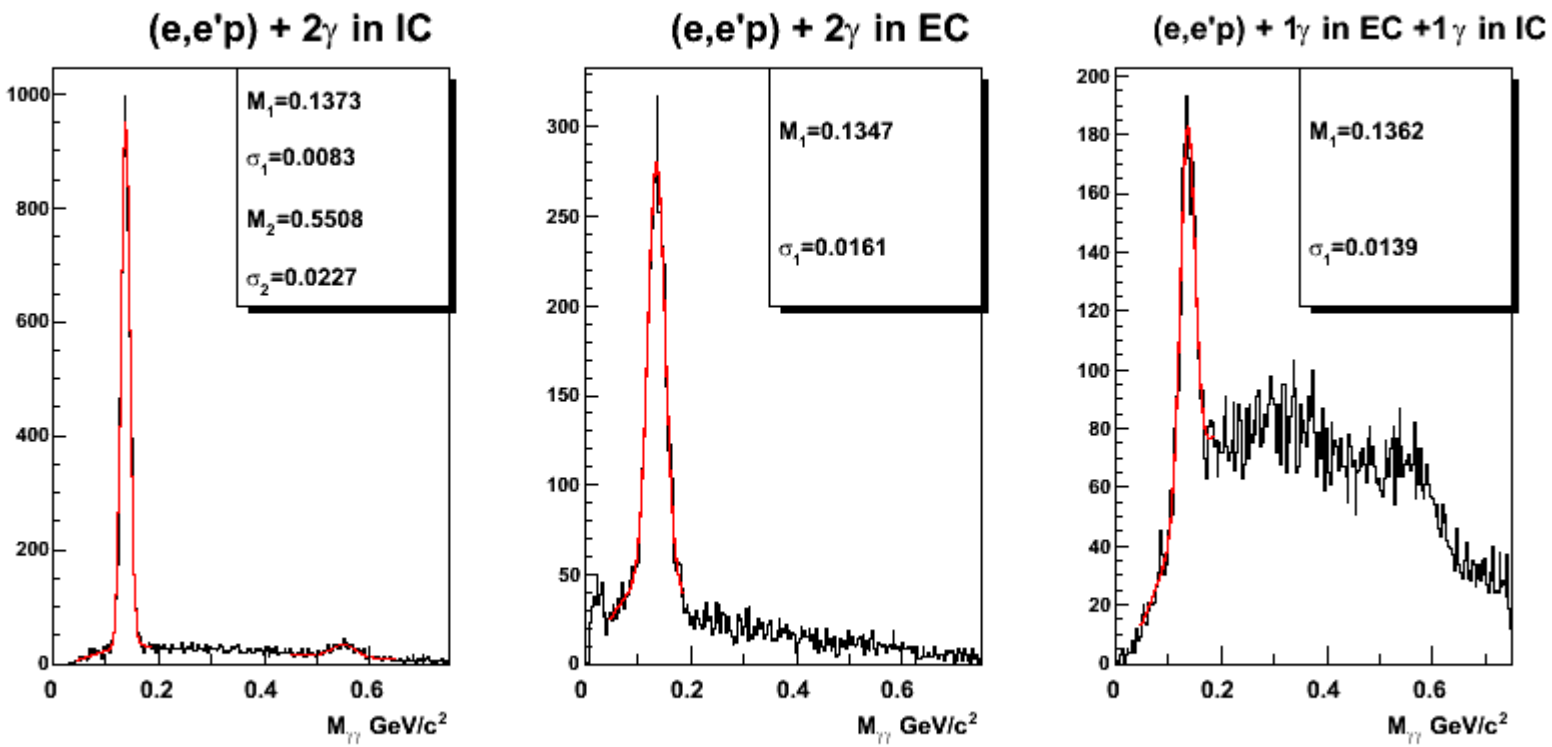

Preliminary

E1 - DVCS Experiment – First round

Approved total beam time:	60 PAC days
Proposal integrated luminosity:	100 fb^{-1}
Accumulated luminosity:	36 fb^{-1}
Beam polarization:	
- Proposed	75%
- Achieved	76-80%

(the higher number is due to use of super lattice cathode)

Maximum Luminosity:

Goal:	Luminosity on H_2	$2x10^{34}cm^{-2}s^{-1}$
Achieved:	Luminosity on H_2	$1.7x10^{34}cm^{-2}s^{-1}$
	Luminosity total:	$2.5x10^{34}cm^{-2}s^{-1}$

[*2.5cm lH_2 + 0.0116 cm Al +50 cm air]*

Luminosity total (H_2 equiv.): $2.2x10^{34}cm^{-2}s^{-1}$!

Hall B - BoNuS Experiment - CLAS

- Measurement of "free" neutron structure through detection of spectator proton in Radial TPC.

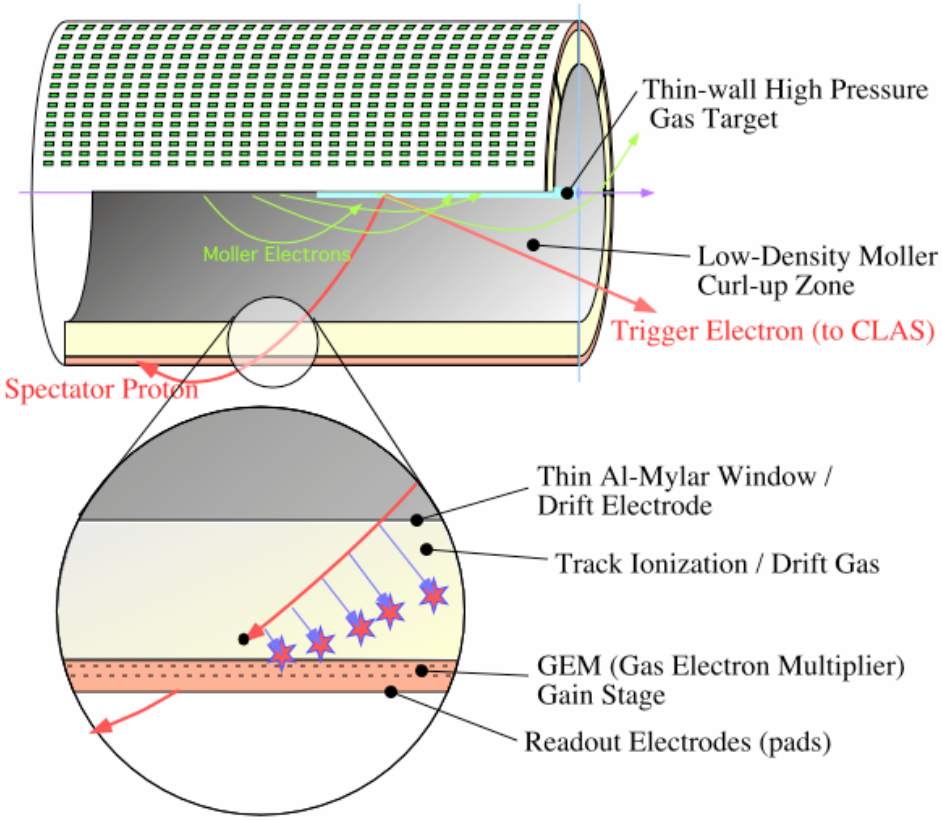

RTPC mounted in Hall B before Inserting

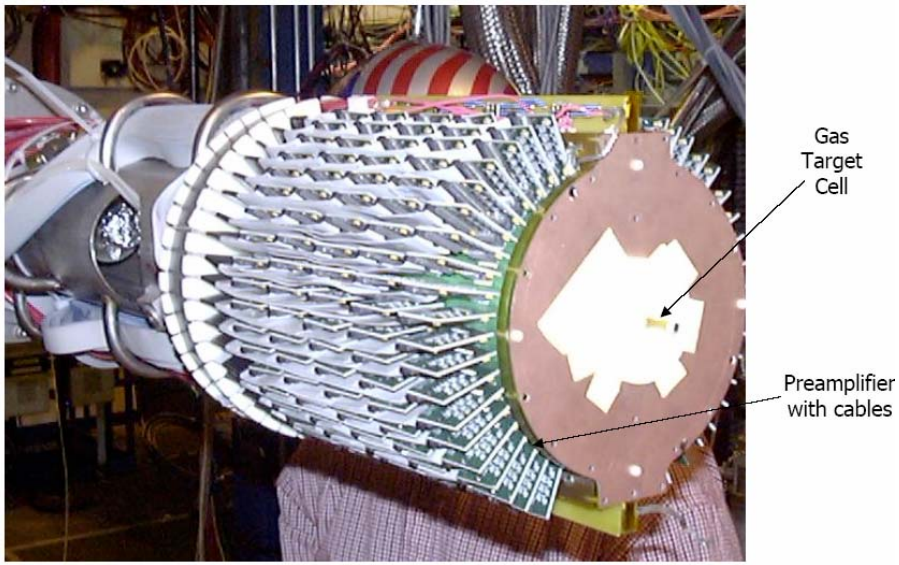

BoNuS Status CLAS Collaboration Meeting June 2005

RTPC ready to be installed

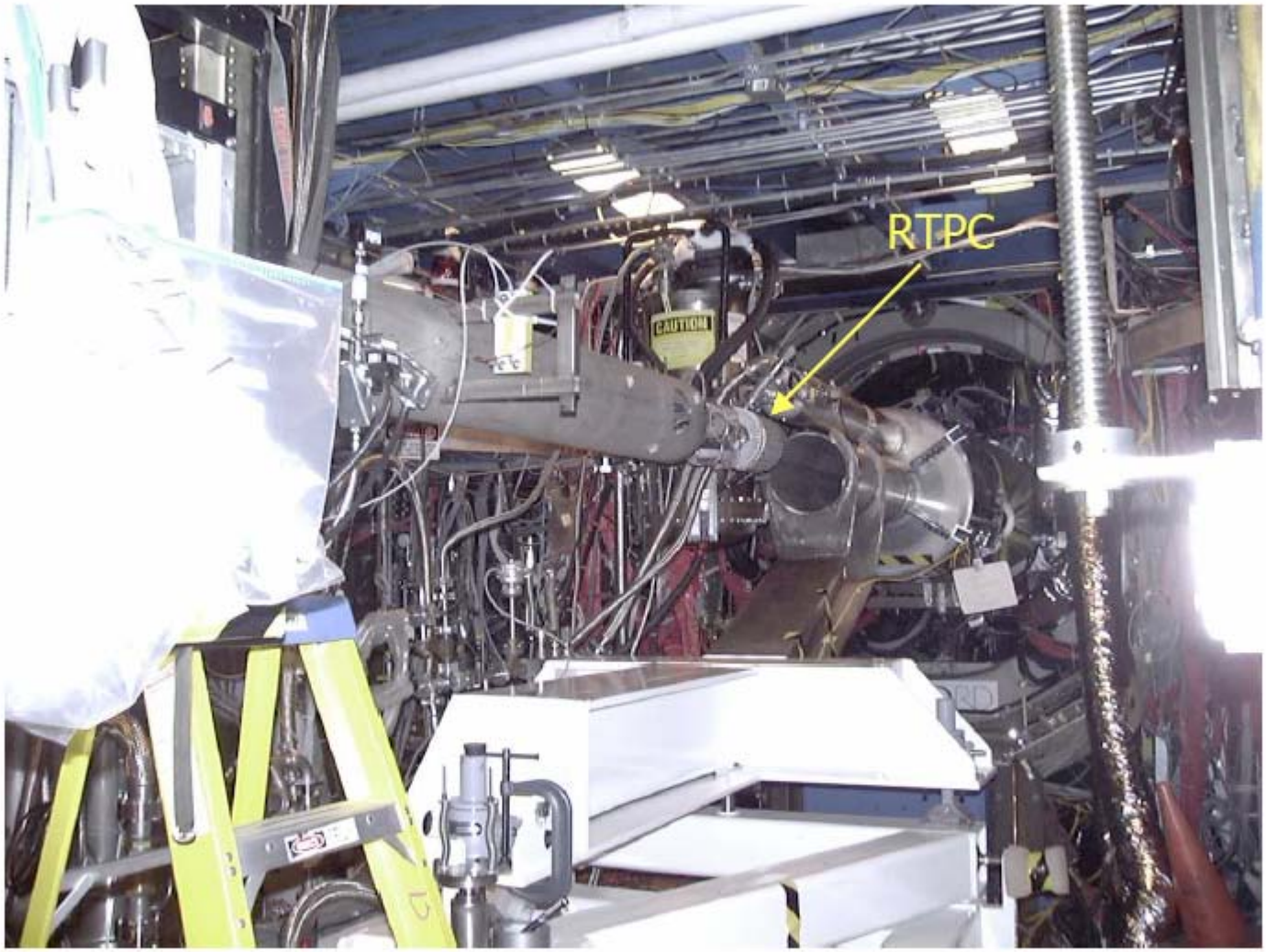

BoNuS Target cell and Single Event Display

Kapton straw of 4mm ϕ
filled with 7 atm H_2, D_2 gas.

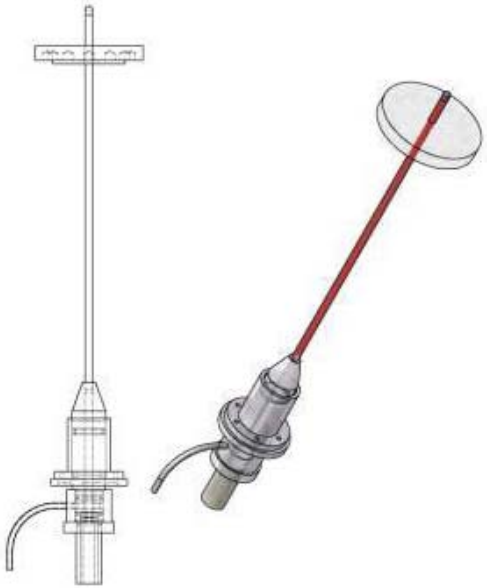

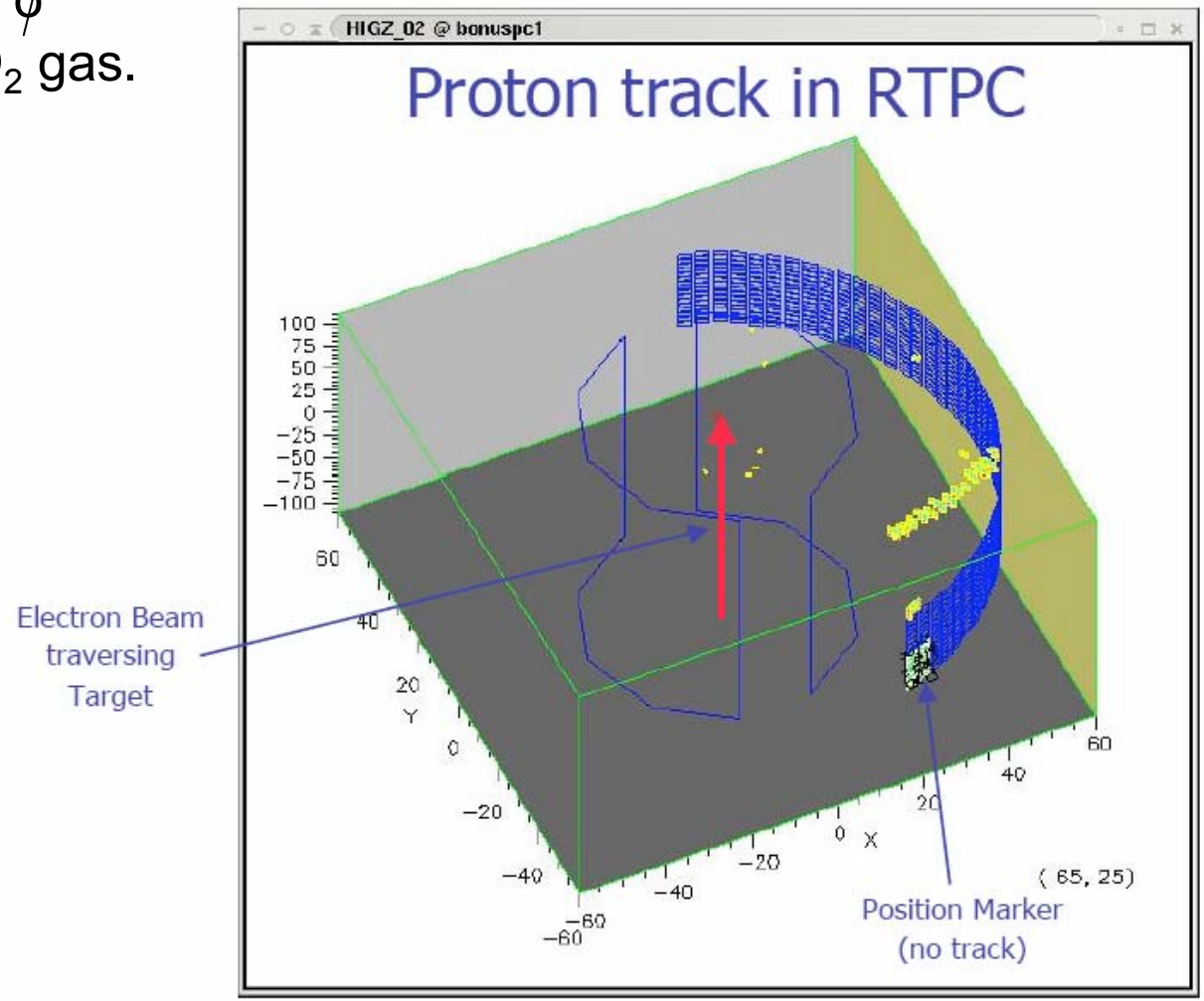

Near- and Long-Term BoNuS Plans

- Modifications to RTPC (mounting-) design
- Increase DAQ rate and include all 3200 readout channels
- Analyse data sample collected with CODA and standalone DAQ (triggered by CLAS L1)
- Develop more online monitoring tools and analysis software
- Possibly increase diameter of gas target cell
- Add short downstream BOM with a few optical fibres for improved beam steering?
- Improve gas handling system

- Reduce interactions in air downstream of target (3-4 times more material than in production target !)

Hall B Run Plan

Run group	PAC time	PAC rating	Target	Energy (GeV)	Electron polar.	Comment
BoNuS & SVT	(7)	A-	D2	4.5	-	SC Solenoid
g8b	29	A-	H2	4.5	-	Goniometer, polarimeter
e8-BoNuS	25	A-	D2 gas	4 & 6	-	Radial TPC
Tentative						
eg4 (GDH)	20	A	NH3	1.2-4.0	High	New Cerenkov
Unscheduled						
g12	35	A	H2	>5.75	-	
e1-DVCS(b)	35	A	H2	>5.75	High	Solenoid, IC
g9-Frost	87	A-	Butanol	various	High	Frozen spin target
eg2b	11	B+	nuclear	> 5	-	
TPE experiment	5	A-	H2	>5.75	-	Major change in set up
Σ (unscheduled)	249 (168)					

Hall B 2005-2007 Schedule

Date	Experiment	days	Energy (GeV)	Rating	Polarization?
06/20 - 09/02/05	g8b	29	4.5	A-	-
11/ - 12/10/05	e8-BoNuS	25	4, 5.4	A-	-
Plan for reduced accelerator/Hall operation assuming 60-70 days of PAC running					
2006					
	eg4-GDH	20	1.1–3.2	A	High
	g12	35	5.76	A	-
2007					
	e1-DVCS(b)	35	6	A	High
	g9a-Frost	35	1.5 – 3.2	A-	circ/ linear
2008					
	g9b-Frost	52	1.5 – 3.2	A-	circ/linear
	TPE	5	>5.75	A-	-
	eg2c	10	4-6	B+	-

Drift Chamber Issues

- In early phase of E1-DVCS significant problems with beam stability resulting in frequent trips of DC HV due to high dark currents in some areas of region 2 and region 3.
  - Beam Offset Monitor in Fast Shut Down
  - Increase gas flow through chambers
  - Reduce humidity around chambers

- Region 1 has two large dead areas that impact track reconstruction efficiency in two sectors.
  - To fix problem we may have to remove chambers during next long machine down time.

12 GeV Upgrade

Major Goal: CD-1 in FY2005

Sequence of events:

- ✓ DOE Science Review: April 11-13, 2005 – no report yet, but high praise received from panel and DOE reviewers
- ✓ Director's Project Review (internal) May 6-8, 2005

⇒ Independent Project Review: July 12-14, 2005
(25 reviewers + DOE observers)

⇒ CD-1 approval September 2005 (Goal)

Personnel:

Will Brooks => Associate Project Manager for Physics
Latifa Elouadrhiri => Senior Team Leader for Hall B Upgrade

CLAS12

Re-using the Hall B infrastructure

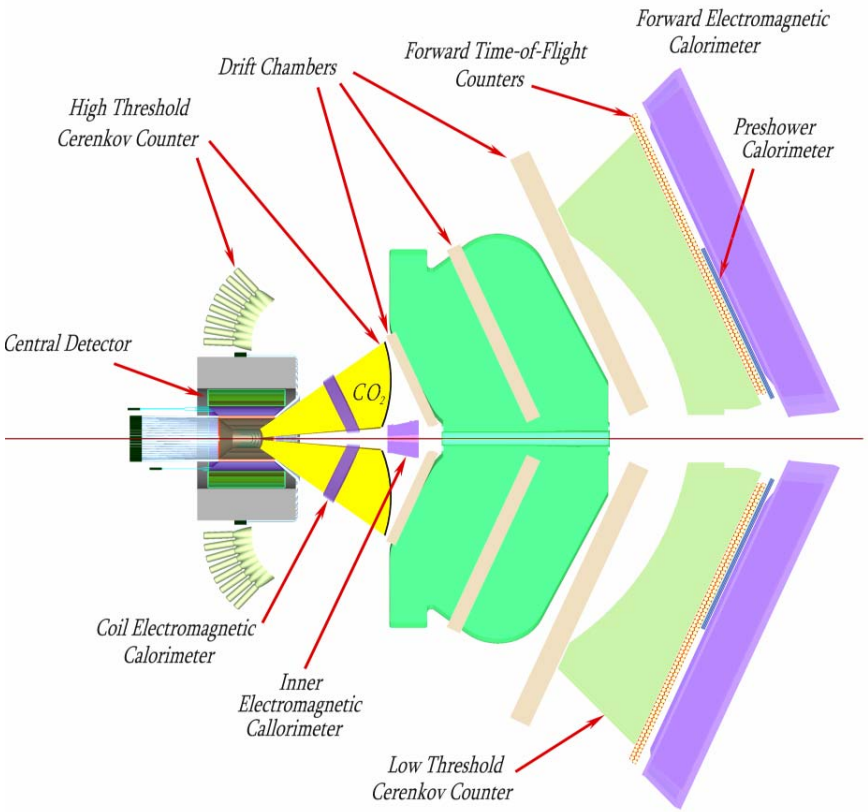

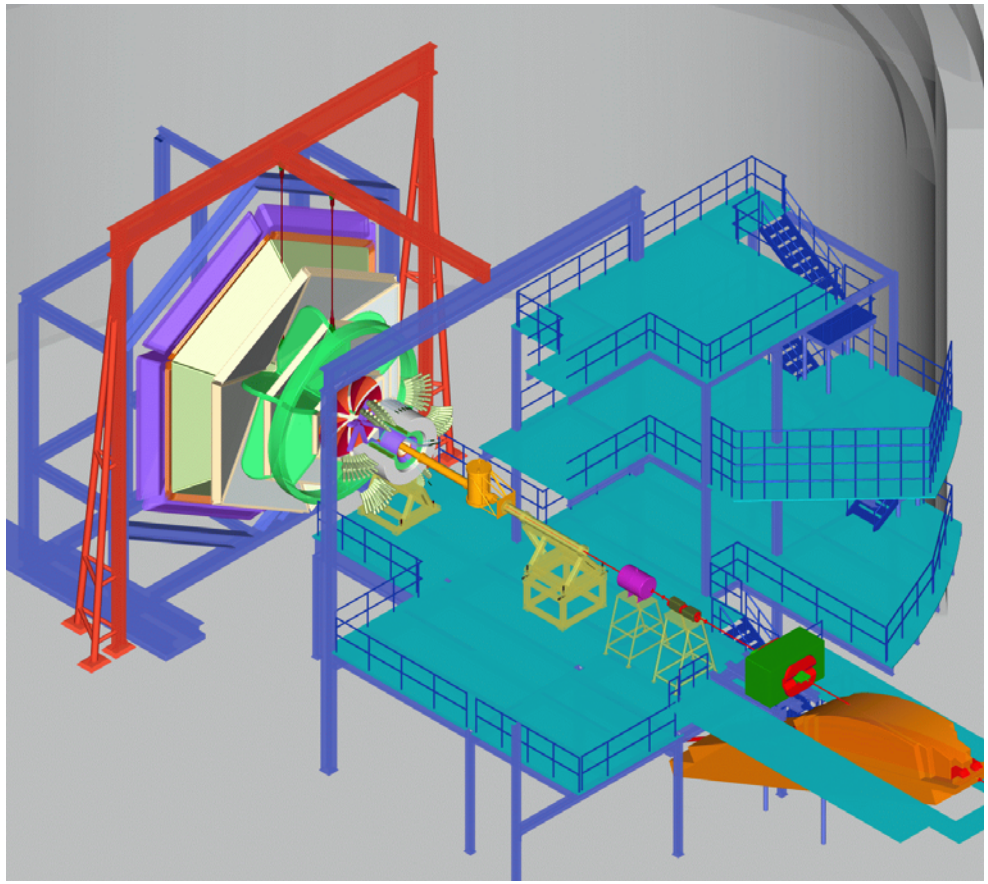

CLAS12 - Prototyping Effort

Component	Interested Institutions	Status
SVT	JLab, ODU, Fermilab,…	Testing of stave, signal readout, parasitic beam test, ongoing
Central TOF	KNU, JLab	CLAS note 2005 xxx, 2004-15, 2004-39 (NIM paper) Evaluating scintillators, light guides, PMTs
Forward TOF	USC, . .	Project R&D funds requested for FY06/07
Central EC (not currently in Project scope)	JLab, NSU,..	Prototype built and tested with cosmics, ~ 60 photoelectrons/MeV in SciFi
SC Solenoid	Saclay, ITEP	Design evaluation
SC Torus	ITEP	Design evaluation
HT Cerenkov	RPI, ITEP, …	Project R&D funds requested for FY07/08
Drift chambers	??	Project R&D funds requested for FY07/08
Pre-shower EC	Yerevan, ….	Project R&D funds requested for FY07/08

CLAS12 - CD Time-of-Flight

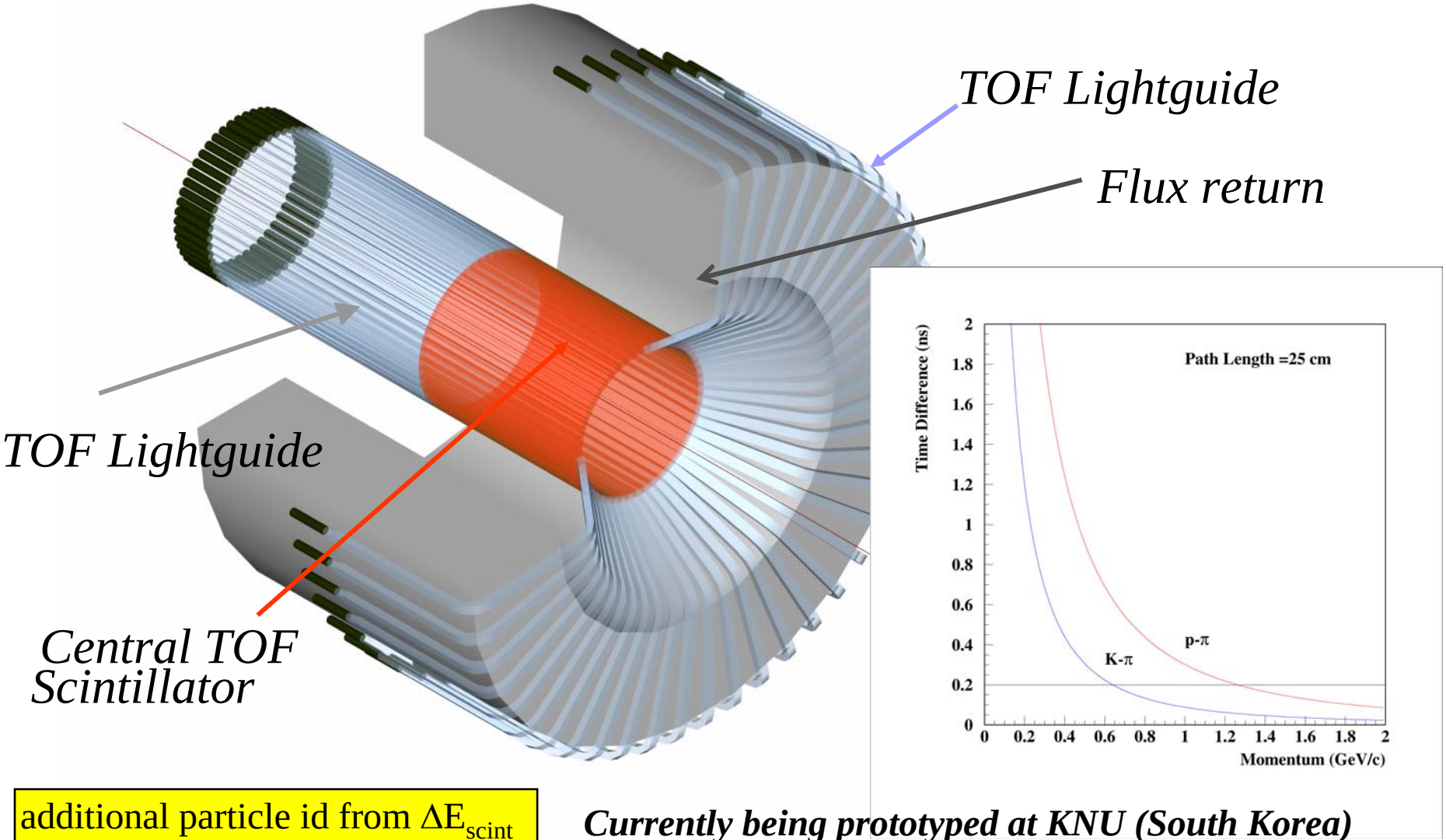

additional particle id from ΔE_{scint}

Currently being prototyped at KNU (South Korea)

KNU: Prototyping of CD TOF

CLAS notes: 2005 – xxx, 2004-016, 2004-039 (NIM submitted)

50cm scintillator with
1m long light guides

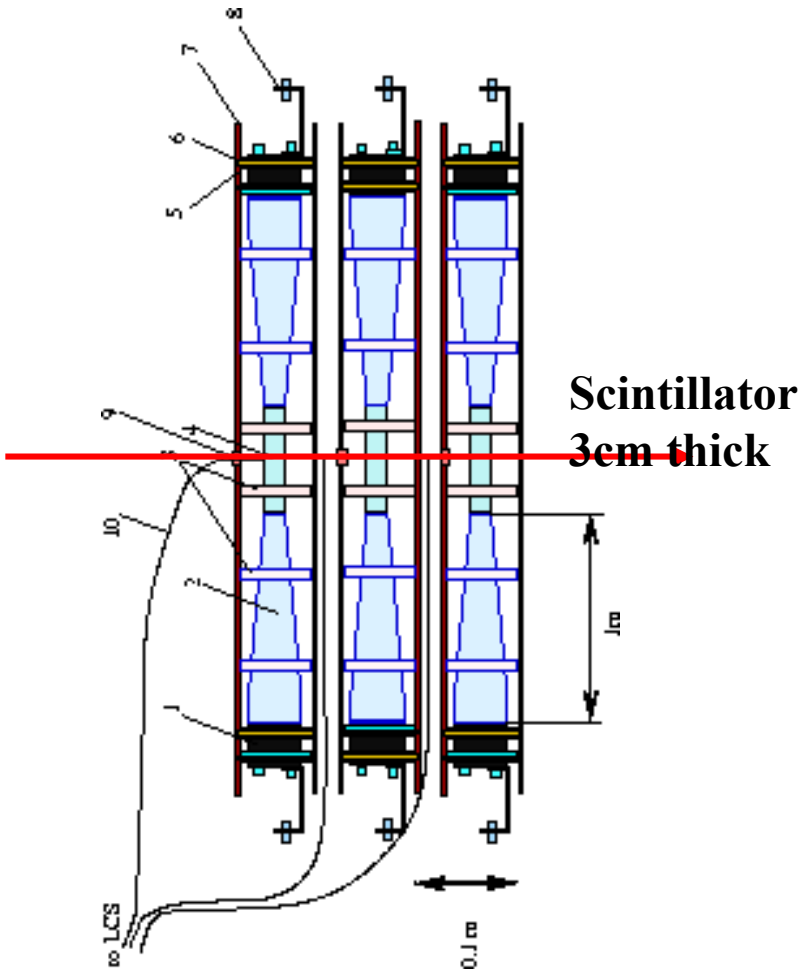

PMT resolution: $\sigma_{PMT} \sim 83$ps
Goal is 50ps with RF as reference.
Need improvement to $\sigma_{PMT} \sim 71$ps,
Gain $\sqrt{2}$ from RF.

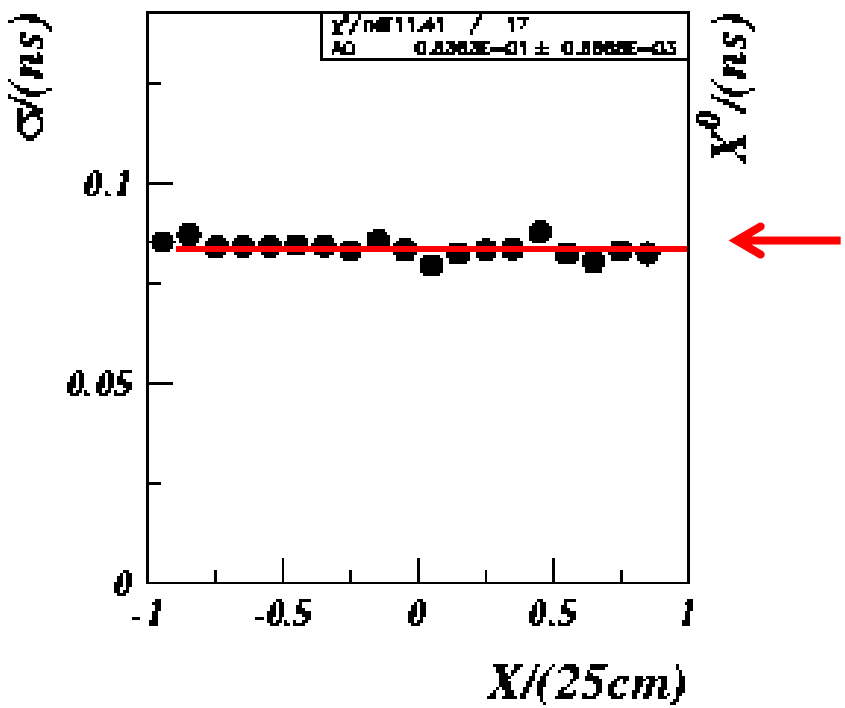

Resolution with short LGs: $\sigma_{PMT} \sim 60$ps

CLAS12 – Silicon Vertex Tracker

45,000 channels

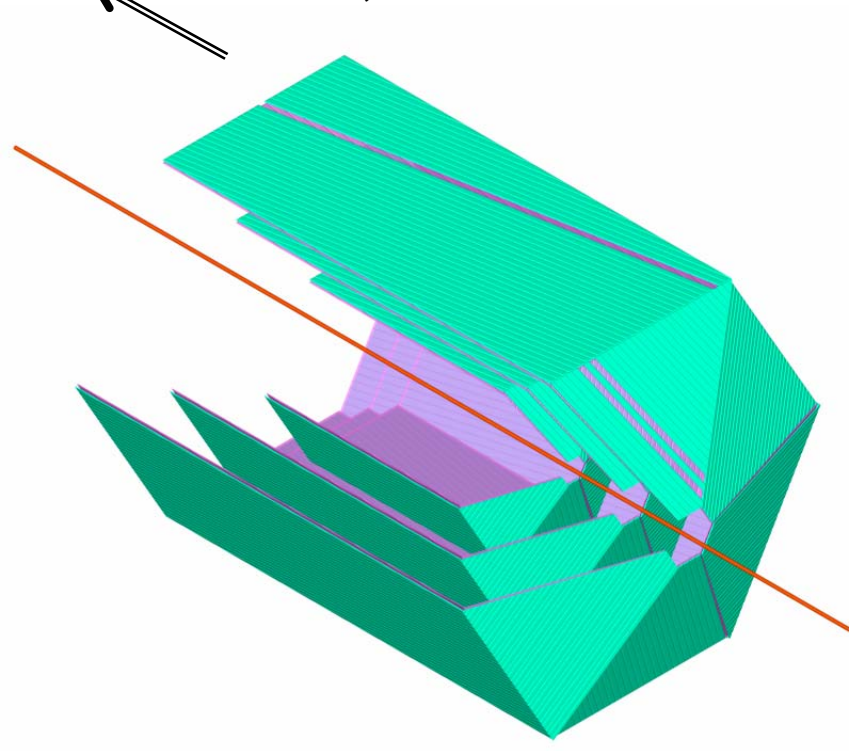

A 3000 strip SVT "stave" mounted on Saclay solenoid during test

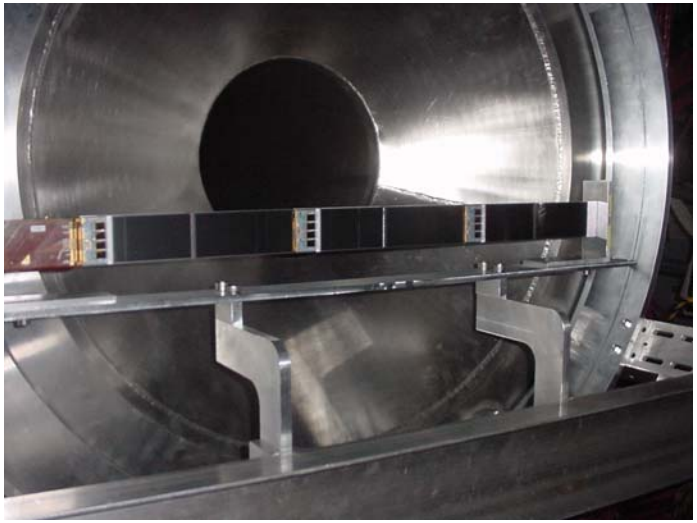

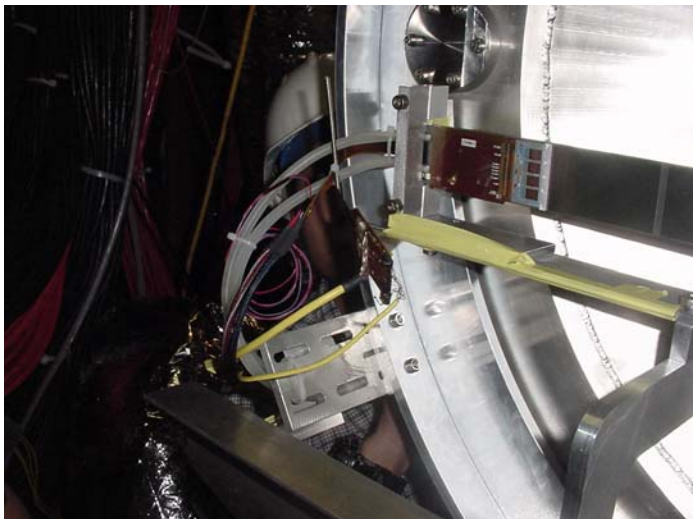

Silicon micro strip:
- -forward track reconstruction
- - large angle tracking
- - high rate operation near target

CLAS12 – CD Calorimeter

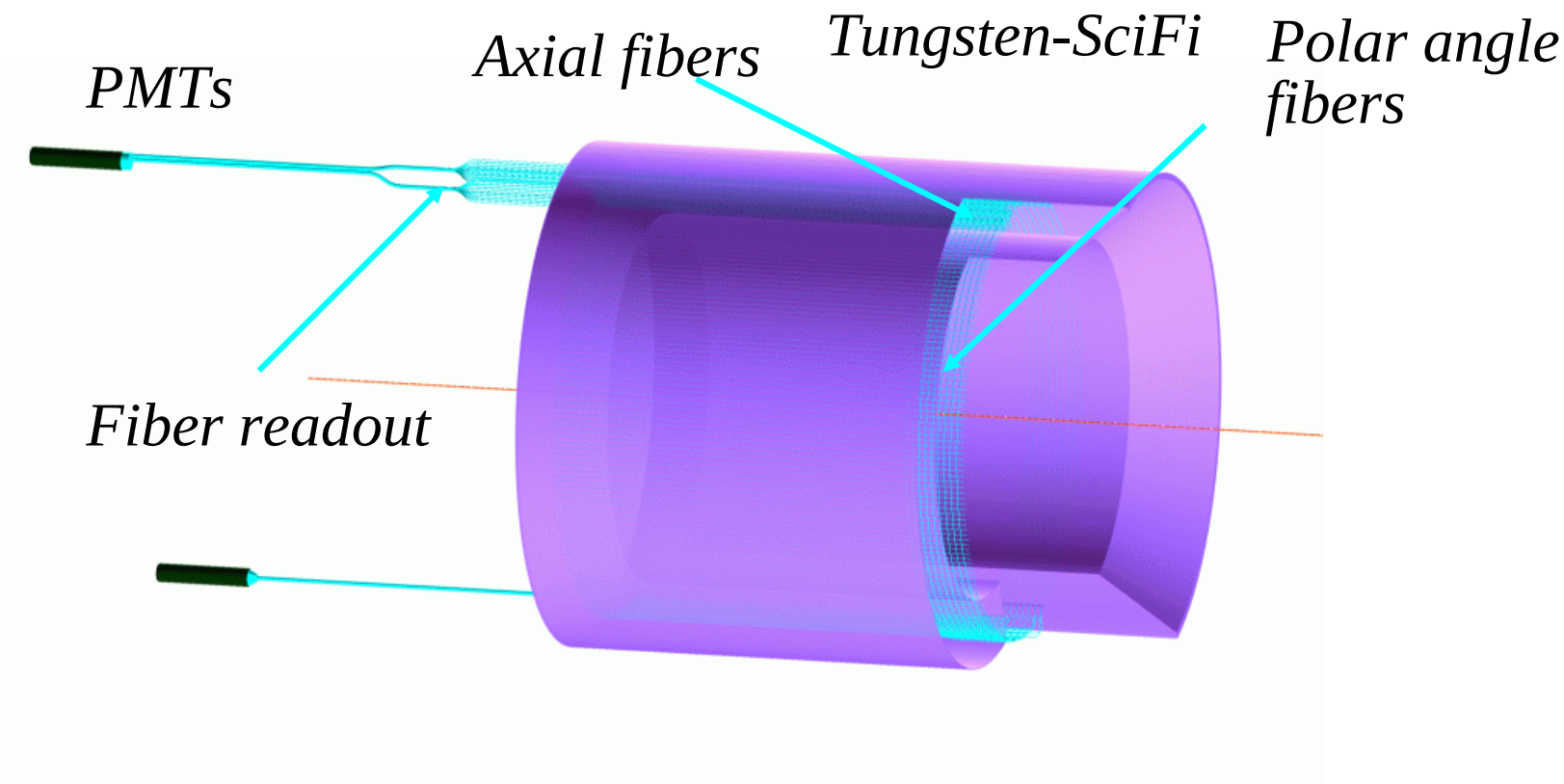

Tungsten-powder/SciFi calorimeter

5,500 SciFi
0.75 mm
diameter

Average
material
density
9 g/cm^3

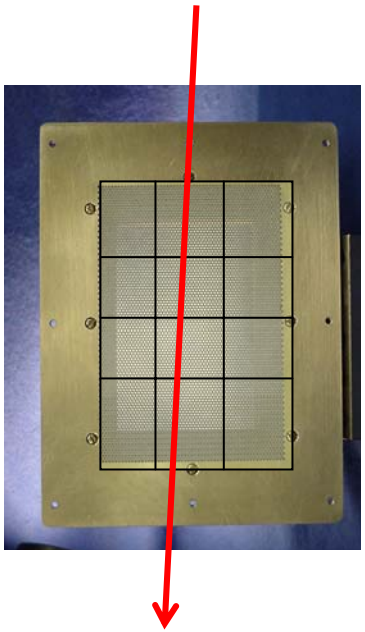

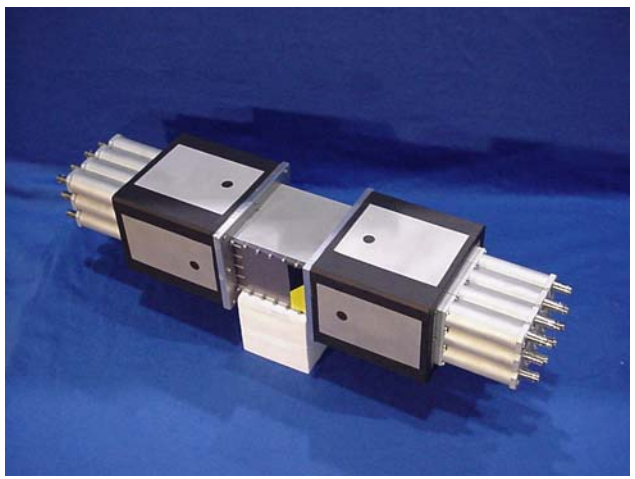

Radiation length = 1 cm

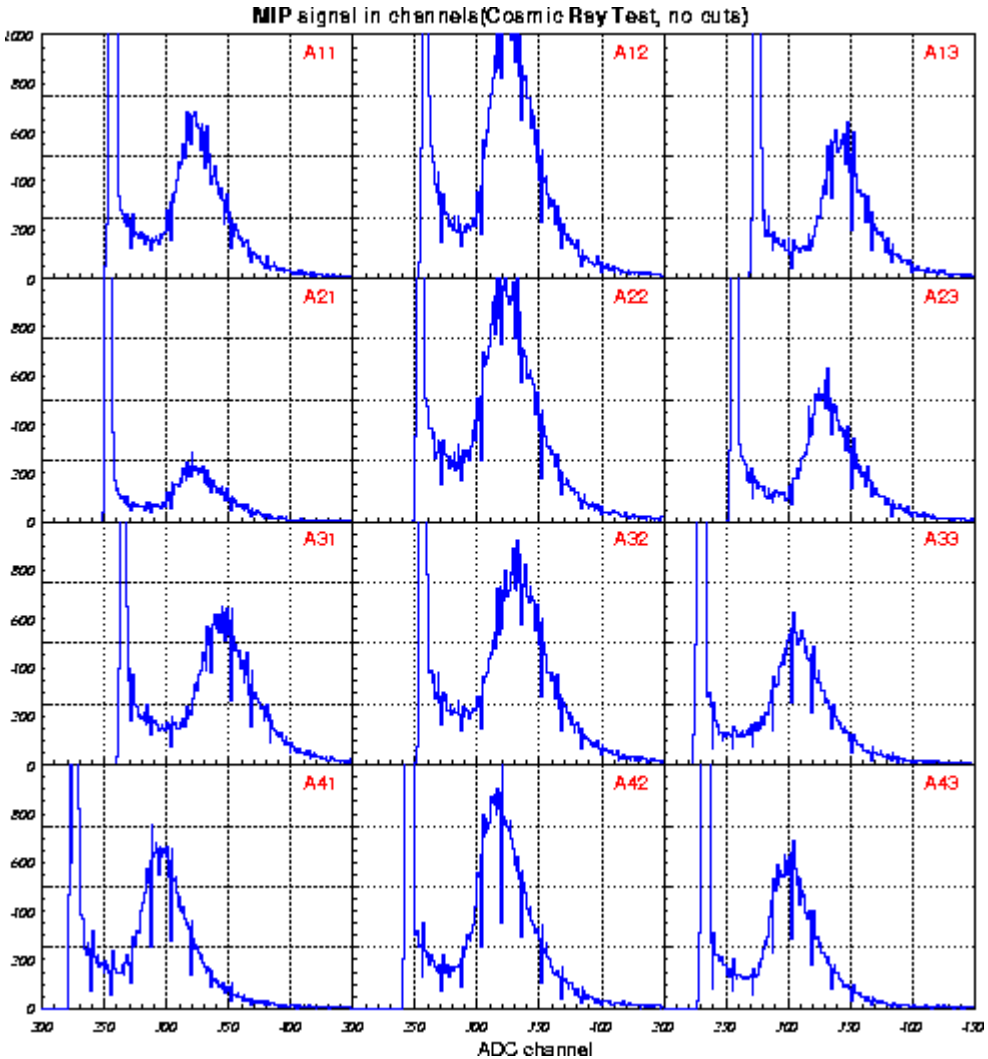

~60 p.e./1.5MeV in SciFi

CLAS as a neutral particle detector?

$\vec{\gamma}\vec{p} \Rightarrow \pi^0, \pi^0\pi^0, \eta, \omega(\gamma\pi^0)$

Coverage for γ detection from 3° - 135^0

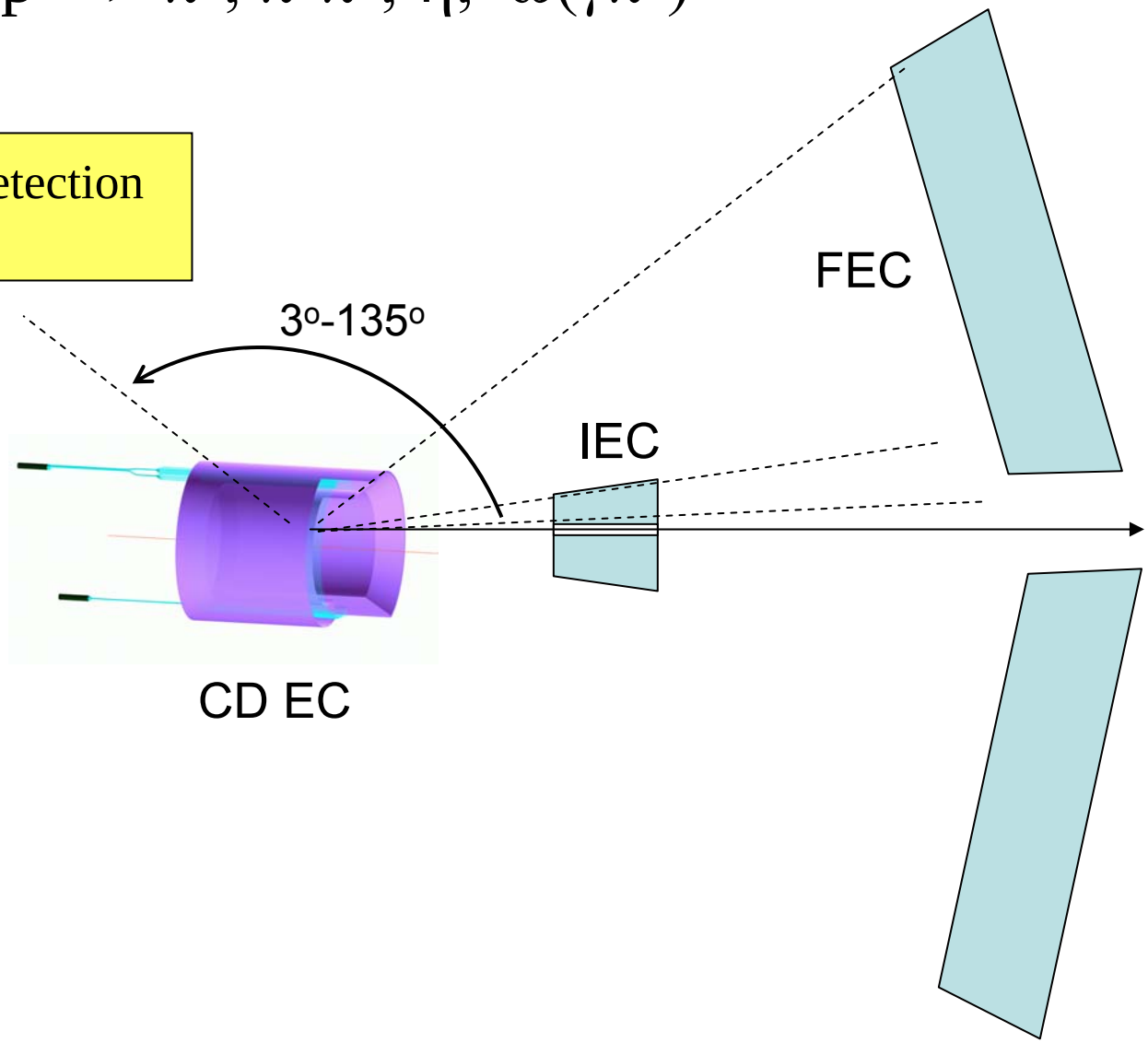

PAC27/28

- Frozen spin target experiments: PAC27 emphasized that the FST program needs organizational structure with coordination, distribution of responsibilities, detailed plan for data runs to optimize output, analysis plans, possible inclusion of other collaborators. Data runs cannot be scheduled without detailed plans.

- PAC28: Hall B backlog is currently below the nominal 3 years (assuming 100 days/year). We plan on Hall operation until 2010. We need well developed, high class physics proposals that truly enhance the JLab physics program.

- New instrumentation should also be useful for 12 GeV upgrade (e.g. transverse polarized target, low Q^2 tagger, vertex tracker, calorimeter, …) . This is especially important if the expected budget cuts will be realized in the coming years.